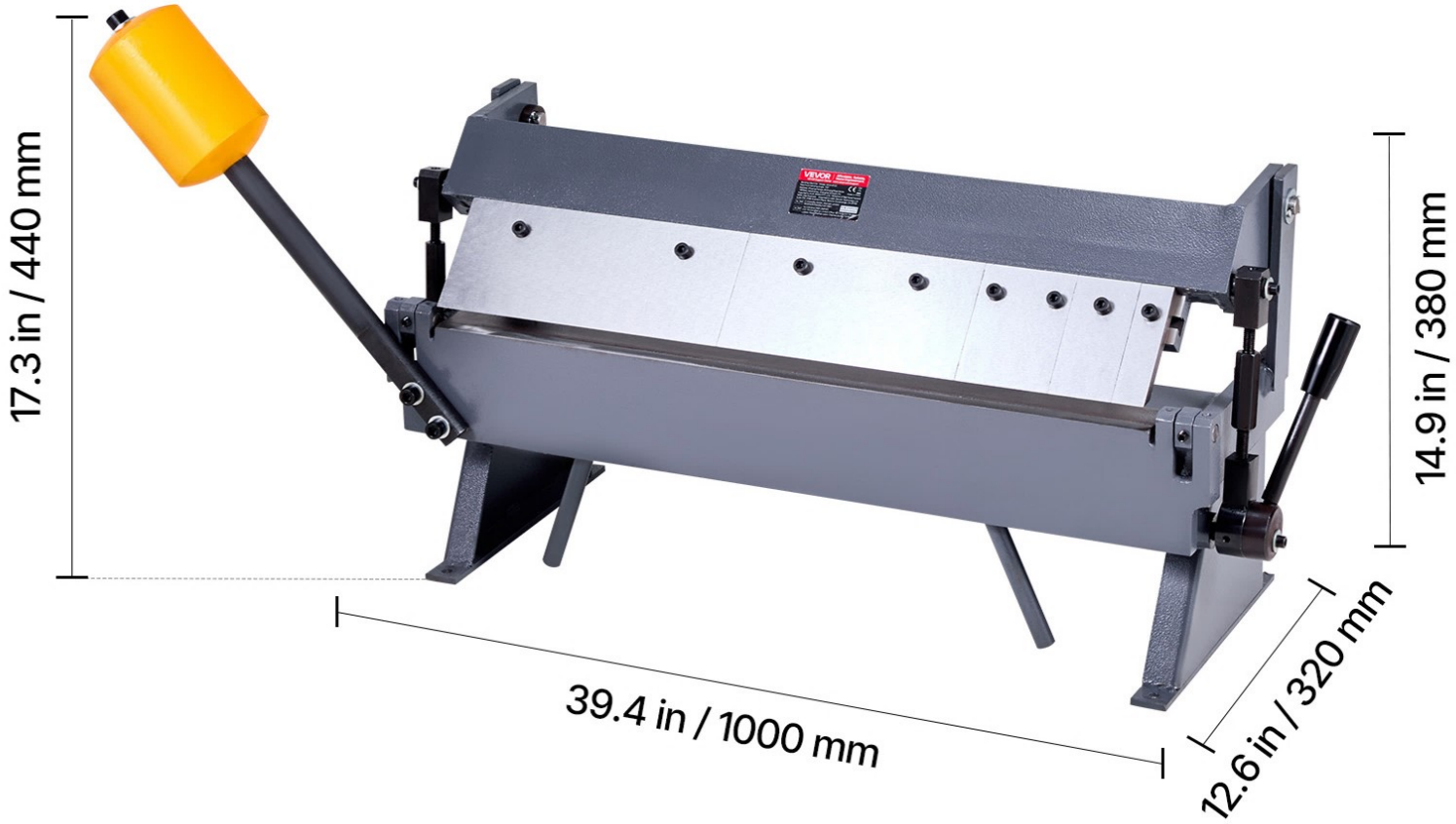
17.3 in / 440 mm
14.9 in / 380 mm
39.4 in / 1000 mm
12.6 in / 320 mm