25" Ceramic Vanity Top

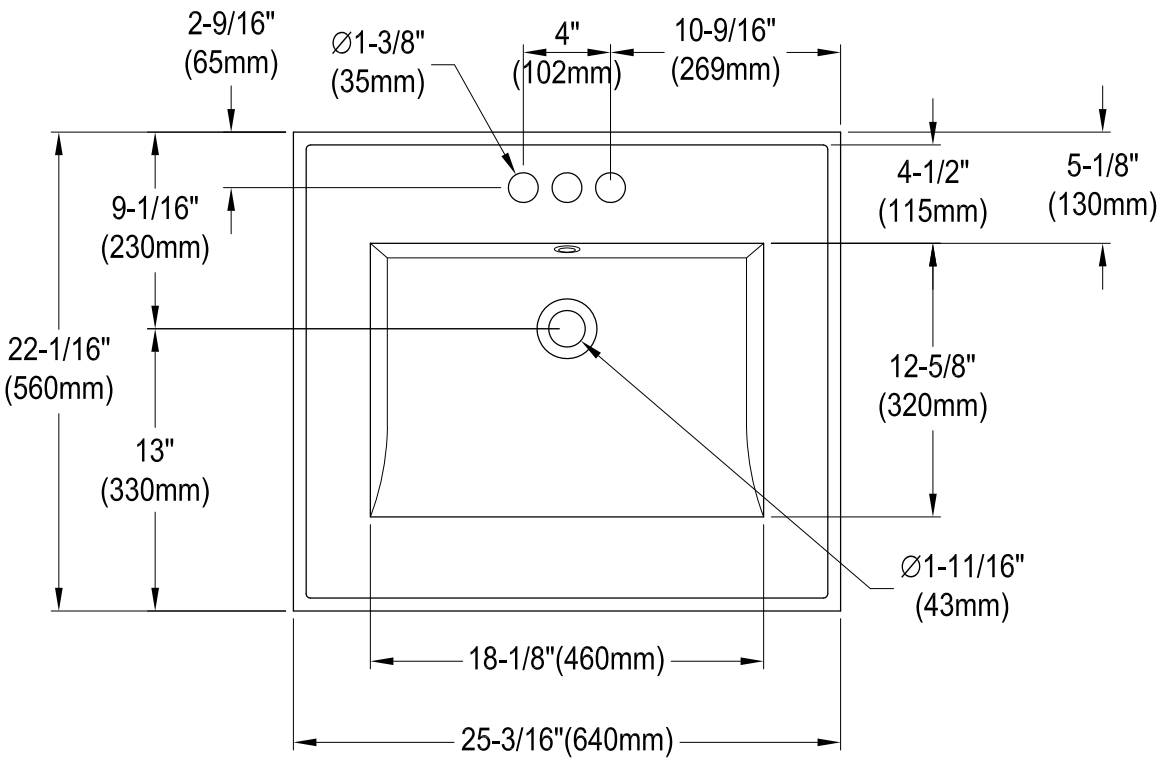

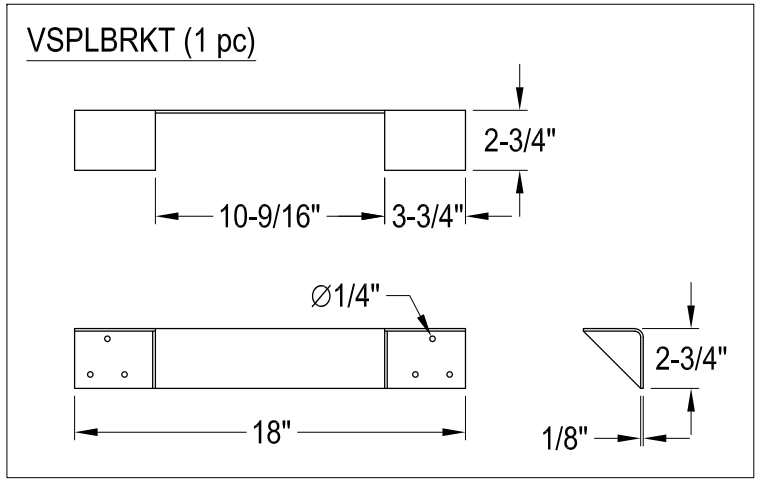

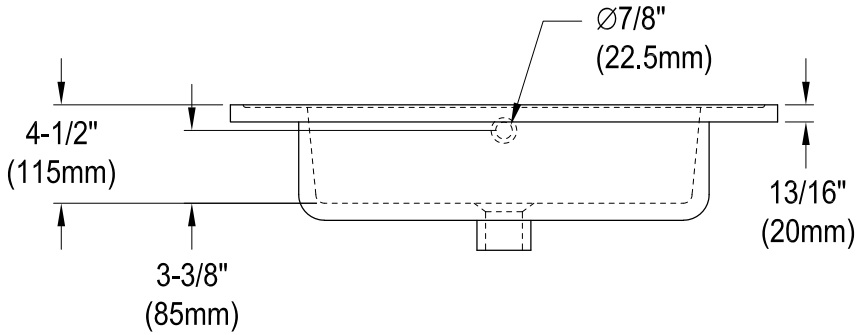

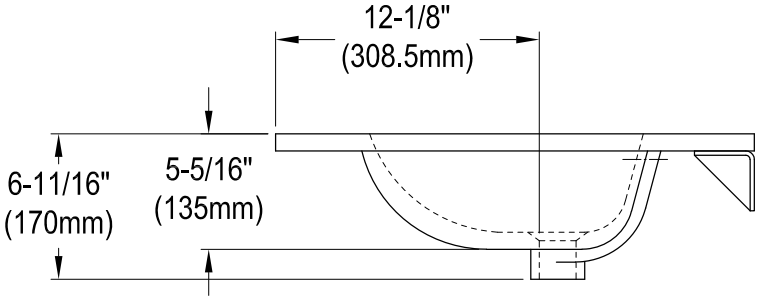

2021-02-B