Essentials
BY OFM

Model No. ESS-1050-BLK

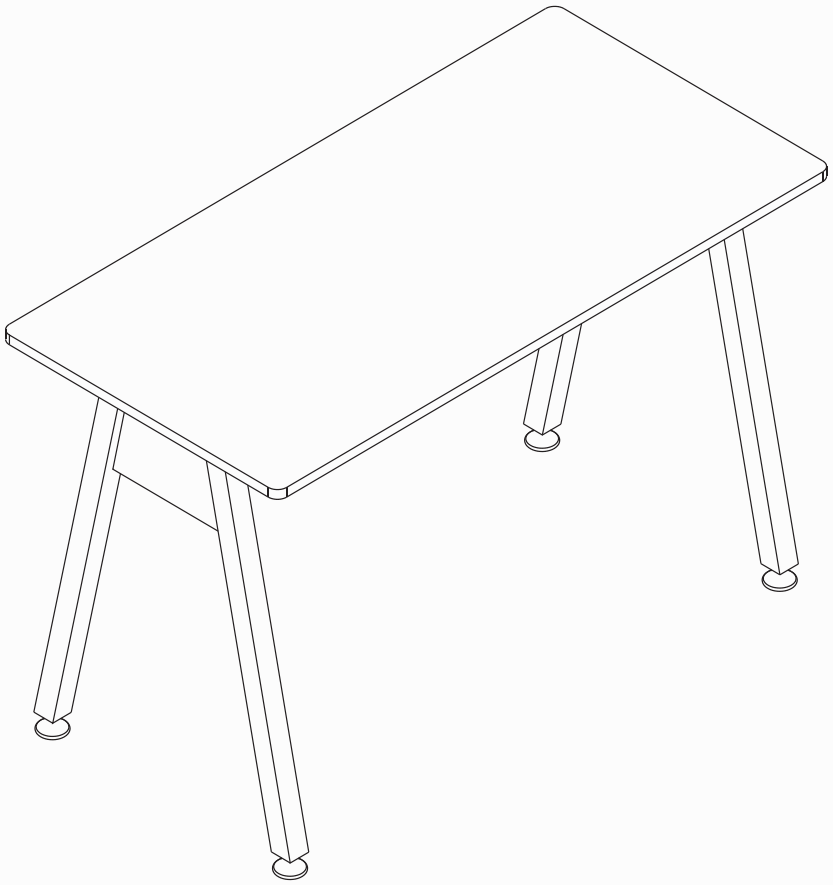

ATTENTION / ATTENTION / ATENCION

Make sure all bolts and screws are fully tightened before using desk . Lubricate all moving parts and tighten all bolts/screws every 6 month or whenever needed

S'assurer que tous les boulons et vis sont serrés à fond avant d'utiliser la bureau . Lubrifier toutes les pièces mobiles et serrer tous les boulons/vis tous les 6 mois ou selon le besoin.

Asegúrese que todos los pernos y tornillos estén completamente apretados antes de usar la escritorio.Lubrique todas las piezas móviles y apriete todos los pernos/tornillos cada 6 meses o como sea.

⚠WARNING / AVERTISSEMENT / ADVERTENCIA

To ensure proper assembly, follow all steps and use all parts. Failure to follow this warning can result in serious injury to yourself or others.

Effectuer toutes les opérations et utiliser toutes les pièces pour être sûr que l'assemblage est correct.L'inobservation de cet avertissement peut entraîner des blessures graves pour soi ou pour les autres.

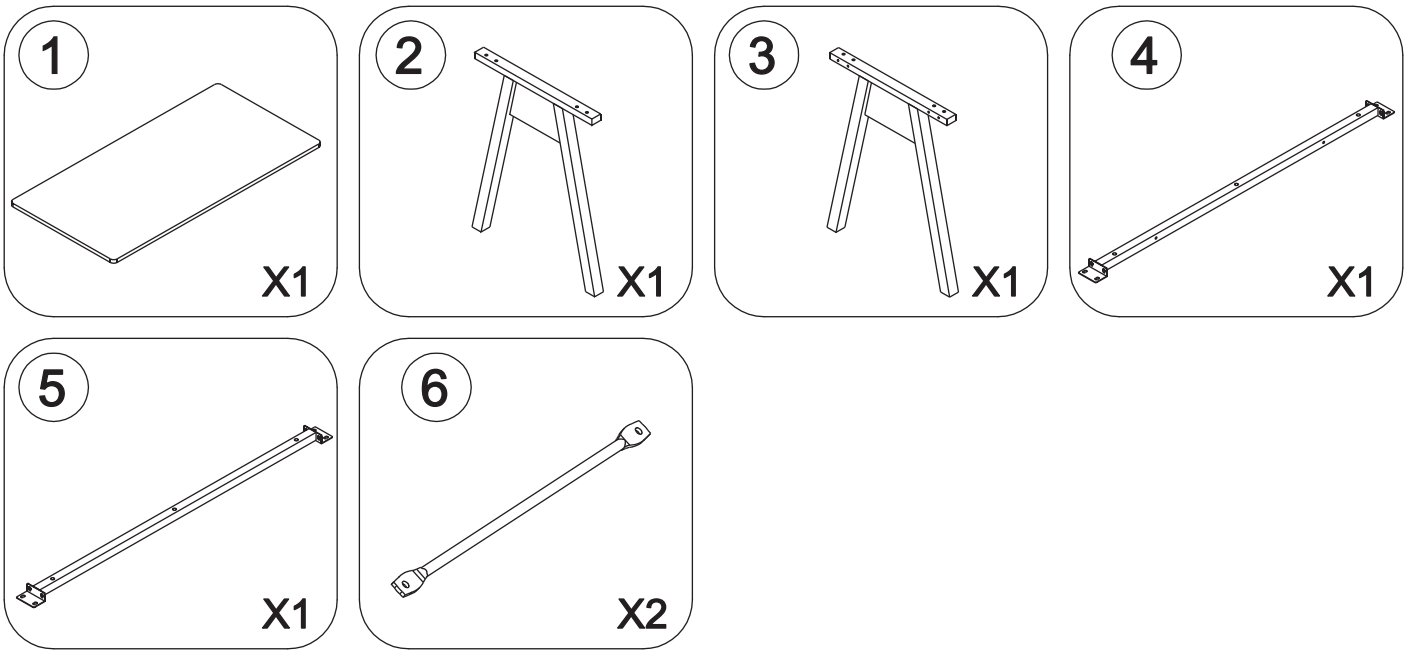
1
X1
2
X1
3
X1
4
X1
5
X1
6
X2

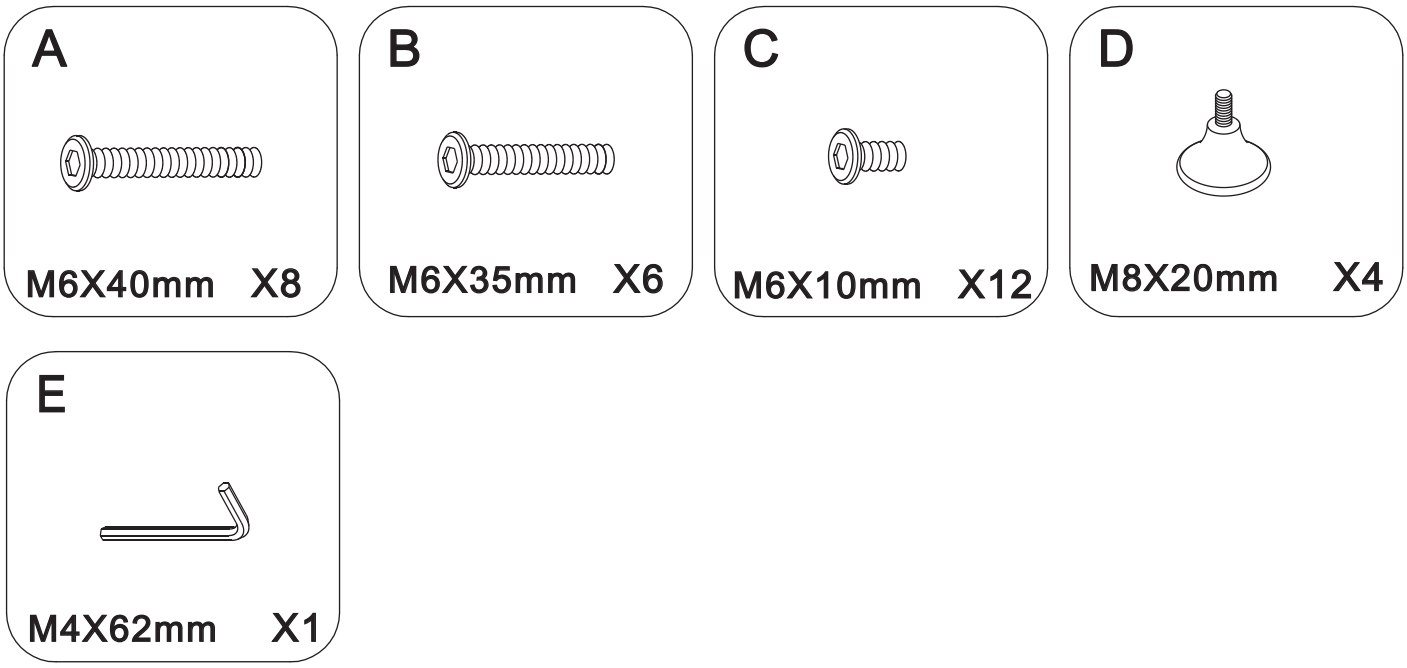
A
M6X40mm X8
B
M6X35mm X6
C
M6X10mm X12
D
M8X20mm X4
E
M4X62mm X1

1

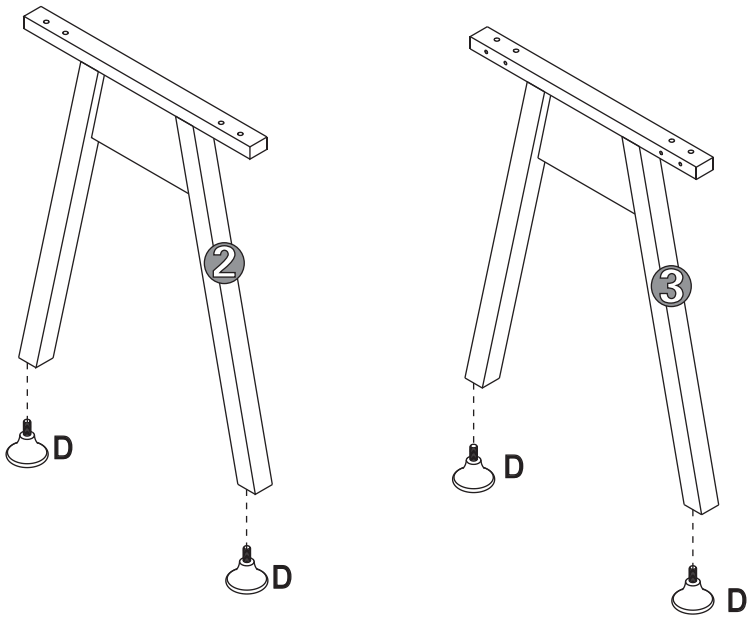

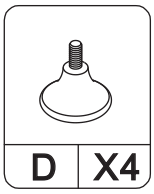

2

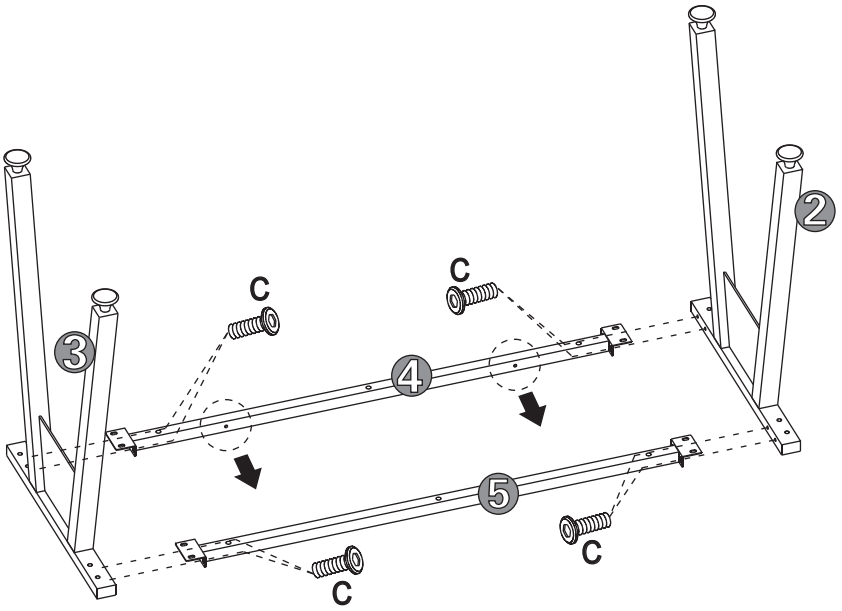

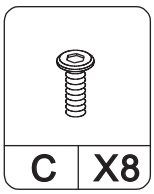

3

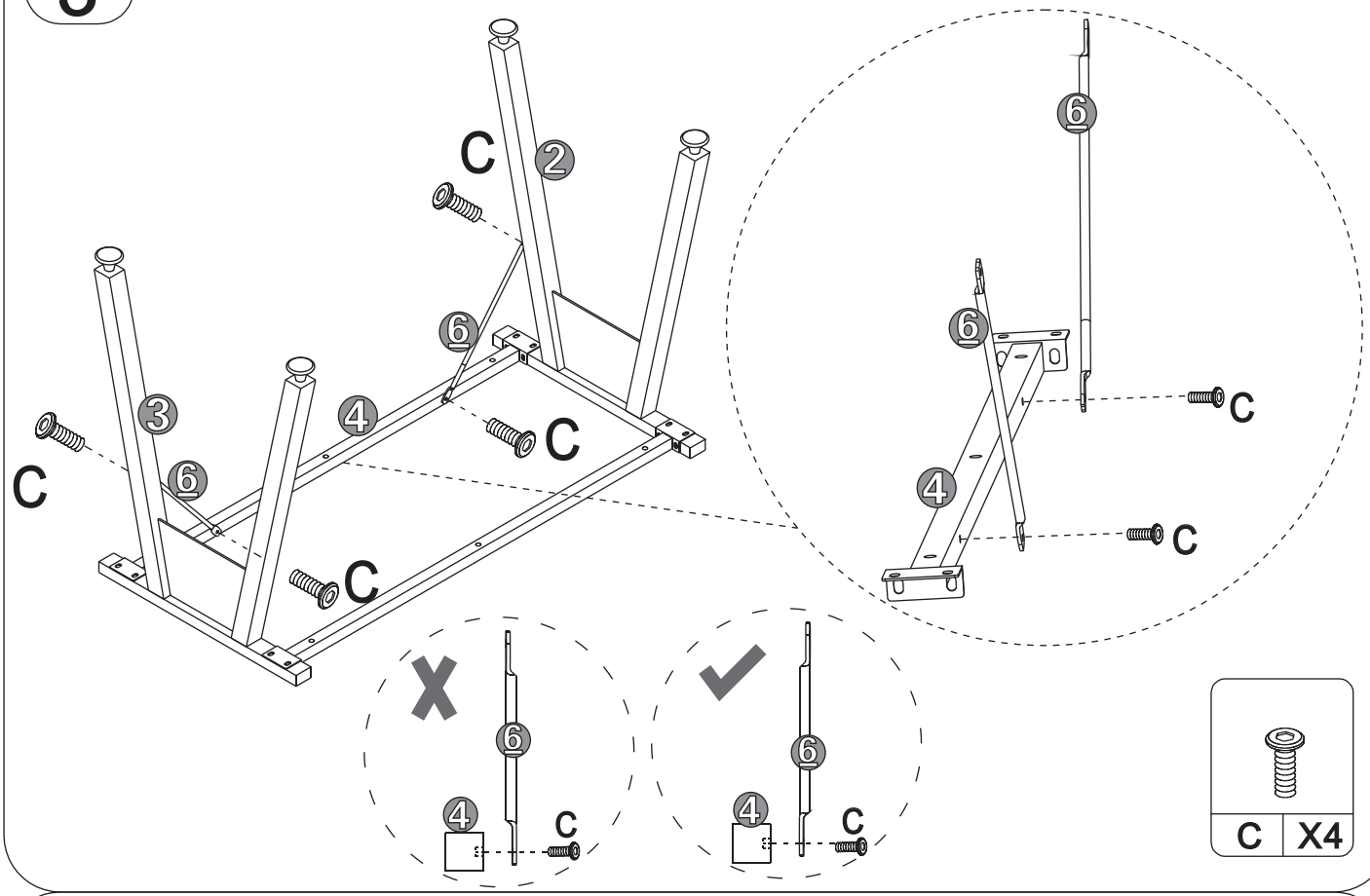

4

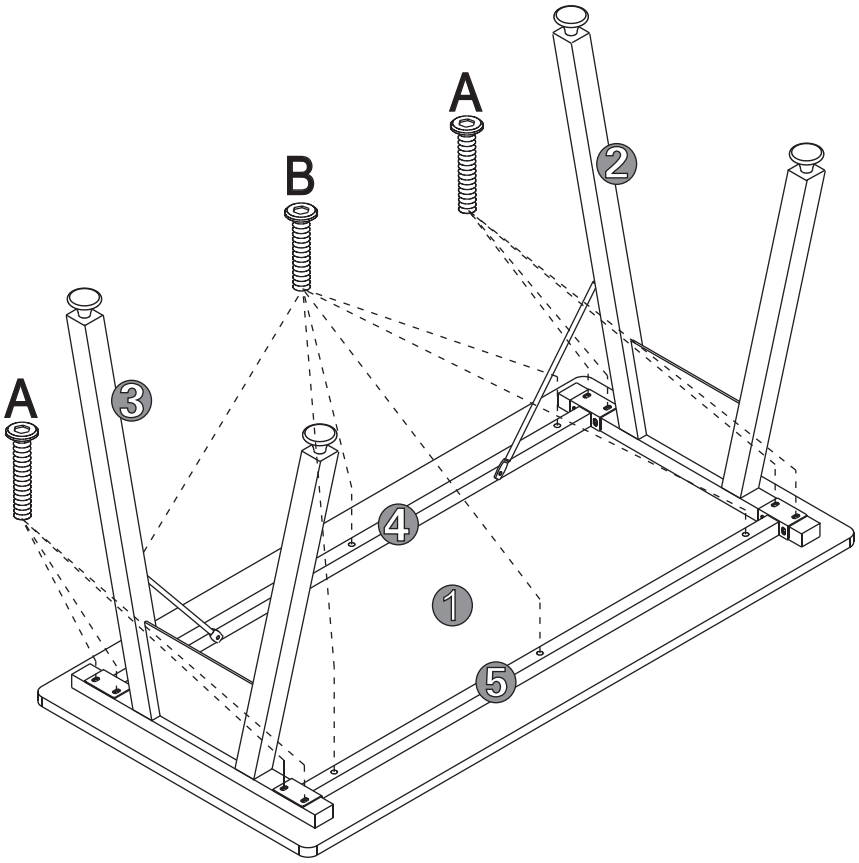

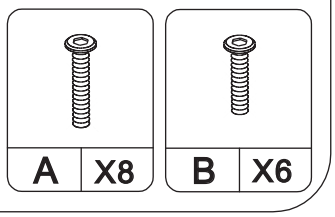

LIMITED LIFETIME WARRANTY

OFM hereby warrants that the products distributed by it shall be free of all defects in original material and workmanship for the life of the product provided the product has only been used under Normal Commercial Use. OFM will repair or replace, at our option any product or component that is defective in material or workmanship. This warranty only applies to products purchased directly from an authorized OFM dealer, and is valid for the original purchaser only.

EXCLUSIONS TO THE WARRANTY ARE AS FOLLOWS:

- Normal wear and tear, which are to be expected over the course of ownership
- Damage resulting from shipment, which will be handled under separate terms
- Damage resulting from storage, alteration, unauthorized repair, infestation, misuse, abuse, accident, acts of God, natural causes, and/or exceeding listed capacities
- Products used for rental purposes
- Failure to provide reasonable and necessary maintenance* (according to product instructions)
- Transportation and labor costs associated with warranty replacements

SEATING:

All seating is covered under warranty for the life of the product under normal use. Limitations involving materials and components are:

- 2 years all fabric and upholstery materials
- 7 years gas lifts
- COM fabric is not covered under this warranty

OFM does not warrant the color-fastness or matching of colors, grains, textures of covering materials.

Normal Commercial Use for Seating is defined as 8 hours a day, 5 days a week with a weight capacity not to exceed 250 lbs. The models listed below are rated for a 400 lb. & 500 lb. weight capacity:

400 lbs.

- Model ORO200
- Model 407's
- Model 409's
- Model 700
- Model 710
- Model 711
- Model 800-L
- Model 812-LX
- Model 841
- Model ESS-200
- Model ESS-202

500 lbs.

- Retro Bench
- Model 300-XL
- Model 810-LX
- Model 811-LX
- Model 821
- Model 822
- Model 831
- Model 832
- Model 2201
- Model 2202
- Model 4001C
- Model 4003C
- Model 4004C
- Model 5000L
- Model 5000LE
- Model 5000R
- Model 5000RE

OFM offers many models covered under warranty for a 24-Hours a day, 7 days a week usage. All standard seating limitations listed above still apply to this category of seating except the Normal Commercial Use limitation. The models listed below are rated for a 250 lb. & 400 lb. weight capacity with 24-Hours a day use:

250 lbs.

- Model 241 (All)
- Model 242

400 lbs.

- Model 247
- Model 247-VAM

TABLES AND DESKS:

All tables and desks are covered under OFM's Limited Lifetime Warranty. Limitations involving materials and components are as follows:

- 10 years frames
- 5 years tops

PEDESTALS:

All pedestals are covered under OFM's Limited Lifetime Warranty. Limitations involving materials and components are as follows:

- 10 years full suspension glides

RIZE PANEL SYSTEM:

All panels and corner posts are covered under OFM's Limited Lifetime Warranty. Limitations involving materials and components are as follows:

- 10 years frames and frame welds
- 5 years vinyl and fabric panels under normal use

X5 AND X5 LITE SHELVING SYSTEM:

Normal usage for all X5 and X5 Lite Shelving Systems is defined as not over-exceeding the weight capacity per shelf (X5: 800 lbs. per shelf, X5 Lite: 300 lbs. per shelf, evenly distributed) along with using the system on no or low pile carpet to prevent any unbalanced track issues.

All X5 and X5 Lite components are covered under OFM's Limited Lifetime Warranty under normal use as defined above.

*Maintenance: check for loose screws every 6 months and tighten.

ESSENTIALS BY OFM PRODUCT LINE:

All product with the model numbers beginning with the characters ESS are subject to the additional limitations as follows:

- 2 years on all fabric and material
- 1 year on electrical systems used in "massage" chairs
- 2 years on any moving parts which would include but is not limited to chair mechanisms, casters, and gas lifts.
- 5 years on tables and desk frames
- 2 years on table and desk tops

NOTICE TO PURCHASER FOR HOME OR PERSONAL USE

Federal law does not permit the exclusion of certain implied warranties for consumer products. Therefore, if you are purchasing this product for home or personal use, the exclusion of implied warranties noted does not apply to you. Some states do not allow the exclusion or limitation of incidental or consequential damages, so the above limitations or exclusions may not apply to you. This warranty gives you specific legal rights, and you may also have other rights which vary from state to state.

This warranty applies only to products sold within the United States of America and the Commonwealth of Canada.

TERMS AND CONDITIONS

ORDERING INFORMATION:

All orders MUST be in writing. Please fax orders to 919-362-4765, email to sales@ofminc.com or contact us to set up EDI transmission. Purchase orders must include model numbers, color, quantity, accessories and any special instructions. Purchaser assumes responsibility to supply correct information when placing order. Prices and specifications subject to change. Refer to www.ofminc.com for the most up-to-date information.

SHIPPING & HANDLING:

All terms are FOB from point of origin. OFM will initiate all prepaid freight claims. Any visual shortages or damages MUST be noted in writing at TIME OF DELIVERY on bill of lading. LTL carriers will not accept verbal information that differs from signed bill of lading.
Damages must be reported and filed by OFM within 5 days after the receipt of goods and shortages must be noted immediately upon receipt. If reported after the fifth day it will be up to the sole discretion of OFM to repair or replace product at no charge. We cannot accept damage reports after this time. All orders shipped to APO/FPO locations will incur an additional $15 per carton handling charge.

CUSTOMER PICK UP:

All orders need to be inspected and signed for at the time of pick up. No claims regarding damages or shortages will be accepted.

PAYMENT TERMS:

OFM relies on D&B for credit worthiness of new and established accounts for open credit terms. Terms are net 30 from date of invoice. If open account is not established, credit card or check will be accepted in advance.

RETURNS POLICY:

Returns are accepted at our North Carolina warehouse ONLY. All returns must be shipped prepaid and be made within 30 days of purchase. Collect shipments will be refused and returned. To return a product, a Return Authorization form can be download from our company website, www.ofminc.com/forms.asp or you can call 800-520-7471 and request a Return Authorization Form from your customer service representative. The Return Authorization form can be sent to your customer service representative or you can email the form to returns@ofminc.com. You will also be issued a Return Authorization number. This number will ALWAYS have the prefix "RA". Merchandise returned without the RA number will be refused by OFM. Return Authorization numbers are only valid for 30 days. OFM reserves the right to inspect all returns and determine applicable restocking and/or reboxing fees. A missing item or damaged product fee may be assessed if a returned product is missing the original box, packaging materials, contents, accessories, assembly instructions or is not in "like new" condition.
A minimum fee of 25% will apply for restocking only. All warranty parts are available for replacement at NO charge and are shipped via ground service. If upgraded service is required, the customer will be billed the difference in freight. Our freight carriers, including UPS, reserve the right to institute fuel surcharges on some or all shipments, without prior notice.

To the extent allowed by law, OFM makes no other warranty, either expressed or implied, including any warranty of merchantability or fitness for a particular purpose. OFM will not be liable for any consequential or incidental damages.