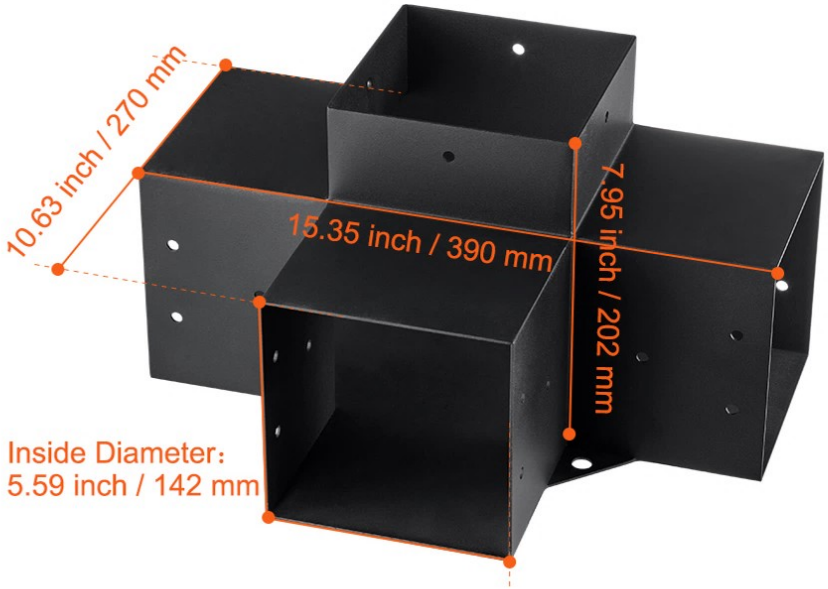

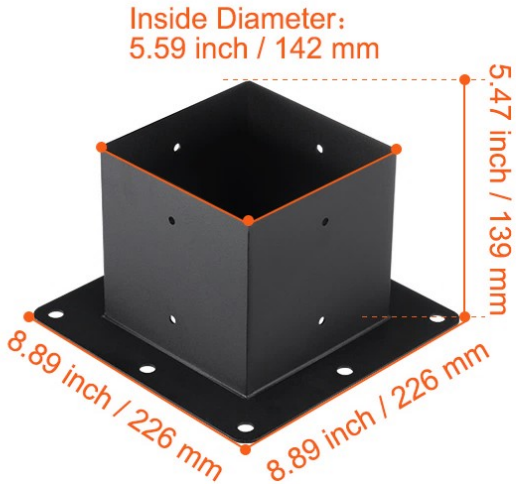

x2

x2

x16

x64

x1