ITEM # 7631738/7631741
MODEL # RIO52MW3LR/RIO52MBK3LR

LAGOON POINT CEILING FAN

Español p. 21

ATTACH YOUR RECEIPT HERE

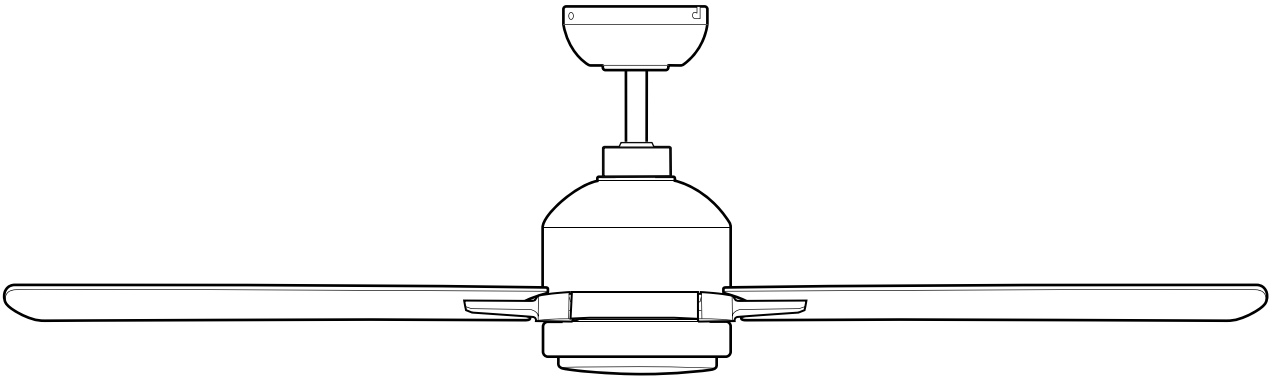

Intertek
4007498

Purchase Date _____

Questions, problems, missing parts? Before returning to your retailer, call our customer service department at **800-527-1292**, 8:30 a.m. - 5 p.m., CST, Monday - Friday.

TABLE OF CONTENTS

Safety Information 2

Package Contents 5

Hardware Contents 6

Preparation 6

Initial Installation 6

Downrod-Style Fan Mounting 9

Closemount-Style Fan Mounting 11

Wiring 12

Final Installation 13

Operating Instructions 16

Care and maintenance 18

Troubleshooting 19

Limited Lifetime Warranty 20

Replacement Parts List 20

SAFETY INFORMATION

CAUTION: Changes or modifications not approved by the party responsible for compliance could void the user's authority to operate the equipment.

***NOTE**: This equipment has been tested and found to comply with the limits for a Class B digital device, pursuant to Part 15 of the FCC Rules. These limits are designed to provide reasonable protection against harmful interference in a residential installation. This equipment generates, uses and can radiate radio frequency energy and, if not installed and used in accordance with the instructions, may cause harmful interference to radio communications. However, there is no guarantee that interference will not occur in a particular installation. If this equipment does cause harmful interference to radio or television reception, which can be determined by turning the equipment off and on, the user is encouraged to try to correct the interference by one or more of the following measures:

* Reorient or relocate the receiving antenna.
* Increase the separation between the equipment and receiver.
* Connect the equipment into an outlet on a circuit different from that to which the receiver is connected.

Consult the dealer or an experienced radio/TV technician for help.

The device complies with Part 15 of the FCC Rules. Operation is subject to the following two conditions: (1) this device may not cause harmful interference, (2) this device must accept any interference received, including interference that may cause undesired operation..

Distributed by: Litex Industries Inc., P.O. Box 535639, Grand Prairie, TX, 75053; 800-527-1292

NOTE: Dimmable to 10%.

SAFETY INFORMATION

READ AND SAVE THESE INSTRUCTIONS

Please read and understand this entire manual before attempting to assemble, install or operate the product. Review the accompanying assembly diagrams.

- Do not discard fan carton inserts. Should this fan need to be returned to the factory for repairs, it must be shipped in its original packaging to ensure proper protection against damage that might exceed the initial cause for return.
- Make sure all electrical connections comply with local codes, ordinances, the National Electrical Code and ANSI/NFPA 70-1999. Hire a qualified electrician or consult a do-it-yourself wiring handbook if you are unfamiliar with installing electrical wiring.
- Make sure the installation site you choose allows a minimum clearance of 7 ft. from the blades to the floor and at least 30 in. from the end of the blades to any obstruction.
- After you install the fan, make sure all connections are secure to prevent the fan from falling.
- The net weight of this fan including the light kit is: 11.24 lbs.

⚠ DANGER

When using an existing outlet box, make sure the outlet box is securely attached to the building structure and can support the full weight of the fan. Failure to do this can result in serious injury or death. The stability of the outlet box is essential in minimizing wobble and noise in the fan after installation is complete.

To reduce the risk of serious bodily injury, DO NOT use power tools to assemble any part of the fan, including the blades.

Before installation, be sure to shut off electricity at main switch or circuit breaker in order to avoid electrical shock.

⚠ WARNING

To reduce the risk of fire, electrical shock or personal injury, mount fan to outlet box marked "ACCEPTABLE FOR FAN SUPPORT OF 35 LBS. (15.9 KG) OR LESS" and use mounting screws provided with the outlet box. Most outlet boxes commonly used for the support of lighting fixtures are not acceptable for fan support and may need to be replaced. Consult a qualified electrician if in doubt.

When mounting fan to a ceiling outlet box, use a METAL octagonal outlet box; do NOT use a plastic outlet box. Secure the outlet box directly to the building structure. The outlet box and its support must be able to support the moving weight of the fan (at least 35 lbs.).

To reduce the risk of fire, electrical shock or personal injury, lever wire connectors provided with this fan are designed to accept only one 12-gauge house wire and one lead wire from the fan. If your house wire is larger than 12-gauge or there is more than one house wire to connect to the corresponding fan lead wires, consult an electrician for the proper size lever wire connectors to use.

SAFETY INFORMATION

⚠ WARNING

To avoid personal injury, the use of gloves may be necessary while handling fan parts with sharp edges.

To reduce the risk of fire or electrical shock, do not use the fan with any solid state speed control device or control fan speed with a full range dimmer switch.

To reduce the risk of fire, electrical shock or personal injury, do not bend the blades when installing or balancing them, or cleaning the fan. Do not insert objects between the rotating fan blades.

To reduce the risk of personal injury, use ONLY parts provided with this fan. The use of parts OTHER than those provided with this fan will void the warranty.

⚠ CAUTION

Be sure outlet box is properly grounded and that a ground wire (green or bare) is present.

Once installation is complete, carefully check all screws, bolts and nuts on fan motor assembly to ensure that they are secured.

Do NOT tamper with or attempt to repair LED component. The light source is designed for this specific application and should not be serviced by untrained personnel. If any servicing is required, call our customer service department.

The DC Motor will not operate until blades are installed.

PACKAGE CONTENTS

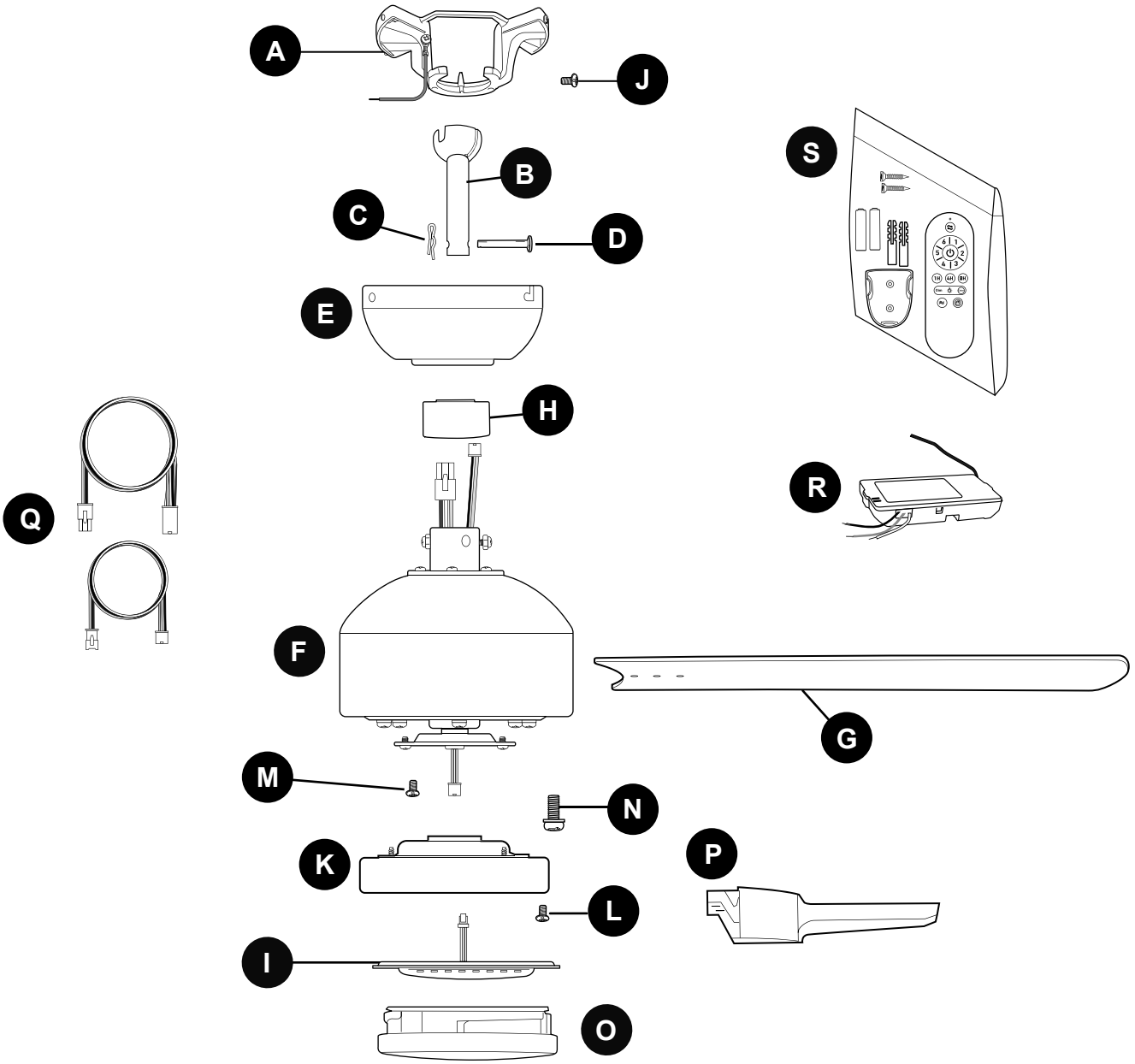

PART	DESCRIPTION	QUANTITY
A	Mounting Bracket	1
B	Downrod	1
C	Clip (preassembled)	1
D	Pin (preassembled)	1
E	Canopy	1
F	Motor Housing	1
G	Blade	3
H	Yoke Cover	1
I	LED Light Kit	1
J	Canopy Mounting Screw (preassembled)	4

PART	DESCRIPTION	QUANTITY
K	Fitter Plate	1
L	Fitter Plate Screw (preassembled)	3
M	Motor Plate Screw (preassembled)	3
N	Motor Screw/Lock Washer (preassembled)	6 + 1 extra
O	Shade	1
P	Blade Arm	3
Q	Additional Wiring	2
R	Remote Control Receiver	1
S	Remote Pack	1

⚠ **IMPORTANT REMINDER:** You must use the parts provided with this fan for proper installation and safety.

HARDWARE CONTENTS (shown actual size)

AA	BB	CC
	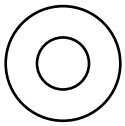	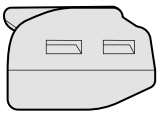
Blade Screw	Fiber Blade Washer	Lever Wire Connector
Qty. 9 + 1 extra	Qty. 9 + 1 extra	Qty. 3

PREPARATION

Before beginning assembly of product, make sure all parts are present. Place motor on carpet or on foam to avoid damage to finish. Compare parts with package contents list and hardware contents list. If any part is missing or damaged, do not attempt to assemble the product.

Estimated Assembly Time: 120 minutes

Tools Required for Assembly (not included): Electrical Tape, Phillips Screwdriver, Pliers, Safety Glasses, Stepladder and Wire Strippers.

Helpful Tools (not included): AC Tester Light, Tape Measure, Do-It-Yourself Wiring Handbook and Wire Cutters.

INITIAL INSTALLATION

1. Turn off circuit breakers and wall switch to the fan supply line leads.

   ⚠ **DANGER**: Failure to disconnect power supply prior to installation may result in serious injury or death.

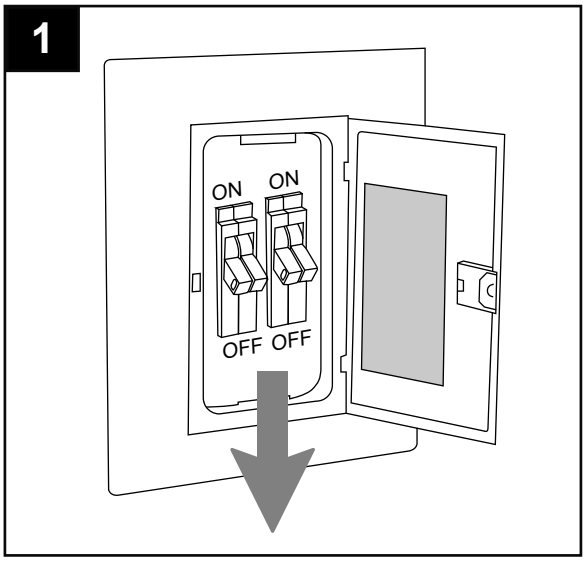

INITIAL INSTALLATION

2. If applicable, remove existing fan and fan parts, including the mounting bracket, from outlet box and disconnect all electrical wiring.

   ⚠ **WARNING:** To reduce the risk of personal injury, use *ONLY* parts provided with your new fan. The use of parts *OTHER* than those provided with this fan will void the warranty.

   Set aside screws, spring washers and flat washers (provided with the outlet box) for fan installation.

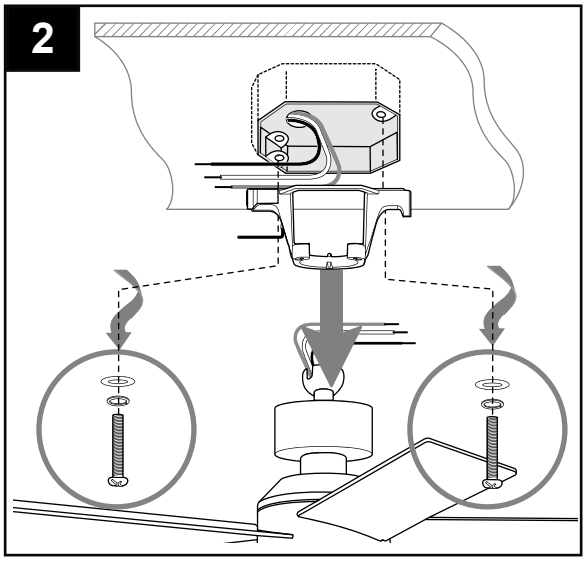

3. Determine mounting method to use.
   A. Downrod mount (standard or angled ceiling).
   B. Closemount (standard ceiling only).

   IMPORTANT: If using the angle mount, check to make sure the ceiling angle is not steeper than 16°.

   ***Helpful Hint:** Downrod-style mounting is best suited for ceilings 8 ft. or higher. For taller ceilings you may want to use a longer downrod (not included). Angle-style mounting is best suited for angled or vaulted ceilings. A longer downrod is sometimes necessary to ensure proper blade clearance. Closemount mounting is more suitable for ceilings lower than 8 ft. high.

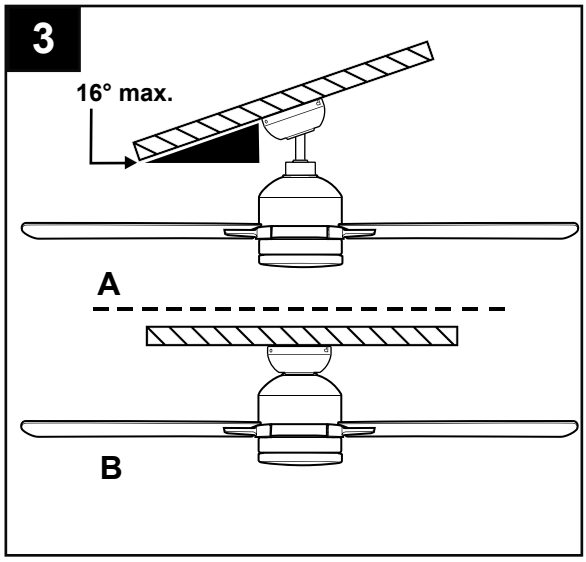

4. Check to make sure blades (G) will be at least 30 in. from any obstruction and at least 7 ft. above the floor.

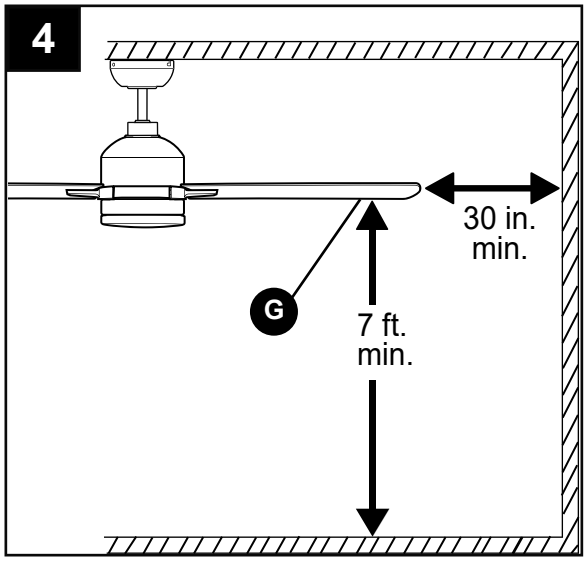

INITIAL INSTALLATION

5. ***If attaching mounting bracket (A) to an existing outlet box (not included) with pre-installed screws***, spring washers and flat washers, slide mounting bracket (A) over the screws. *Then proceed to the following paragraph.* ***If attaching mounting bracket (A) to outlet box where screws/washers were removed***, secure mounting bracket (A) to outlet box using the screws, spring washers and flat washers previously removed in (Step 2, page 7).

   ⚠ **WARNING:** It is very important you use the proper hardware when installing the mounting bracket as this will support the fan.

5a. ⚠ **DANGER:** To reduce the risk of serious injury or death, the outlet box screws MUST be installed somewhere within the long slots of the mounting bracket and then TIGHTENED DOWN COMPLETELY. [Refer to Fig. 5a.]

5b. ⚠ **DANGER:** To reduce the risk of fire, electrical shock, serious personal injury or damage to the fan, make sure outlet box screws DO NOT get installed on or near the wall that separates the keyhole and the long, narrow slot on each side of the mounting bracket. [Refer to Fig. 5b.]

   ⚠ **WARNING:** If using the angle mount, make sure open end of mounting bracket (A) is installed facing the higher point of the ceiling, and ensure the ceiling angle is not steeper than 16°.

   For **DOWNROD-STYLE FAN MOUNTING**, proceed to Step 1 on the following page.

   For **CLOSEMOUNT-STYLE FAN MOUNTING**, skip to page 11.

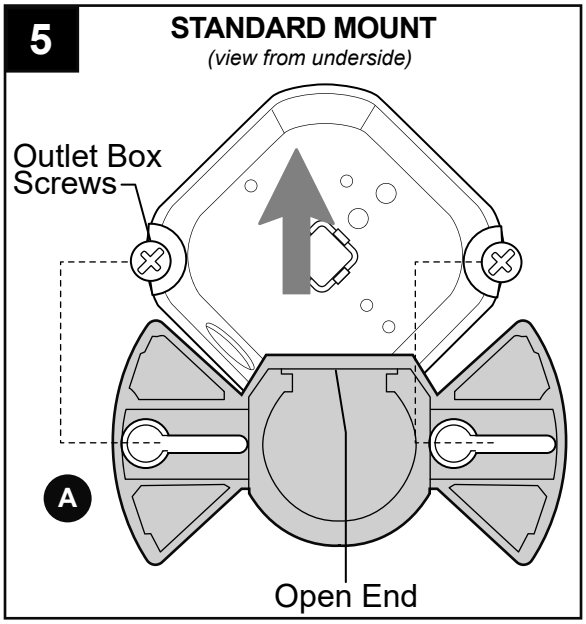

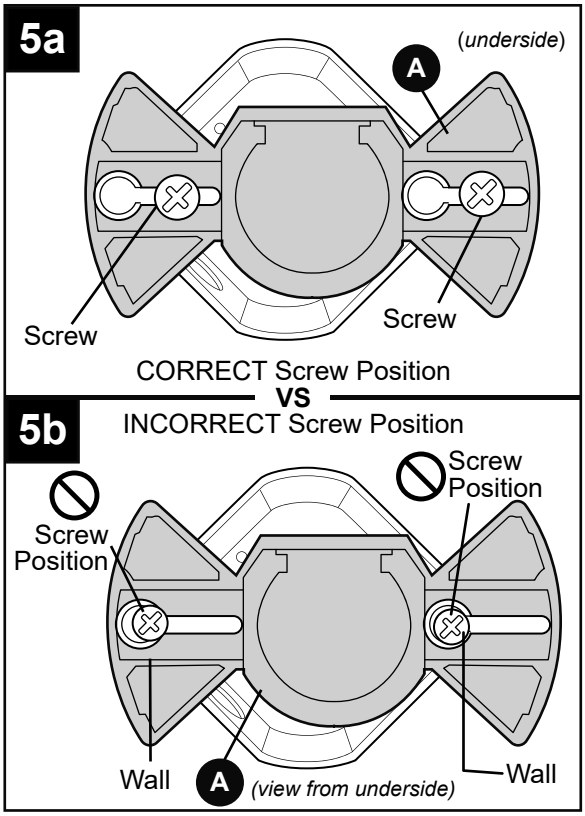

DOWNROD-STYLE FAN MOUNTING

1a. Remove pin (D) and clip (C) from downrod (B).

1b. Partially loosen preassembled set screws and nut in yoke at top of motor housing (F).

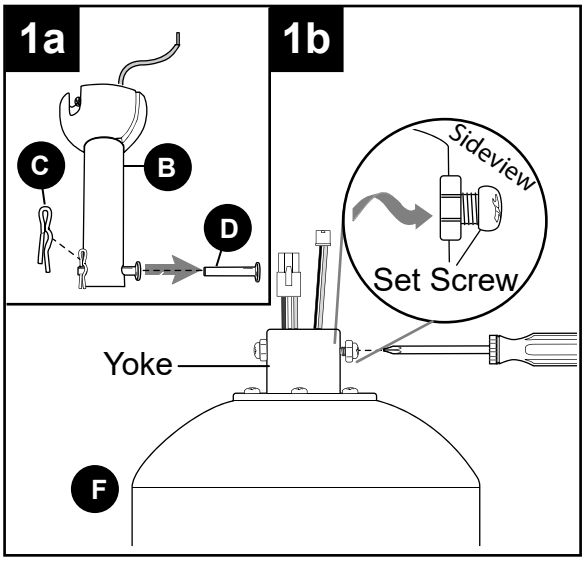

2a. Remove stop pin from downrod (B) by loosening set screw on hanging ball. Lower hanging ball and remove stop pin.

2b. Insert downrod (B) through canopy (E) and yoke cover (H).

Thread wires from motor housing (F) through downrod (B). Raise hanging ball, replace stop pin and tighten set screw.

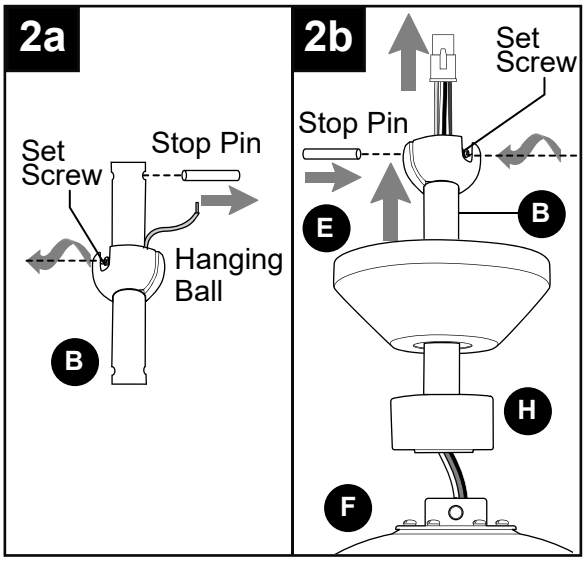

3. Slip downrod (B) into motor housing yoke, align holes and re-install pin (D) and clip (C). Tighten set screws in motor housing yoke and then tighten preassembled nut on one of the set screws. Then, slide yoke cover (H) down until it rests on top of motor housing (F).

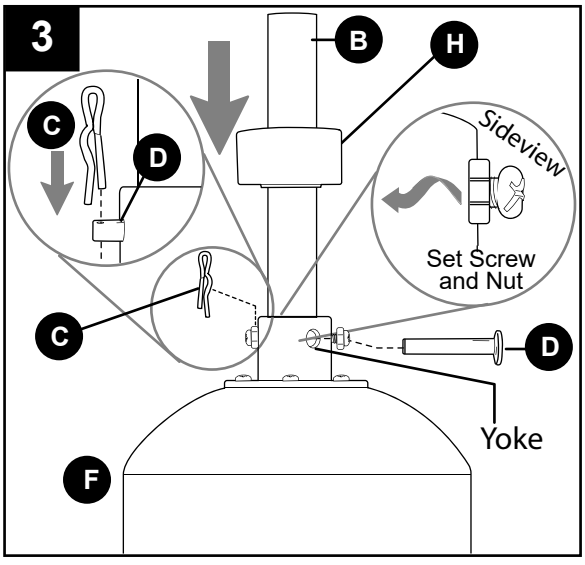

DOWNROD-STYLE FAN MOUNTING

4. Depending on the length of downrod you use, you may need to use the additional lead wiring (Q).

   Connect male plugs from motor housing (F) to the ends of additional lead wiring (Q) with female plugs, matching up the colors on the plugs for correct fit. Make sure plugs connect tightly.

   NOTE: If you do ***not*** use additional lead wiring (N), ***Step 4 is not necessary and you may proceed to Step 5 instead***.

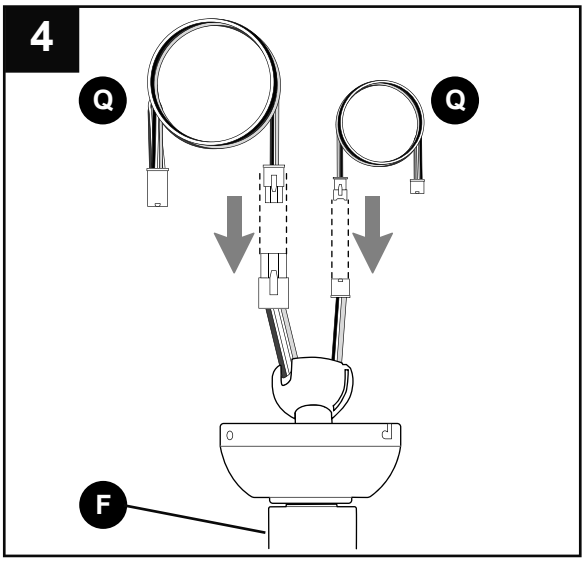

5. Install hanging ball of downrod (B) into opening of mounting bracket (A). Align one of the slots in hanging ball with the tab in mounting bracket (A).

   ⚠ **DANGER**: Failure to align one of the slots in hanging ball with the tab in mounting bracket (A) may result in serious injury or death.

   Continue to **WIRING** on page 12.

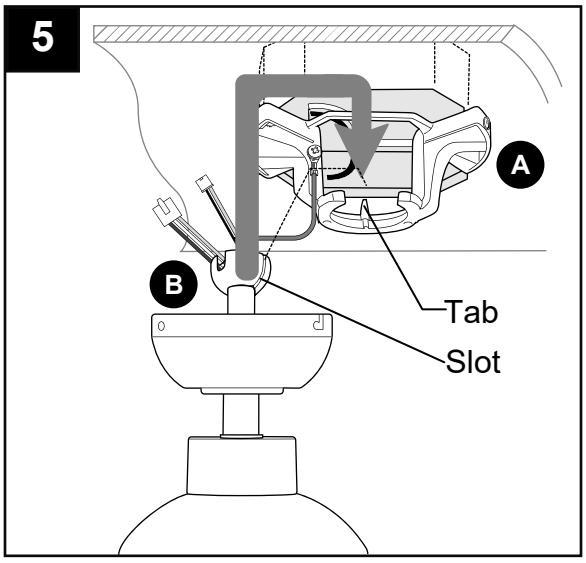

CLOSEMOUNT-STYLE FAN MOUNTING

1. Remove preassembled canopy cover from bottom of canopy (E). **NOTE:** To remove canopy cover from canopy (E), twist canopy cover until the two small protrusions on the inner lip of the canopy cover align with the two notches on the bottom of the canopy (E). Pull on canopy cover to remove.

   NOTE: The downrod (B), yoke cover (H), and canopy cover are not used in this type of installation.

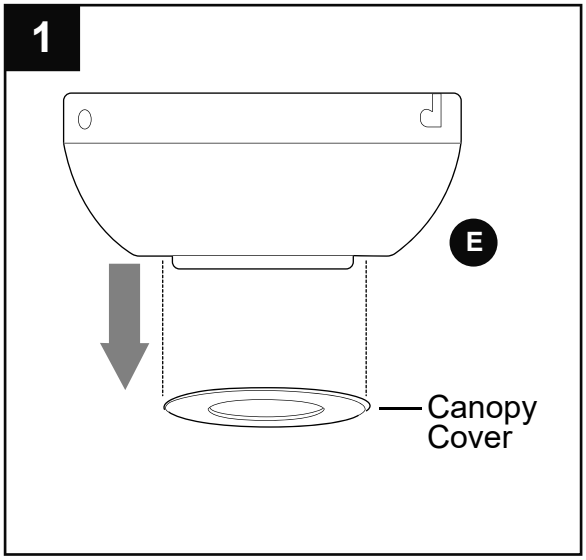

2. Remove every other preassembled screw and lock washer from top of motor housing (F).

   Pull wires up through hole in the middle of the canopy (E) and attach canopy (E) to motor housing (F) using the three previously removed screws and lock washers.

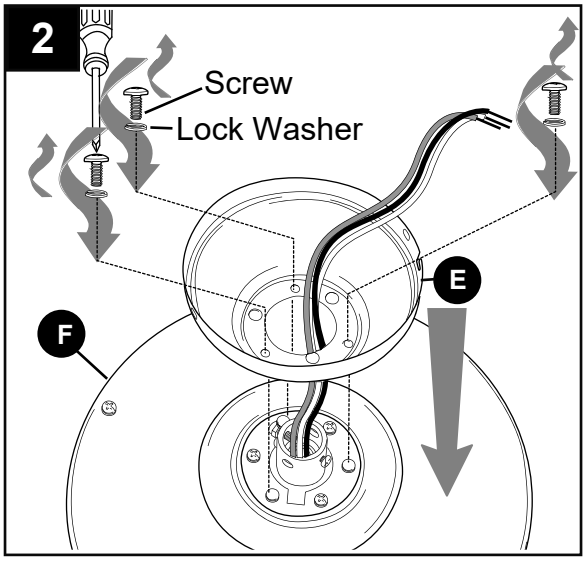

3. Temporarily hang fan on the tab on the mounting bracket (A) using one of the non-slotted holes in the canopy (E).

   Continue to **WIRING** on the following page.

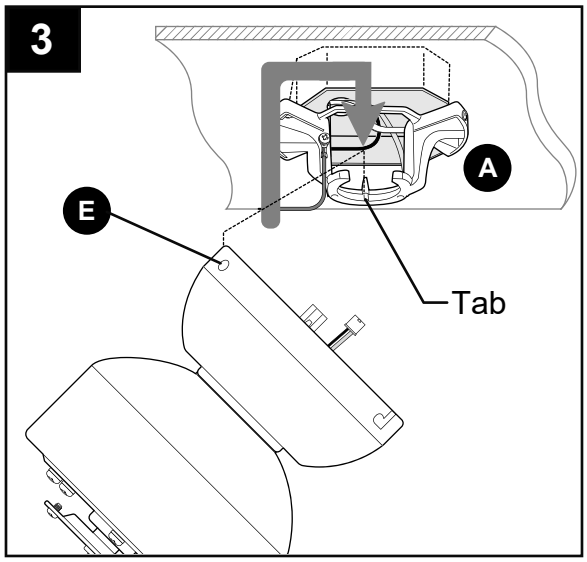

WIRING

WARNING: To reduce the risk of fire, electrical shock or personal injury, lever wire connectors provided with this fan are designed to accept only one 12-gauge house wire and one lead wire from the fan. If your house wire is larger than 12-gauge or there is more than one house wire to connect to the corresponding fan lead wires, consult an electrician for the proper size lever wire connectors to use.

CAUTION: Be sure outlet box is properly grounded and that a ground (GREEN or BARE) wire is present.

WARNING: If house wires are different colors than referred to in the following steps, stop immediately. A professional electrician is recommended to determine wiring.

WARNING: Using a full range dimmer switch (not included) to control fan speed will cause a loud humming noise from fan. To reduce the risk of fire or electrical shock, do NOT use a full range dimmer switch to control fan speed.

1. **IMPORTANT:** Make the necessary wiring connections for remote control operation as detailed in Step 2 below. Each wire connection is made by firmly raising the levers on each lever wire connector (CC), as shown. Then, ONE wire is inserted into each opening.

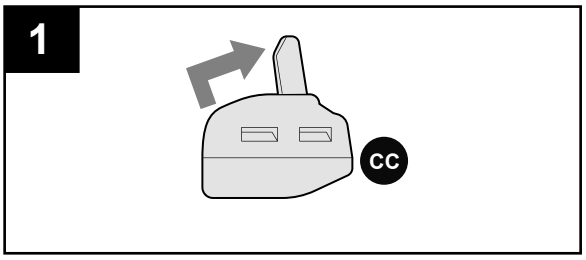

2. Insert each GROUND (GREEN) wire from fan (on downrod (B), if applicable, and mounting bracket (A)), remote control receiver (R) and the BARE/GREEN supply wire from ceiling into openings in lever wire connector (CC) with five levers.

   Insert BLACK wire (labeled AC IN L) from remote control receiver (R) and BLACK supply wire from ceiling into openings in lever wire connector (CC).

   Insert WHITE wire (labeled AC IN N) from remote control receiver (R) and WHITE supply wire from ceiling into openings in lever wire connector (CC).

   Connect male plugs from motor housing (F) into corresponding female plugs on remote control receiver (R). Make sure plugs connect tightly.

   NOTE: BLACK wire is hot power for fan. WHITE wire is common for fan and light kit. GREEN or BARE wire is ground.

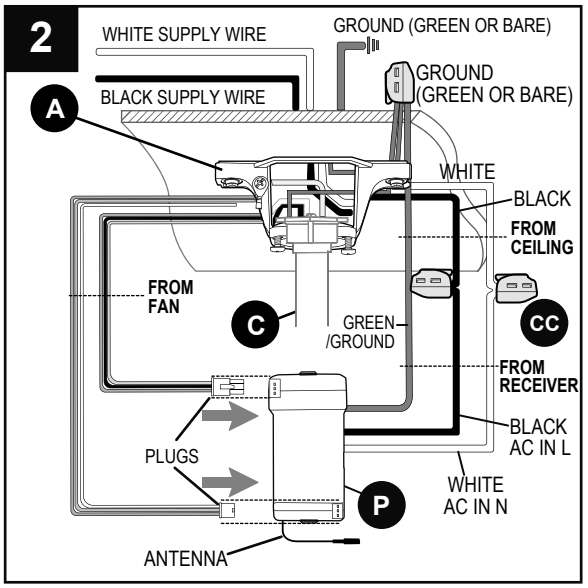

WIRING

3. Wrap electrical tape around each individual lever wire connector (CC) down to the wire.

   ⚠ **WARNING:** Make sure no bare wire or wire strands are visible after making connections. Place GREEN and WHITE connections on opposite side of box from the BLACK and BLUE (if applicable) connections.

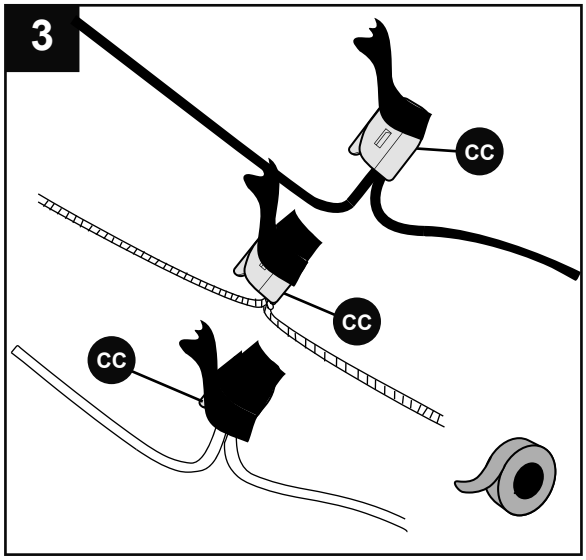

Hardware Used

CC Lever Wire Connector 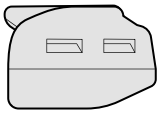 x 3

4. Gently slide remote control receiver (R) flat-side up into mounting bracket (A). Turn spliced/taped wires upward and gently push wires and wire connectors into outlet box. Let antenna from remote control receiver (R) hang to the side.

   NOTE: The remote control included with this fan meets the following requirements:
   - **a.** Not for use with solid state fans.
   - **b.** Electrical rating: 120V / 60 Hz;
     motor amps:1.25 MAX.
     motor wattage: 65W MAX.

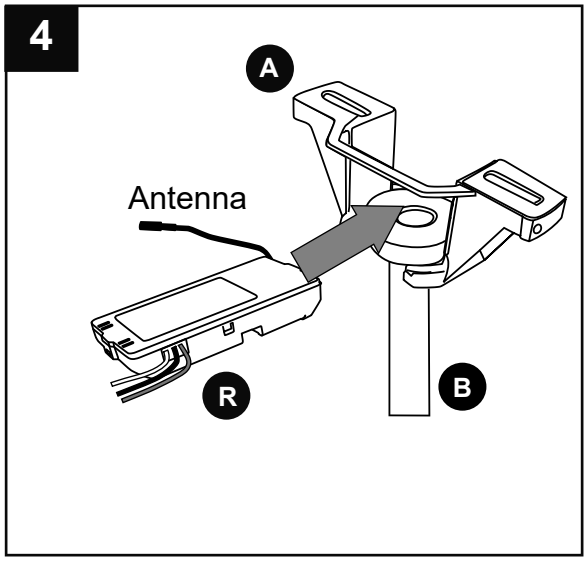

FINAL INSTALLATION

1. Temporarily lift canopy (E) to mounting bracket (A) to determine which two canopy mounting screws (J) in mounting bracket (A) align with slotted holes in canopy (E) and partially loosen these two canopy mounting screws (J). Remove the other two canopy mounting screws (J). Now, lift canopy (E) to mounting bracket (A) again, aligning slotted holes in canopy (E) with loosened canopy mounting screws (J) in mounting bracket (A). Twist canopy (E) clockwise to lock. Re-insert the two canopy mounting screws (J) that were just removed and tighten all canopy mounting screws (J) securely.

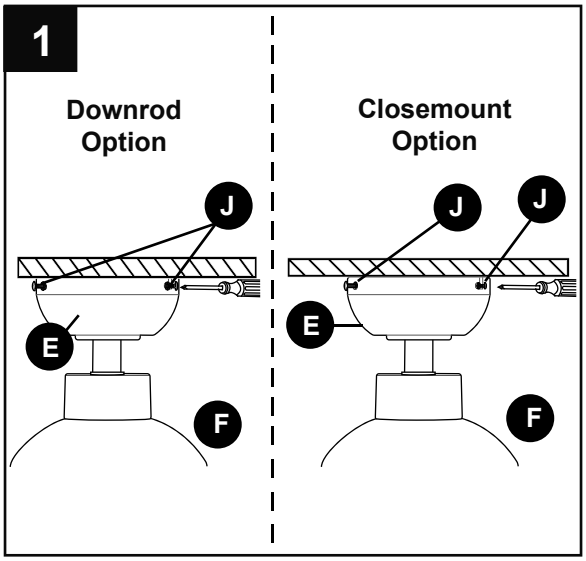

FINAL INSTALLATION

2. ⚠ **DANGER:** To reduce the risk of serious bodily injury, DO NOT use power tools to assemble the blades (G). If screws are overtightened, blades (G) may crack and break.

   Partially insert blade screws (AA) along with fiber washers (BB) into holes in blade (G) to attach blade arm (P) to blade (G). Then, tighten each blade screw (AA).

   Repeat for remaining blades (G) and blade arms (P).

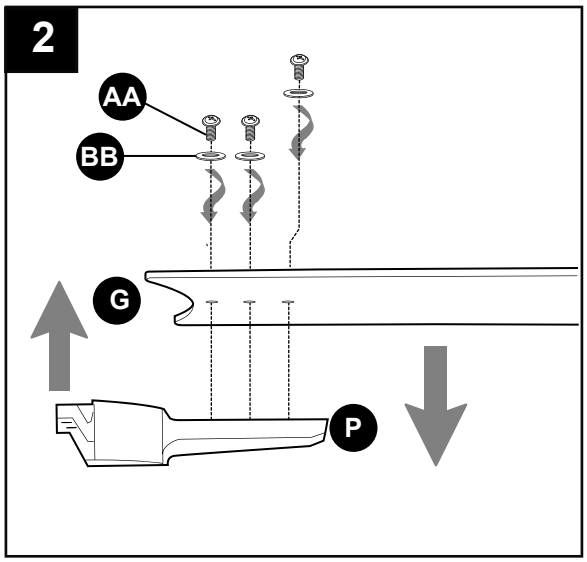

Hardware Used

AA	Blade Screw		x 9
BB	Fiber Washer	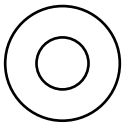	x 9

3. Remove motor screws/lock washers (N) from underside of motor housing (F). Attach blade arms (P) to the bottom of motor housing (F) with motor screws/lock washers (N). Tighten motor screws/lock washers (N) securely. **NOTE:** Make sure to completely secure each blade arm (P) before proceeding to the next.

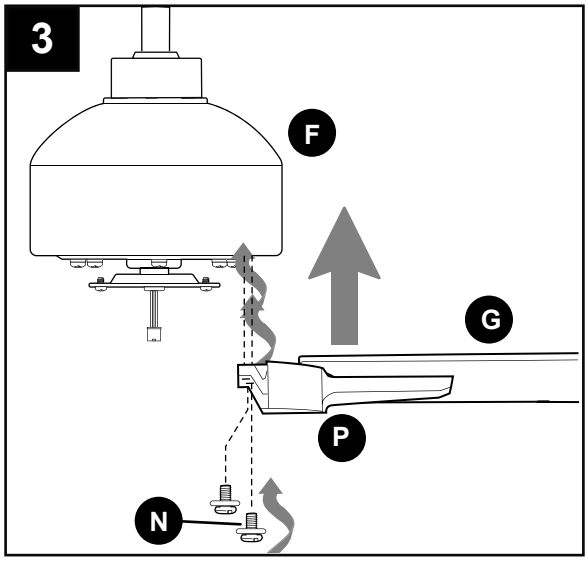

4. Remove one motor plate screw (M) from motor plate on underside of motor housing (F) and partially loosen the other two motor plate screws (M). Align slotted holes in fitter plate (K) with loosened motor plate screws (M), allowing male plug from motor housing (F) to come through hole in fitter plate (K). Twist fitter plate (K) to lock. Re-insert the motor plate screw (M) that was removed and securely tighten all three motor plate screws (M).

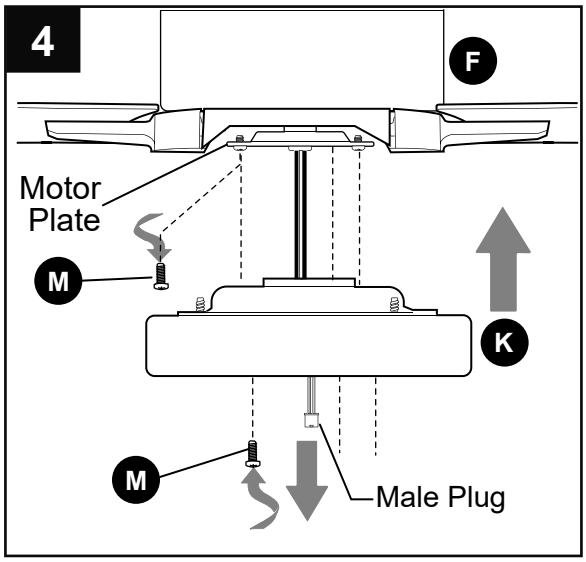

FINAL INSTALLATION

5. Remove one fitter plate screw (L) from underside of fitter plate (K) and partially loosen the other two fitter plate screws (L).

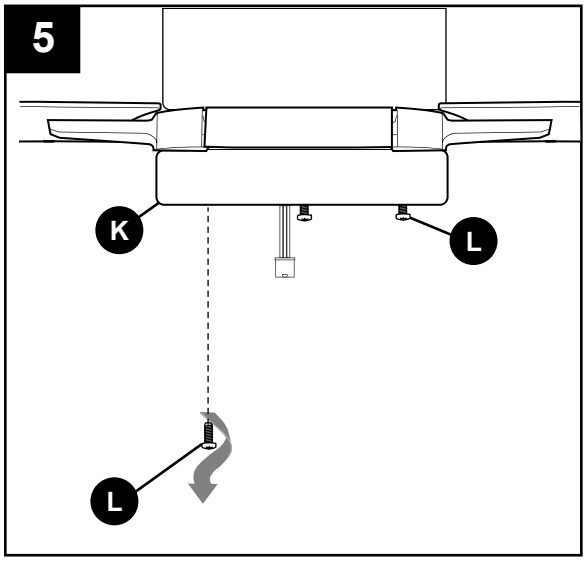

6. Connect male plug from motor housing (F) to female plug on LED light kit (I), matching up the colors on the plugs for correct fit. Make sure plugs connect tightly.

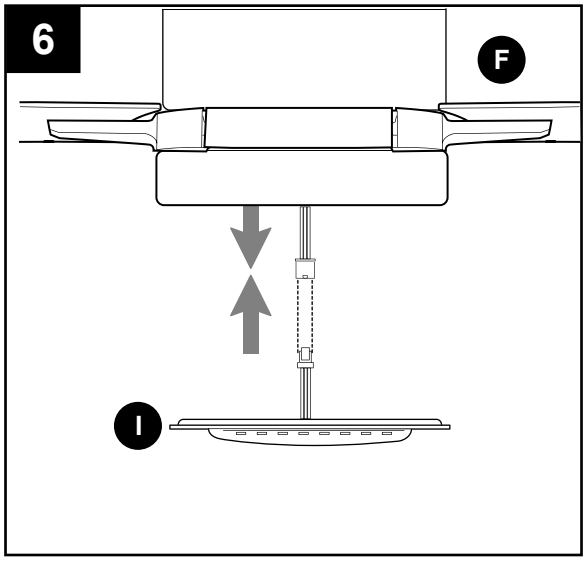

7. Carefully arrange wiring within the fitter plate (K) to ensure wires do not get pinched when attaching the LED light kit (I).

   Align slotted holes in LED light kit (I) with loosened fitter plate screws (L) on fitter plate (K). Twist LED light kit (I) to lock in place. Re-insert the previously removed fitter plate screw (L) and securely tighten all fitter plate screws (L).

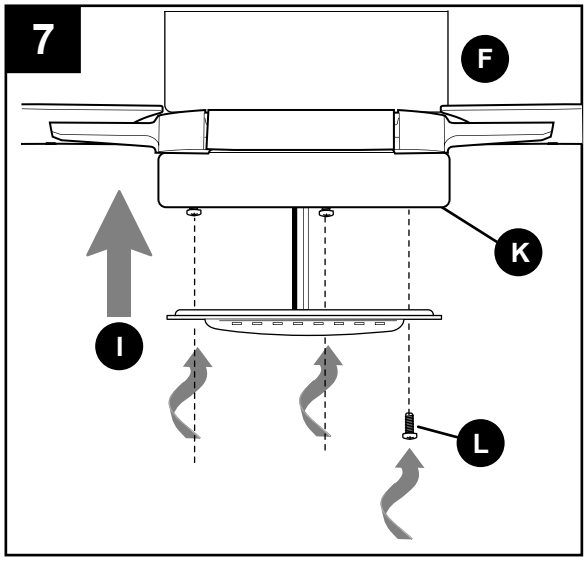

FINAL INSTALLATION

8. Align slots on shade (O) with protrusions on underside of fitter plate (K). Turn shade (O) *clockwise* until it no longer turns.

   NOTE: Pull down gently on the shade (O) to make sure it is completely secured.

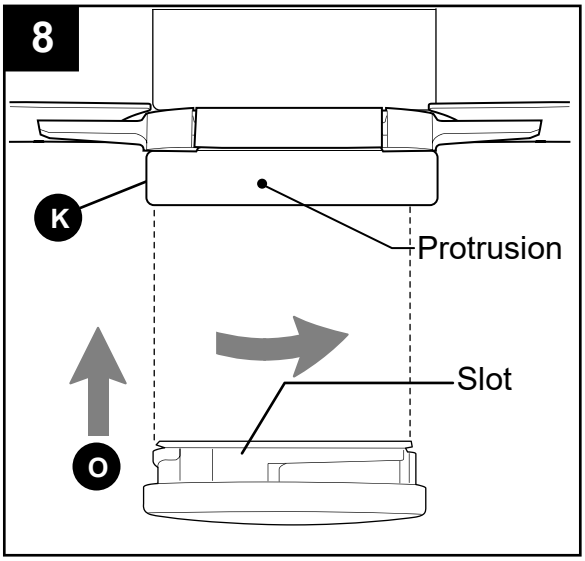

OPERATING INSTRUCTIONS

⚠ **CAUTION:** The remote control transmitter can be programmed to multiple receivers or fans. If this is not desired, turn wall switch off to any other programmable receiver or fan.

FCC Compliance Notice for Remote Control and LED Light Kit

⚠ **CAUTION:** Changes or modifications not approved by the party responsible for compliance could void the user's authority to operate the equipment.

This device complies with Part 15 of the FCC Rules. Operation is subject to the following two conditions: (1) this device may not cause harmful interference, (2) this device must accept any interference received, including interference that may cause undesired operation.

NOTE: This equipment has been tested and found to comply with the limits for a Class B digital device, pursuant to Part 15 of the FCC Rules. These limits are designed to provide reasonable protection against harmful interference in a residential installation. This equipment generates, uses and can radiate radio frequency energy and, if not installed and used in accordance with the instructions, may cause harmful interference to radio communications. However, there is no guarantee that interference will not occur in a particular installation. If this equipment does cause harmful interference to radio or television reception, which can be determined by turning the equipment off and on, the user is encouraged to try to correct the interference by one or more of the following measures:

* Reorient or relocate the receiving antenna.
* Increase the separation between the equipment and receiver.
* Connect the equipment into an outlet on a circuit different from that to which the receiver is connected.

Consult the dealer or an experienced radio/TV technician for help.

Distributed by: Litex Industries Inc., P.O. Box 535639, Grand Prairie, TX, 75053; 800-527-1292

OPERATING INSTRUCTIONS

1. Locate remote control transmitter in remote pack (S). Remove battery cover from the back side of the remote control transmitter. Install two AAA batteries from remote pack (S) into battery compartment. Observe diagram inside battery compartment to install batteries correctly.

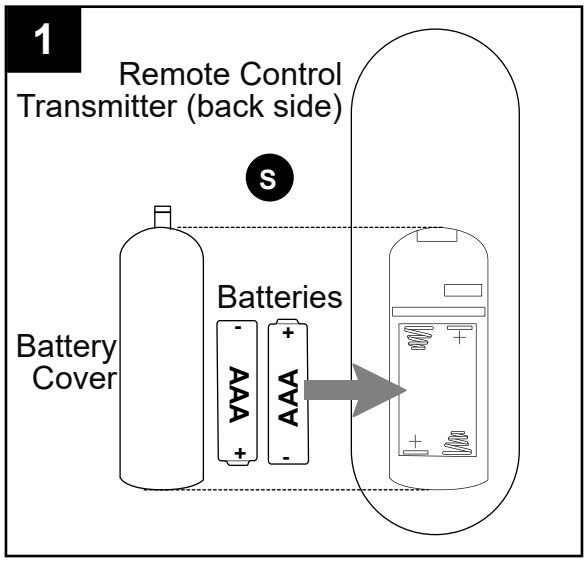

⚠WARNING: Batteries are to be inserted with the correct polarity.

NOTE: When replacing batteries, do not mix different types of batteries such as alkaline, carbon-zinc or rechargeable batteries. Do not mix old and new batteries.

⚠WARNING: ***Choking/Ingestion Hazard*** - Small parts.Keep batteries away from children.

NOTE: Batteries are NOT rechargeable. Remove batteries with low or no charge and dispose of properly.

⚠ CAUTION: "DO NOT DISPOSE OF BATTERIES IN FIRE, BATTERIES MAY EXPLODE OR LEAK." - When disposing of household alkaline batteries, it is best to check with your local and state recycling or household hazardous waste coordinators concerning the specifics of the program in your area. You may also locate a recycling center by calling 1-800-8-BATTERY or 1-877-2-RECYCLE or visit www.epa.gov/epawaste/index.htm or www.earth911.org for more information.

2. Replace battery cover on remote control transmitter.

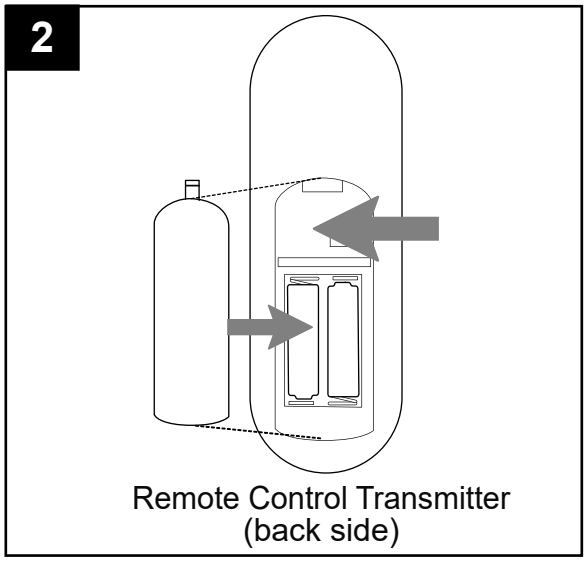

Restore electrical power.
IMPORTANT: To prevent damage to remote control transmitter, remove the batteries if not used for long periods. Store the remote control transmitter away from excess heat or humidity.

NOTE: If fan and/or remote control fail(s) to operate or you have purchased a new remote control transmitter, make sure to turn the power off first. Restore electrical power. Within 30 seconds of restoring electrical power, press and hold the OFF button (⏻) on the remote control transmitter (refer to Step 3 on the following page) for 5 seconds or until fan beeps. Use the remote control transmitter to test the light and fan functions to confirm the learning process is complete.

OPERATING INSTRUCTIONS

3. Operation buttons on the front panel of the remote control transmitter:
   - 1 - Reverse function ─ fan must be set on low before reversing blade direction
   - 2 - Fan speeds: **1** (lowest) to **6** (highest) and to turn fan ON
   - 3 - **OFF** power button for fan and learning function
   - 4 - Timer mode: fan may be set to run for
     – 1 hour / 4 hours / 8 hours
   - 5 - Dimmer mode: press and hold to dim light
   - 6 - **ON** / **OFF**, power button for light
   - 7 - Color mode: change/select light color
     – soft white
     – warm white
     – cool white
     – daylight
     – cool daylight
   - 8 - Breeze mode: fan automatically cycles between all 6 different speeds
   - 9 - Vacation mode: light kit switches on for 5 minutes every 2 hours

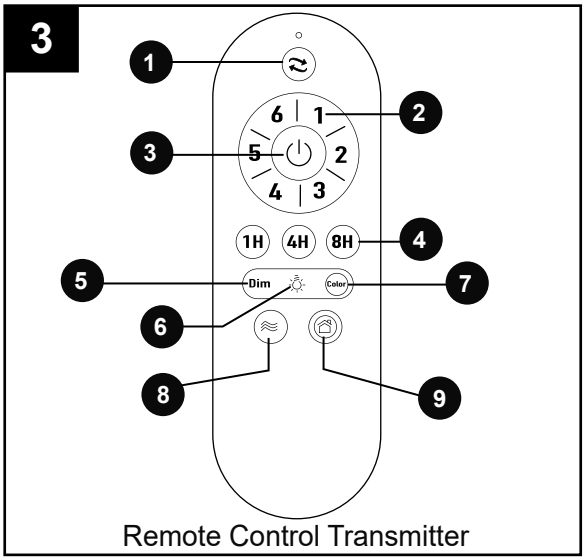

Remote Control Transmitter

CARE AND MAINTENANCE

At least twice each year, lower canopy to check downrod assembly, if applicable, and then tighten all screws on fan. Clean motor housing with only a soft brush or lint-free cloth to avoid scratching the finish. Clean blades with a lint-free cloth. You may occasionally apply a light coat of furniture polish to wood blades for added protection.

IMPORTANT: Shut off main power supply before beginning any maintenance. Do not use water or a damp cloth to clean the ceiling fan.

Total wattage for this fan is 20 watts; do not attempt to replace the LEDs.

TROUBLESHOOTING

⚠ **WARNING:** Before beginning work, shut off the power supply to avoid electrical shock.

PROBLEM	POSSIBLE CAUSE	CORRECTIVE ACTION
Fan does not move.	1. Power is off or fuse is blown. 2. Faulty wire connection. 3. Blades are not installed.	1. Turn power on or check fuse. 2. Turn power off. Loosen canopy and check all connections. 3. Install all blades (see page 14).
Noisy operation.	1. Blades are loose. 2. Cracked blade. 3. Fan is new.	1. Tighten all blade screws. 2. Replace blade. 3. Allow fan a “break in” period of a few days, especially when running the fan at Medium and High speeds.
Excessive wobbling.	1. Blades are loose. 2. Blade arms incorrectly attached. 3. Unbalanced blades. 4. Fan not securely mounted. 5. Fan too close to vaulted ceiling. 6. Set screw(s) on motor housing yoke is (are) not tightened properly. 7. Set screw on hanging ball is not tightened properly.	1. Tighten all blade screws. 2. Re-install blade arms. 3. Switch one blade with a blade from the opposite side. 4. Turn power off. Carefully loosen canopy and verify that mounting bracket is secure. 5. Use a longer downrod or move fan to another location. 6. Tighten yoke set screw(s) securely. 7. Carefully loosen and lower canopy and verify that set screw on hanging ball is tightened securely.
Fan operates but light fails.	1. Wires in canopy not wired properly. 2. Wall switch to fan is off. 3. Wires from LED light kit not wired correctly.	1. Check wires in canopy and, if necessary, re-wire according to instructions on page 12. 2. Make sure wall switch to fan is on. 3. Check wires from LED light kit and, if necessary, re-wire according to instructions on page 15.
Remote control fails to operate.	1. Remote control transmitter not synced with fan. 2. Batteries not installed correctly. 3. Battery/Batteries no longer working.	1. Refer to instructions in Step 2 on page17. 2. Check that batteries have been installed with correct polarity. 3. Replace both batteries according to instructions on page 17.

NOTE: A small amount of "wobble" is normal and should not be considered a defect.

LIMITED LIFETIME WARRANTY

Set forth below, the manufacture warrants the fan motor for this ceiling fan to be free from defects in workmanship and material for the life of the product. Also, subject to the limitations below, the manufacturer warrants all ceiling fan parts (“ceiling fan parts” excludes the motor and parts made in whole or in part with glass) to be free from defects in workmanship and material for a period of one year after the date of purchase by the original purchaser at retail.

All claims must be made by the original purchaser, whether such purchaser purchased the product through a store or contractor. Ceiling fan part defects must be reported within the first year from the date of purchase. Parts made in whole or in part with glass and the finishes of metal and other surfaces are not warranted.

Purchasers are responsible for all costs of removing and reinstalling the product. Any damage to any part caused by ordinary wear and tear, accident, misuse, or improper installation, is not covered by this warranty. The manufacturer assumes no responsibility whatsoever for fan installation. Any service performed by a non-licensed electrician will render the warranty invalid.

The manufacturer’s sole responsibility shall be to repair or replace the motor, parts, or product within the terms stated above. The manufacturer shall not be liable for any loss or damage of any kind, including any incidental or consequential damages resulting directly or indirectly, from any breach of warranty, express or implied, or any other failure of this product. Some states do not allow the exclusion or limitation of incidental or consequential damages so this limitation may not apply to you. If the original purchaser ceases to own the fan, this warranty is voided.

Should the purchaser encounter a problem with your fan related to defects in workmanship or materials within the warranty period associated with the defective part, the manufacturer agrees to replace the defective part without charge, or at its option, to replace the ceiling fan with a comparable or superior model.

The manufacturer’s warranties are limited to the written warranties set out in this ceiling fan limited lifetime warranty. All other express and implied warranties, including, without limitation, the implied warranty of fitness for a particular purpose and the implied warranty of merchantability are disclaimed. Some states do not allow the disclaimer of implied warranties, so this disclaimer may not apply to you.

REPLACEMENT PARTS LIST

All parts are replaceable (see parts list in “Package Contents” on Page 5), however, only the parts listed below are under warranty. For replacement parts, call our customer service department at **800-527-1292**, 8:30 a.m. - 5 p.m., CST, Monday - Friday.

PART	DESCRIPTION	#7631738 PART #	#7631741 PART #
A	Mounting Bracket	7631738-A	7631741-A
B	Downrod	7631738-B	7631741-B
E	Canopy	7631738-E	7631741-E
G	Blade	7631738-G	7631741-G
O	Shade	7631738-O	7631741-O
P	Blade Arm	7631738-P	7631741-P

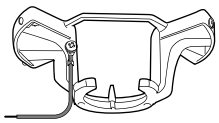

A

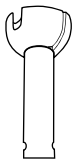

B

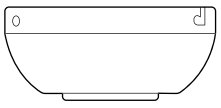

E

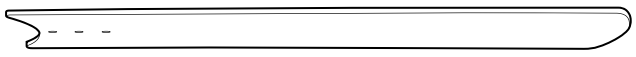

G

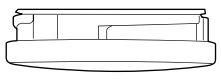

O

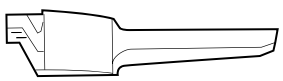

P