Installation and wiring.

1.

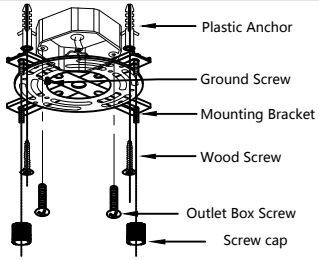

Step 1:

1: Loosen the screw caps on the ceiling plate and remove the installation bracket.

2: Plan the holes for the Mounting Bracket first, then place the Plastic Anchor inside the punched holes.

3: Take off the screws from the outlet box, and secure the Mounting Bracket onto the box with the screws taken off or Outlet Box Screw .

4: Pass the Wood Screws through the Mounting Bracket and then screw them into the Plastic Anchor .

3.

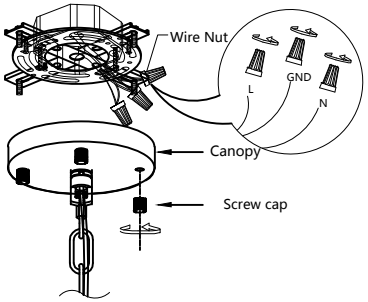

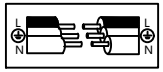

STEP 3:

1: Wrap the ground wire from the outlet box around the Ground Screw on the Mounting Bracket ,and then connect the ground wire from the fixture to the ground wire from the outlet box.

2: Connect the wires from the fixture to the house supply wires,neutral (white) to neutral wire,and hot (black) to hot wire.

3: Spread apart the wires so that the hot wires are on one side of the outlet box and the neutral wires are on the other.

4: Align the ceiling panel with the screws of the hanging board, pass the ceiling panel through the screws and push it onto the ceiling, and then fix the ceiling panel to the ceiling with the screw caps.

2.

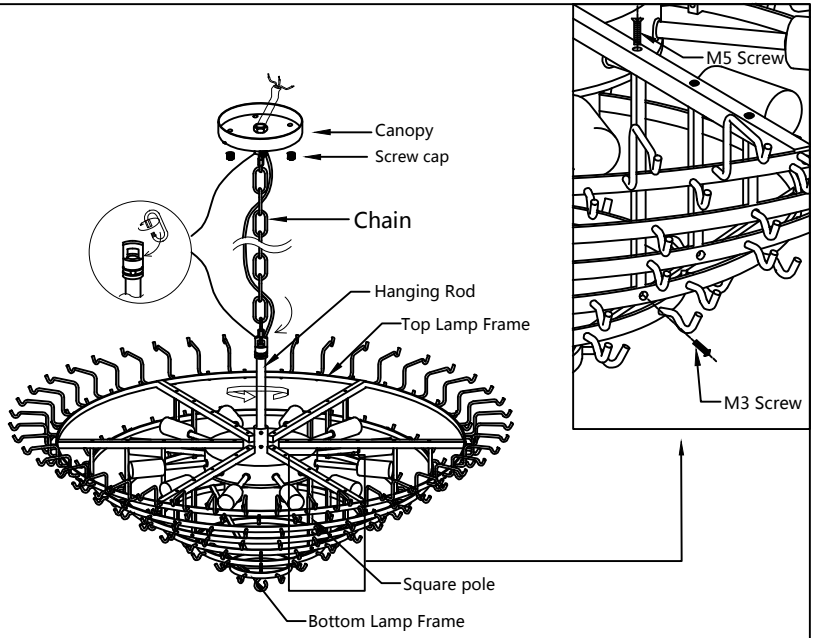

Step 2:

1: Install the lower lamp frame on the upper lamp frame with a square pole and fix it with M5 screws and M3 screws.

2: Pass the wire through the hanger rod, the chain and the ceiling plate in sequence.

3: Open the quick links on the chain, then connect the quick links at both ends of the chain to the boom and the ceiling plate, and finally lock the quick links.