Installation and Owner's Manual

DeerValley®

Smart Toilet

(DV-1S0456)

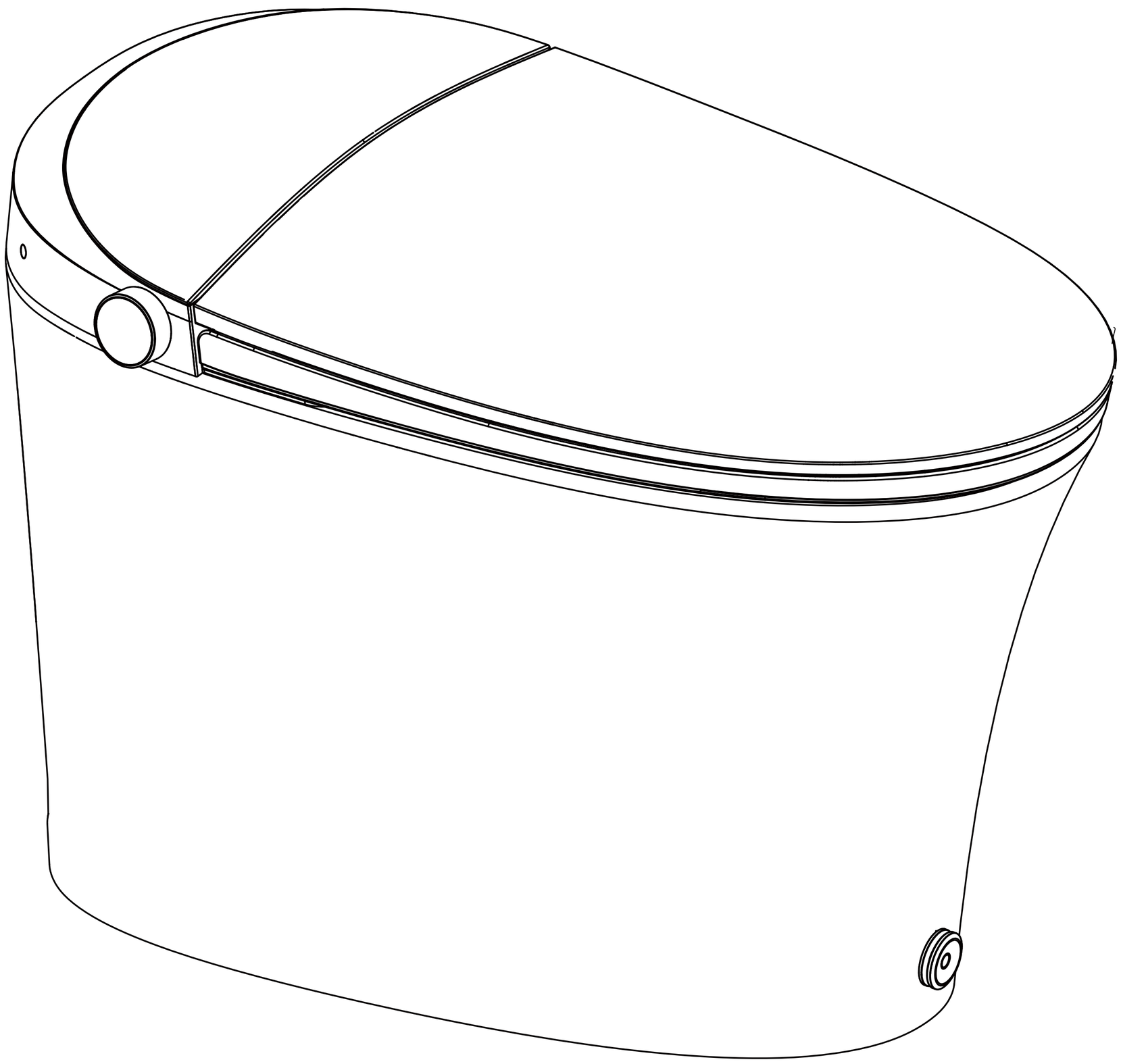

NOTE: Drawings may not exactly define contour of the product.

www.deervalleybath.com | 312-626-9466 | service@deervalleybath.com

Prior to Installation:

- Inspect toilet to ensure no damages have occurred while in shipping.
- Observe all plumbing and building codes in accordance with your state and local requirements.
- Remove old toilet.
- Make sure mounting surface is CLEAN and LEVEL.

General Recommendations:

Please read installation and maintenance instructions thoroughly before installing the toilet.

Be sure to use proper tools and always wear proper personal safety accessories for your protection.

If you have any questions or concerns please contact us:

312-626-9466
service@deervalleybath.com

TABLE OF CONTENTS

- Important Safe Guards 02
- Explanation of Terms and Symbols 03
- WARNING & Attention 04
- Product Installation 10
  - Tools needed 10
  - Parts included 10
- Parts Diagram 11
  - Smart Toilet overall view 11
  - Remote Control 12
  - Precautions before Installation 13
- Installation The Smart Toilet 14
- Install the Remote Control 18
  - Install the Remote Control 11
  - Test before Use 12
- Remote Control Operation 20
- Knob and Other Operation 24
- Battery Backup Installation 26
- Specifications 26

1. Important Safe Guards

IMPORTANT SAFEGUARDS

When using electrical products, especially when children are present, basic safety precautions should always be followed, including the following:

GROUNDING INSTRUCTIONS

This product must be grounded. In the event of an electrical short circuit, a grounded product reduces the risk of electric shock.This product is equipped with a cord having a grounded wire with a grounded plug. The plug must be plugged into an GCFI outlet that is properly installed and grounded.

DANGER – Improper use of the plug can result in a risk of electric shock.

Check with a licensed electrician or serviceman if the grounding instructions are not completely understood. Or if there is any doubt the product is properly grounded. This product is for use on a nominal 110 V circuit, and has a grounded plug that looks like the electrical plug illustrated below.

Grounding Methods

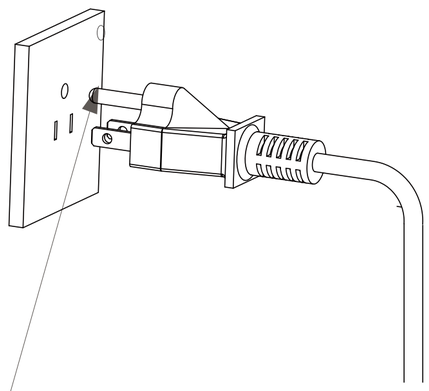

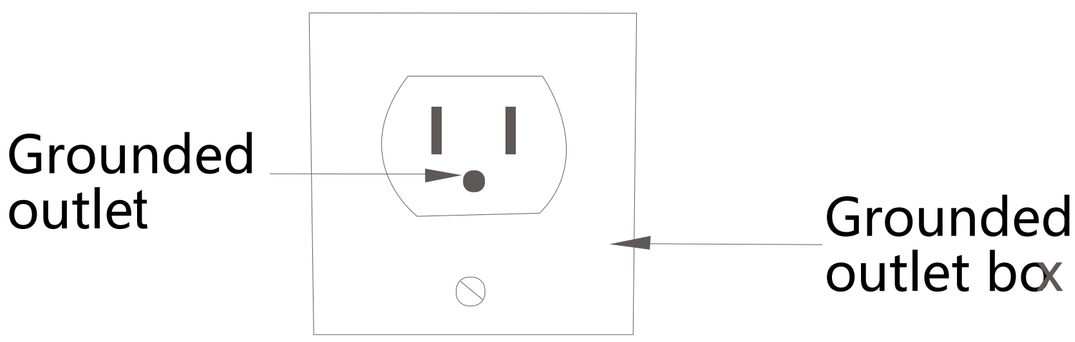

AA200

*WARNING: Risk of electric shock Connect only to a circuit that is protected by a ground-fault circuit-interrupter (GFCI).

NOTE: Specialized tools may be necessary to install DeerValley Smart Toilet, plumbing not included.

2. Explanation of Terms and Symbols

Thank you for purchasing our product. Please read this User Manual before installation and use and save it for future reference. The hazards and warnings listed herein are important to our users' safety. Significant consequences may result from failure to heed warnings.

Explanation of Terms and Symbols

WARNING • • • Indicates possible injury or death resulting from improper usage due to disregarding this message.

ATTENTION • • • Indicates human injury or property loss that may result from improper usage due to disregarding this message.

 • • • • When used with the above "Warning" and "Attention" signs, indicates a strict request to follow noted precautions.

 • • • • Prohibits any individual from performing any action with this symbol.

 • • • • Prohibits any individual from disassembling the product.

 • • • • Keep product away from any wet environments, including, but is not limited to, humid environments, close proximities to baths, showers or sinks.

 • • • • Do not touch.

 • • • • Do not touch with a wet hand.

 • • • • Keep away from any extreme heat or fire.

 • • • • Operate only as instructed.

 • • • • Unplug the unit from power.

 • • • • Protective grounding.

NOTE: Drawings may not exactly define contour of the product.

312-626-9466
www.deervalleybath.com

3. WARNING & Attention

⚠ WARNING

This product needs to be properly grounded.
Risk of electric shock. If unsure, contact an electrician.



Do not place a lit cigarette along with other burning objects into the unit.
Risk of fire.



Do not touch, insert or pull out the power plug with a wet hand.
Risk of electric shock.



Do not use during thunderstorms (pull out the power plug during storms).
Failure in doing so may lead to injury or malfunction.



Do not use a power socket in poor condition or a damaged power plug.
Risk of fire and/or electric shock.



When the seat or lid is damaged, to avoid any harm, be sure to unplug the unit from power, shut off the water supply and contact your local distributor for replacement.
Risk of fire and/or electric shock.

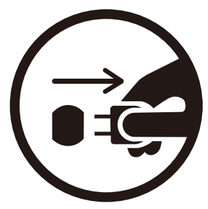

The power socket in use should be within the specified range (AC 110 V ± 10%, Max current > 10A).
Risk of fire and/or electric shock.



NOTE: Drawings may not exactly define contour of the product.

⚠ WARNING

Regularly unplug the unit from power and wipe off any dust on the plug using a dry cloth.
Risk of fire.



Young children, the aged and the physically disabled should be given supervision by a person responsible for their safety while using the unit.
Otherwise, prolonged use may cause low temperature burns.



Do not pull, damage, bend, twist, stretch, roll, bundle, clamp or squeeze the power cable. Do not place anything on power cable.
Risk of fire and/or electric shock.

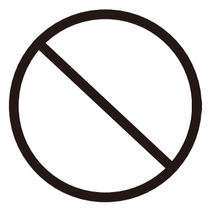

This product is not a toy. Advise children not to play with product.
Risk of injury.



If the power cord is damaged, to prevent any injuries or accidents, it should be replaced by a professional.
Risk of fire and/or electric shock.



For cleaning or maintenance of plastic parts, do not use any harsh cleaning agents. (These include but not limited to concentrated sulfuric acid, concentrated nitric acid, glacial acetic acid, carbon tetrachloride, chloroform, acetone, butanone, benzene, methylbenzene, phenol, methylphenol, dimethylformamide, methyl ether, soybean oil, acetate, 40% nitric acid, thick salt acid, 95% alcohol, kerosene,gasoline, or brake oil, etc.)

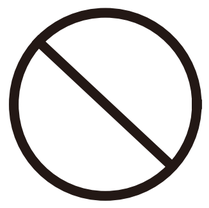

Otherwise, the plastic part may crack and cause personal injury;
Risk of fire and / or electric shock.

NOTE: Drawings may not exactly define contour of the product.

312-626-9466
www.deervalleybath.com

⚠ WARNING

Do not disassemble, repair or alter this product on your own. Call in a professional or contact HuiDa for future advise.
Risk of fire, electric shock, and/or other accident that may lead to injury.

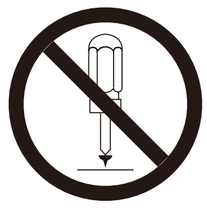

Do not use industrial or polluted water.
Risk of cystitis, dermatitis and electric shock and fire due to internal corrosion of the unit.



Do not apply any force to the unit's seat and lid. Do not stand on the lid or open or close the lid and the seat forcefully.
Risk of product damage and user injury.



Do not add water or detergent into the unit or onto the remote control. Do not splash water or cleaner on the product and power plug.
Risk of fire and electric shock.

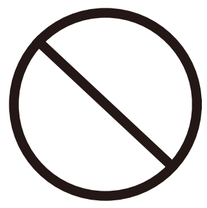

Do not place your hand or any other object into the dryer outlet, and do not cover the dryer and dryer outlet when product is.
Risk of fire, electric shock, and/or other accident that may lead to injury.

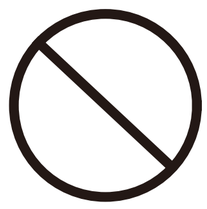

Do not install or use the unit in a damp and easily immersed bathroom.
Do not spray water on this product or rinse it with water to prevent damage.
Risk of fire and electric shock.



Do not spray urine at the dryer.
Risk of electric shock.

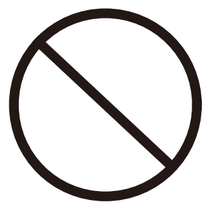

NOTE: Drawings may not exactly define contour of the product.

312-626-9466
www.deervalleybath.com

⚠ BATTERY WARNING

Read the following for proper battery usage:
- Properly install the battery according to its correct polarity.
- Remove the battery during long periods without use.
- Replace the battery before it reaches the end of its usage. Failure to do so may result in interrupted signals.
- Cover the battery with tape before disposal. This will prevent battery fluid leakage that may cause fire and / or other damages.
- Place the battery out of children and infant reach.
  If battery is swallowed, contact a doctor immediately.
- If battery fluid leaks onto user, quickly rinse off with clean water.



Do not do the following with the batteries:
- Do not hold or store with metal objects (such as a necklace or a watch).
- Do not mix new and old batteries.
- Do not pull apart battery or throw it into water and/or fire.
  Battery fluids may cause a fire.

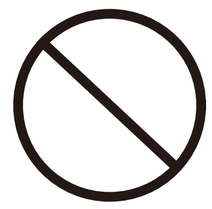

⚠ ATTENTION

Do not use the heated seat or dryer for a long time with high or middle temperature.
Risk of burns.

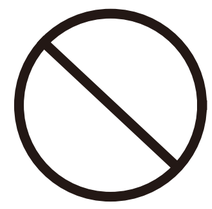

Avoid direct sunlight or heat.
Risk of product discoloration.

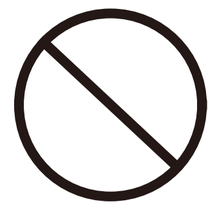

While using the unit, make sure that the skin is in contact with the seat sensor area. Otherwise, product may not operate correctly.
Children may have difficulty staying in contact with sensor area.

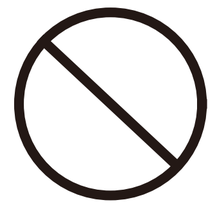

NOTE: Drawings may not exactly define contour of the product.

312-626-9466
www.deervalleybath.com

⚠ ATTENTION

To avoid danger from false reset of the thermal breaker, do not supply power through an external switching device, such as a timer, or connect to a circuit that is periodically turned on and off by a general-purpose component.

Do not hit the ceramic with gravity to prevent damage and water leakage.

Do not spray urine on the nozzle.
Dirt may cause clogging.

Please do not bury cementitious materials (cement mortar, etc.) in the toilet base to prevent the toilet from being cracked due to expansion.

Do not flush newspaper, diaper pads, sanitary napkins and other items that are easily blocked into the toilet.

When replacing the filter, be sure to turn off the angle valve.
When the filter is being installed, be sure to fasten it with force.
Risk of leakage.

Do not use the unit in an environment below 0°C.

NOTE: Drawings may not exactly define contour of the product.

⚠ ATTENTION

Unplug the unit when the product is in disuse for a long time. Make sure to shut off the water supply and drain the water inside the product.
Risk of fire, leakage and product damage.

Do not use old hose to connect to unit. Use the one provided with your product. Anything else connected to the older hose may need replaced.
Risk of water leakage and property loss.

When storing or transporting in cold climate, make sure to drain the water from the unit. Product may crack and other damages may occur due to freezing water.
Risk of fire, leakage, and product damage.

In case of sudden power failure, unplug the power plug and turn off the angle valve to prevent water leakage.
Risk of water leakage or property loss.

WARNING– To reduce the risk of burns, electrocution, fire, or injury;

1. Close supervision is necessary when this product is used by, on, or near children.
2. Use this product only for its intended use as described in this manual. Do not use attachments not recommended by the manufacturer.
3. Never operate this product if it has a damaged cord or plug, if it is not working properly, if it has been dropped or damaged, or dropped into water.

Return the product to a service center for examination and repair.

1. Keep the power cord away from heated surfaces.
2. Never block the air openings of the product or place it on a soft surface, such as a bed or couch, where the air openings may be blocked. Keep the air openings free of lint, hair, and the like.
3. Never use while sleeping or drowsy.
4. Never drop or insert any object into any opening or hose.
5. Do not use outdoors or operate where aerosol (spray) products are being used or where oxygen is being administered.
6. Connect this product to a properly grounded outlet only. See Grounding Instructions.

NOTE: Drawings may not exactly define contour of the product.

4. Product Installation

(1) Tools needed

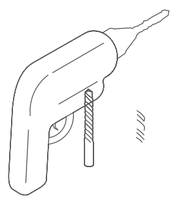

Drill(with 0.24inch)Bit

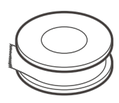

Raw Tape

Utility Knife

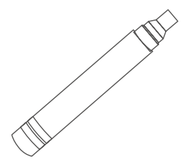

Marker



0.9-1inch (Adjustable Wrench)

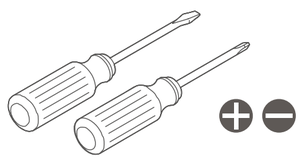

Screwdriver

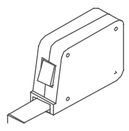

Tape Measure



Measuring Cup

(2) Parts included

Smart Toilet 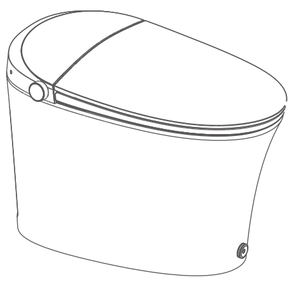	T-Valve 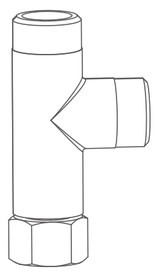	Wax Ring 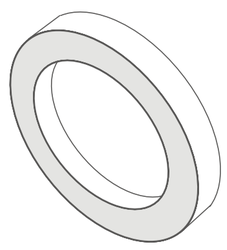
Remote Control assembly 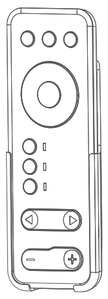	Operating instruction and other prints 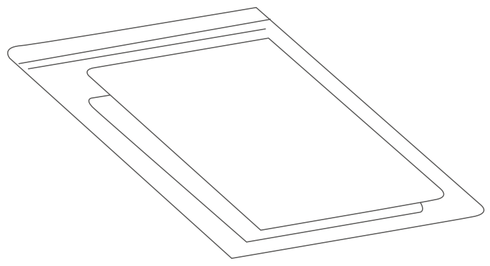	Connector 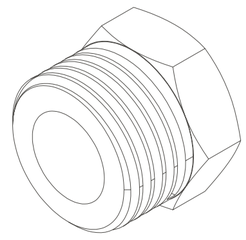
Floor Bolts 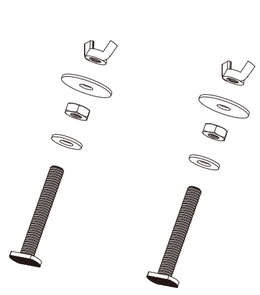	Please confirm that all articles in the package are complete. If any of parts are missing, please contact our customer service department at(Customer fill in the after-sales phone number). The picture is for reference only, please refer to the actual product.	

NOTE: Drawings may not exactly define contour of the product.

3. Parts Diagram

(1) Smart toilet overall view

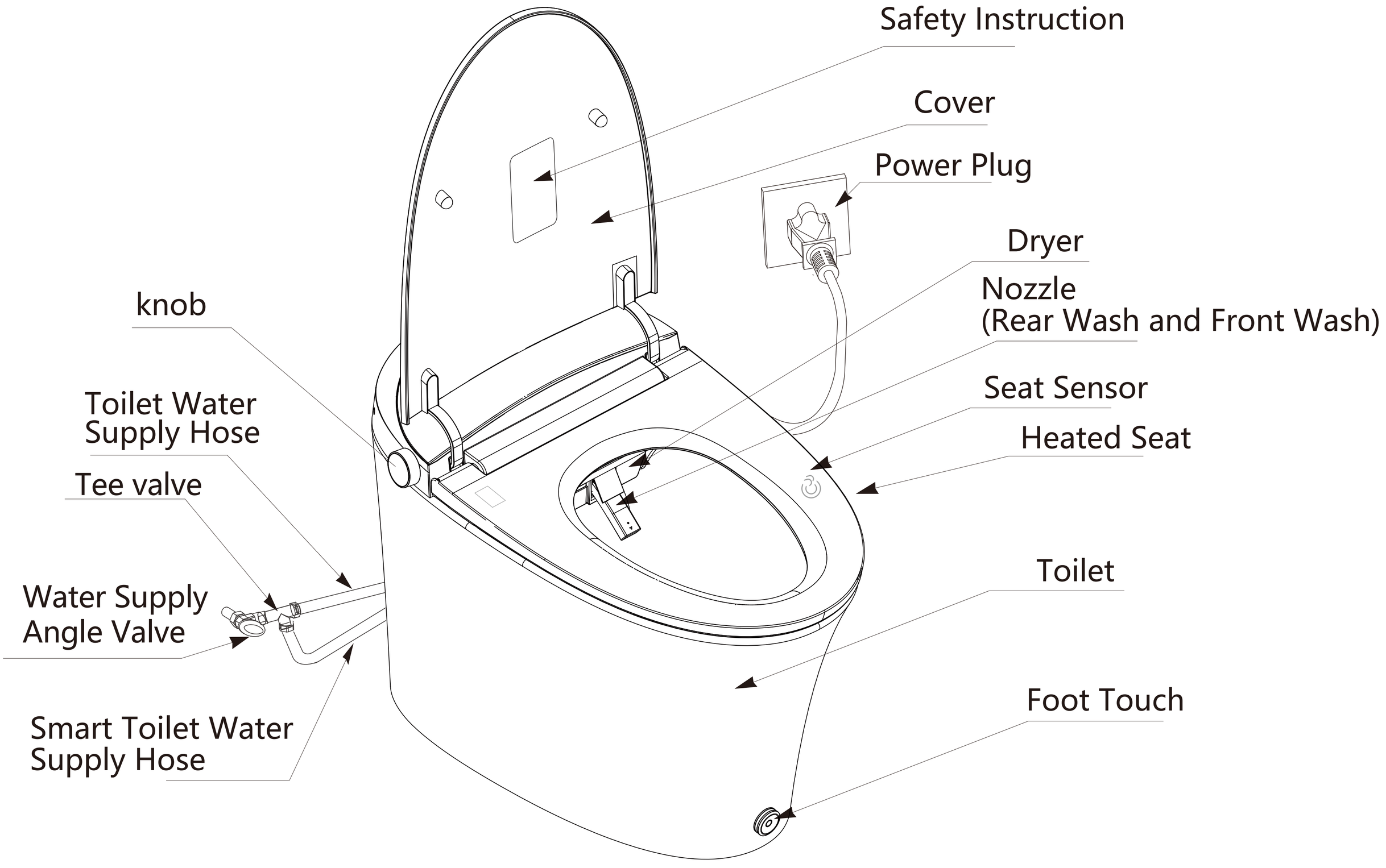

knob

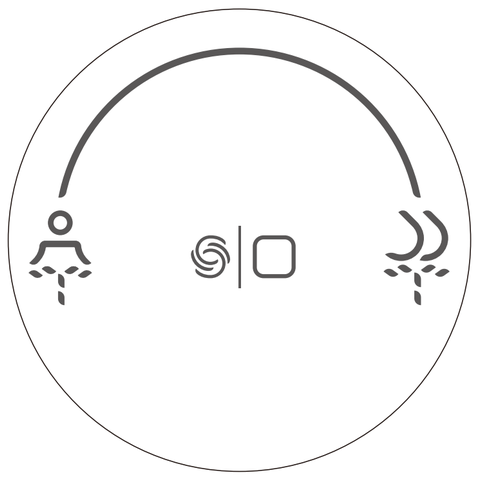

- **The appearance and functions of the real product shall prevail.**

NOTE: Drawings may not exactly define contour of the product.

312-626-9466
www.deervalleybath.com

(2) Remote Control

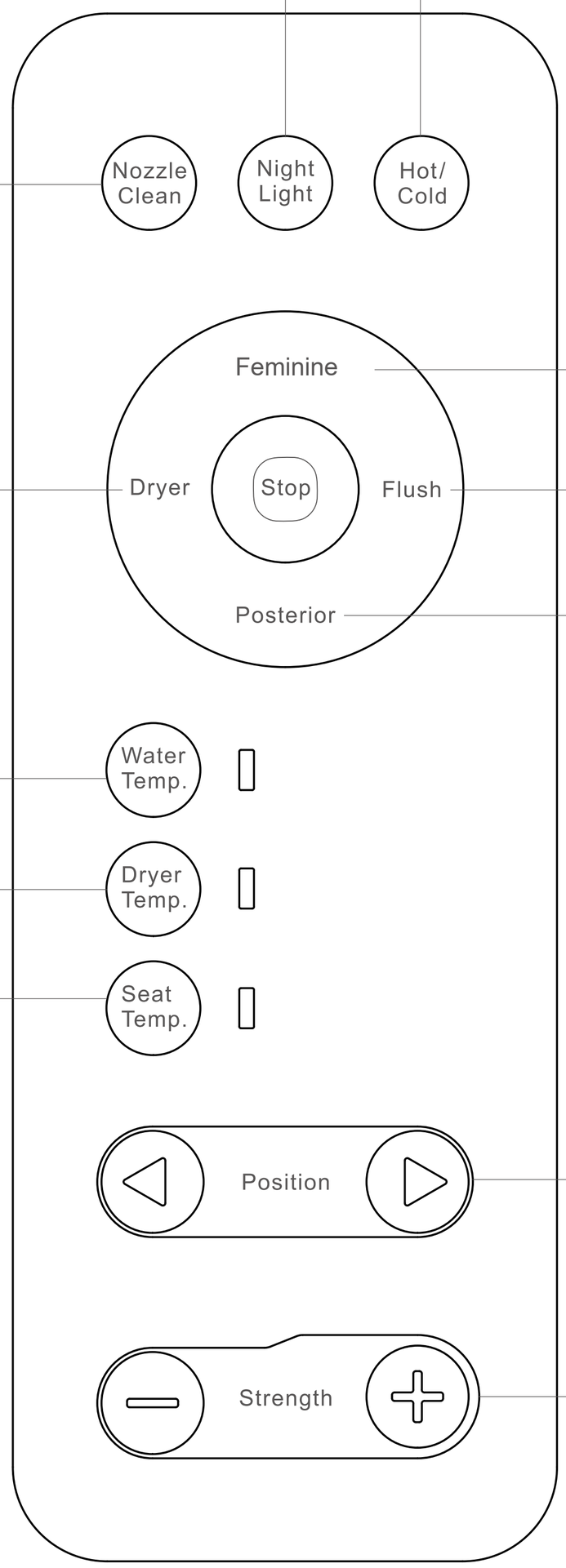

Night Light

On/off of night light

Hot/Cold

Alternate wash with hot and cold water

Nozzle Clean

Key for nozzle clean

Feminine

Used for wash of female's

Dryer

Dry washed part with warm air

Flush

Flush after use

Water Temp.

Water temperature can be adjusted at wash

Posterior

Used for posterior wash

Dryer Temp.

Temperature of warm air can be adjusted

Position

Adjustment of 5 levels can be realized at nozzle's position

Seat Temp.

Temperature of seat ring is adjustable

Strength

Adjust strength of posterior and feminine wash

NOTE: Drawings may not exactly define contour of the product.

(3) Precautions before Installation

Confirmation of water pressure

- The minimum dynamic operating water pressure is 25 Psi, and the maximum static water pressure is 80 Psi.

Determination method for minimum water flow

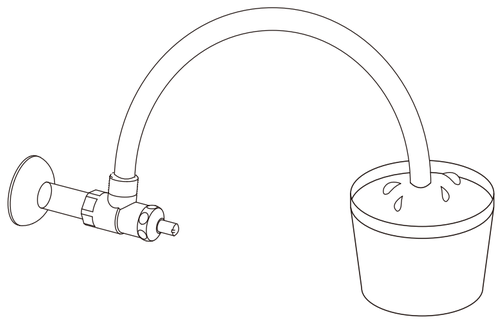

Open the angle valve for water supply.
The measured water flow for 10 seconds should exceed 3.4L.
※If the above conditions cannot be met, the best flushing effect cannot be achieved and an additional booster pump is required to increase the pressure.

(Tools: stopwatch, measuring cup.)

Confirm dimensions of product with installation space

Wall

Unit: inches

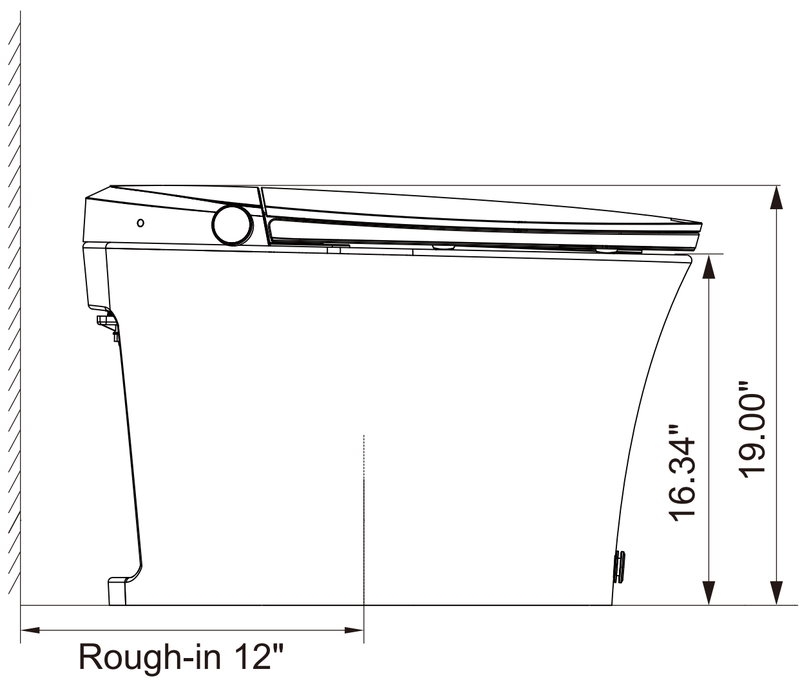

Side View

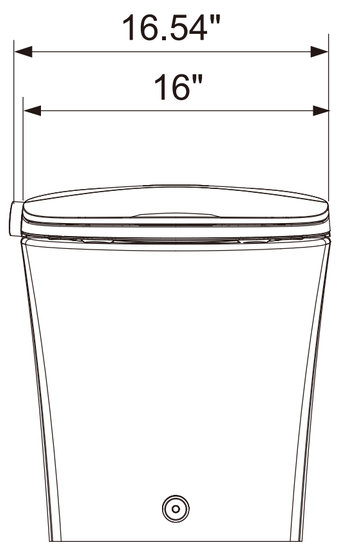

Front view

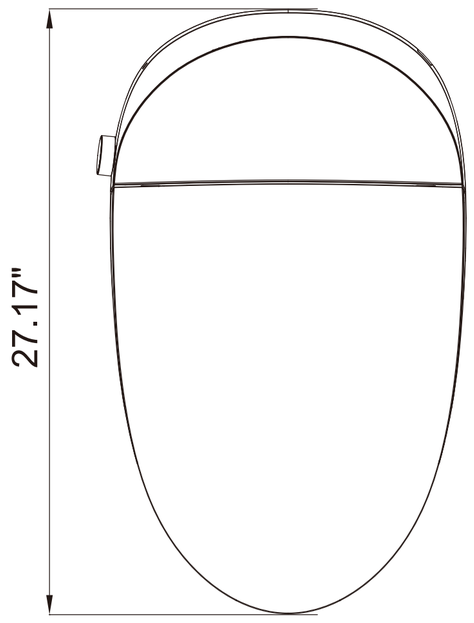

Top View

NOTE: Drawings may not exactly define contour of the product.

312-626-9466
www.deervalleybath.com

4. Installation The Smart Toilet

(1) Draw a cross marker on the drain outlet on the ground.

- Clean the floor and wipe off any excess dust or dirt . Failure to install on an cleaned surface will affect the quality of installation.

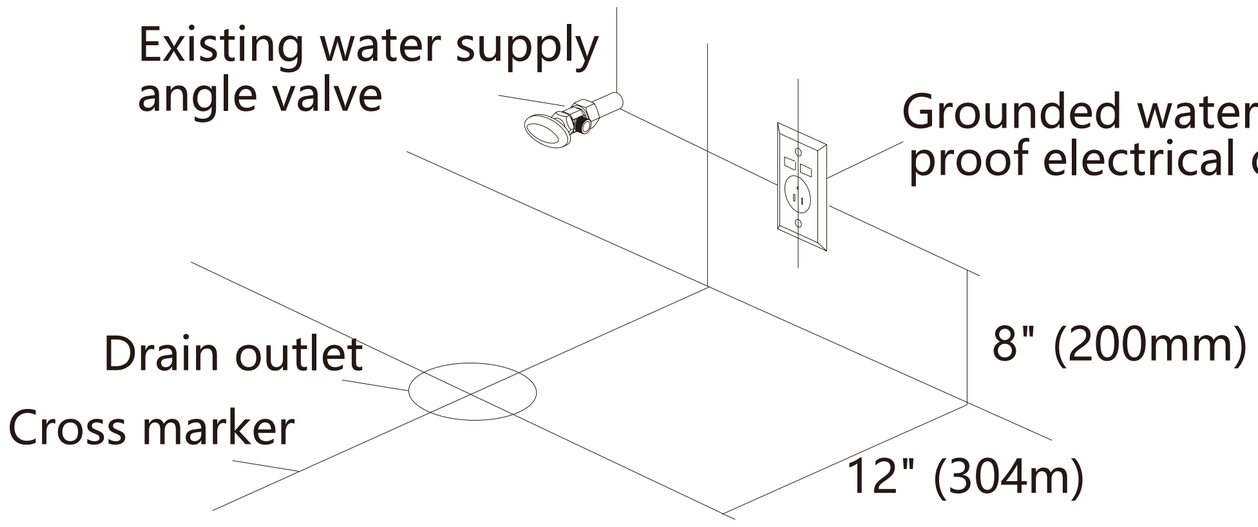

(2) Installation of floor flange.

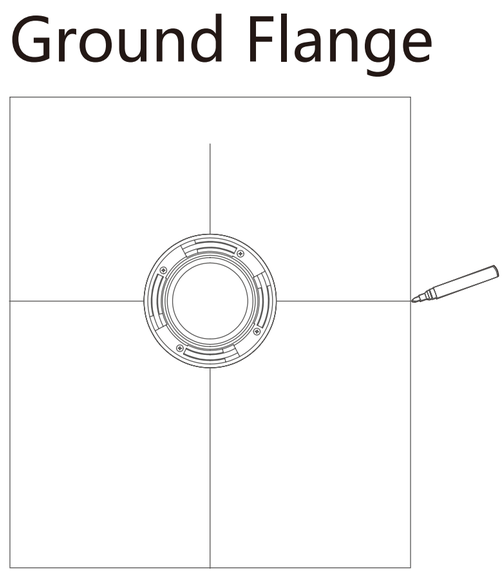

(3) Install smart toilet bottom flange anchor screw.

- Turn the ceramic body over laterally and place on a prepared foam surface. By visual measurement, draw a line on one lateral side of the ceramic body point of the drain outlet perpendicular to the plane against the central of ceramic bottom, and the same for the other lateral side, and draw a line perpendicular to the floor from the front central point of ceramic body.

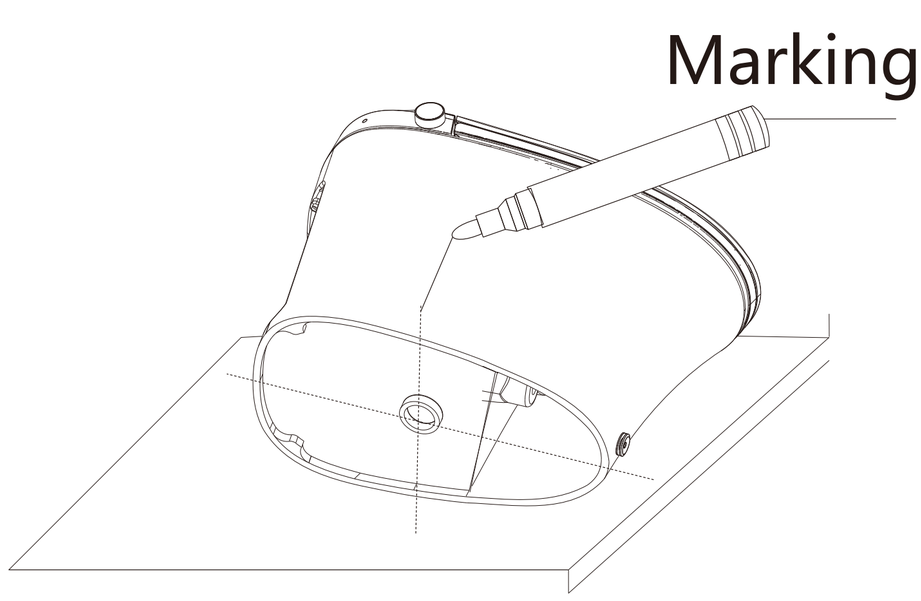

NOTE: Drawings may not exactly define contour of the product.

(4) Install the wax ring and brass floor bolts onto floor flange.

- Center and press the wax ring on the floor flange. Insert the 2 brass floor bolts flat head thru the appropriate slot in the floor flange. Use the provided plastic floor bolt washer to secure the floor bolts on the floor flange. Brass bolts should remain verticle FIGURE 5A. Install the wax ring at the sewage outlet of the product FIGURE 5B.

FIGURE 5A

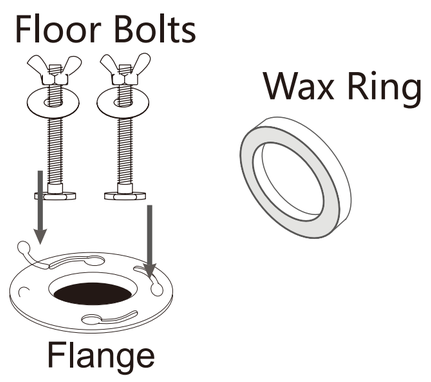

FIGURE 5B

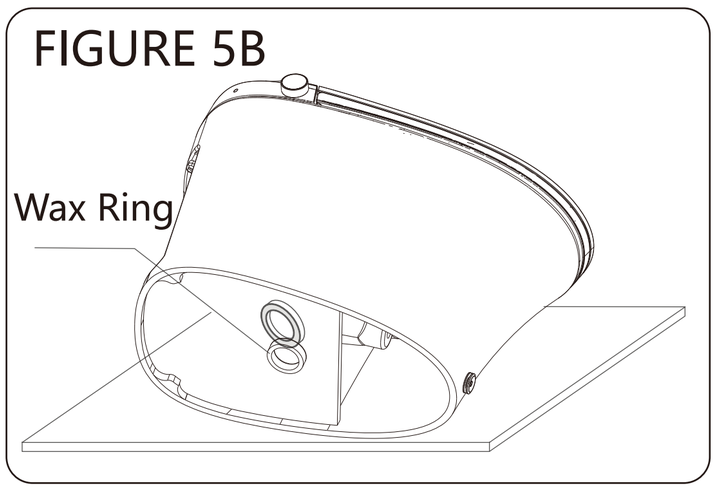

(5) Preparing the toilet seat for toilet bowl installation.

- Hold both seat and cover vertical, pull upward to detach them from ceramic bowl. Movethe seat forward as shown.



(6) Installing the toilet bowl onto floor flange

- Two people to lift the toilet bowl, slowly lower the bowl onto the floor flange use the guide marking as the toilet reference. Making sure the floor bolts on the floor flange completely come through bolt opening on the bottom of toielt bowl by viewing from the back of the seat.
- Next, press down the toilet bowl firmly onto the floor so the wax ring can create the full seal.
- Lastly, screw down the nuts on the floor bolts by hand to secure the toilet bowl on the floor from the opening behind the back of the seat.

FIGURE 7A

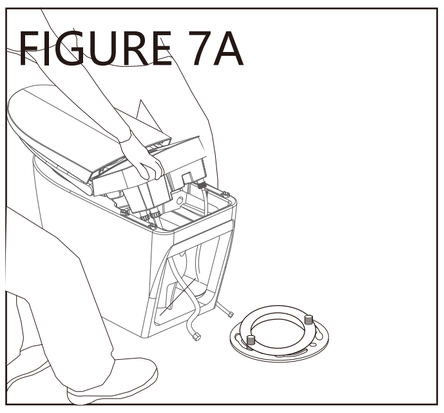

FIGURE 7B

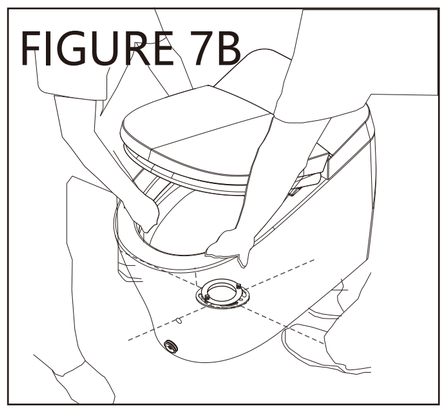

FIGURE 7C

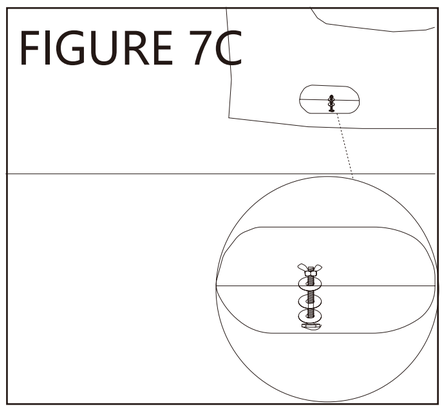

FIGURE 7D

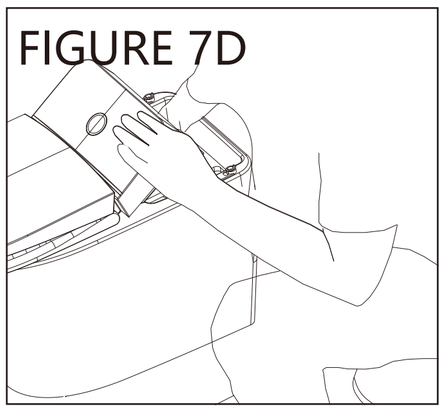

Caution: Do not move the toilet bowl around once the toilet bowl is in position.
It can damage the wax ring seal and result in water leakage.

NOTE: Drawings may not exactly define contour of the product.

(7) Conncting the tee valve to shut off valve and connecting braided water supply hoses.

- With the 3/8" male connection facing to the right, apply Telflon tape and screw on adapter (supplied).

FIGURE 9A

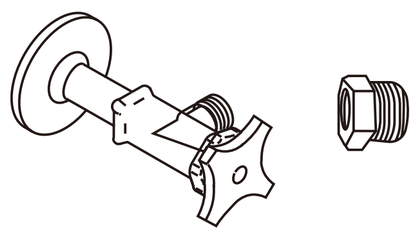

FIGURE 9B

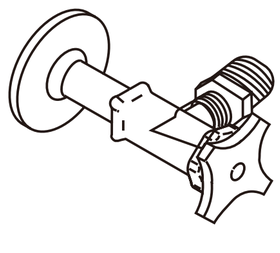

- Connect tee valve to male thread on adapter (apply Telflon tape to male threads). Connect braided supply tubes to tee valve male connections.

  - 1/2" seat water supply hose to bottom of tee valve
  - 1/2" toilet water supply hose to right side of tee valve

  Note: Use Telflon Tape on all threaded connections to insure a water tight seal.

FIGURE 9C

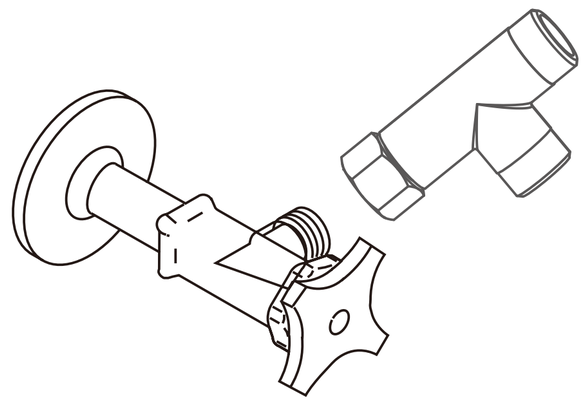

FIGURE 9D

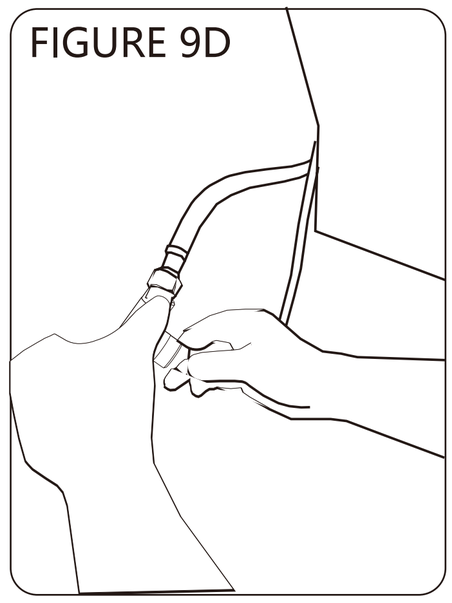

(8) Confirm the water supply.

- Open the water supply angle valve to the greatest extent as shown in the drawing.
- Make sure there is no water leakage in each connection part. If there is water leakage, please re-tighten the nut for re-installation.

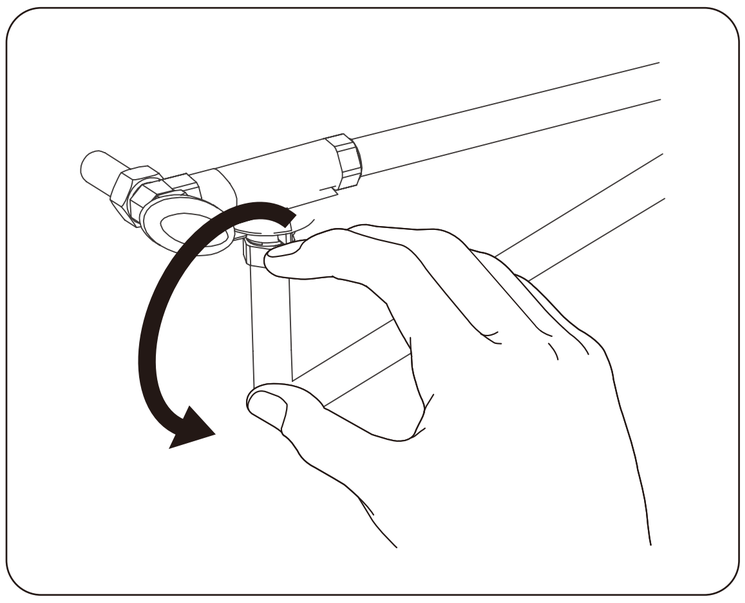

NOTE: Drawings may not exactly define contour of the product.

(9) Connect the power supply.

- Connect the ground wire.
- Power plug into the AC 120V socket.
- Confirm whether the power is connected.

Note:
Confirm indicator light on the power plug. A lit-up power indicator light will confirm that the smart toilet is powered-on. When powered on, press and hold the knob for 3 seconds to enter standby mode.

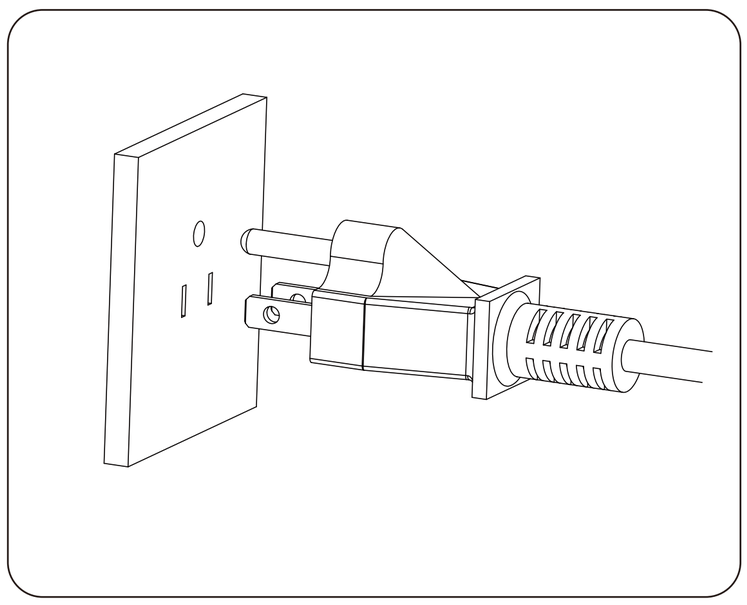

NOTE: Drawings may not exactly define contour of the product.

5. Install the Remote Control

(1) Install the Remote Control

1. According to the location of the screw holes of the remote control holder, drill two holes with a 0.24inch-diameter drill.bit on the wall with a depth greater than 2inch.
2. Install the expansion tube into the holes.
3. Place the remote control holder onto the fixing hole.
4. Fix the remote control holder with the configured expansion screws.
5. Open the battery area of the remote control and install new batteries.
6. Place the remote control on its holder.The specific steps are shown in the drawings below.

If the wall for installation is of a specific material (such as wood panel, MDF), please use a suitable fixing method.

The remote control should be installed in a place that is not easily exposed to water.

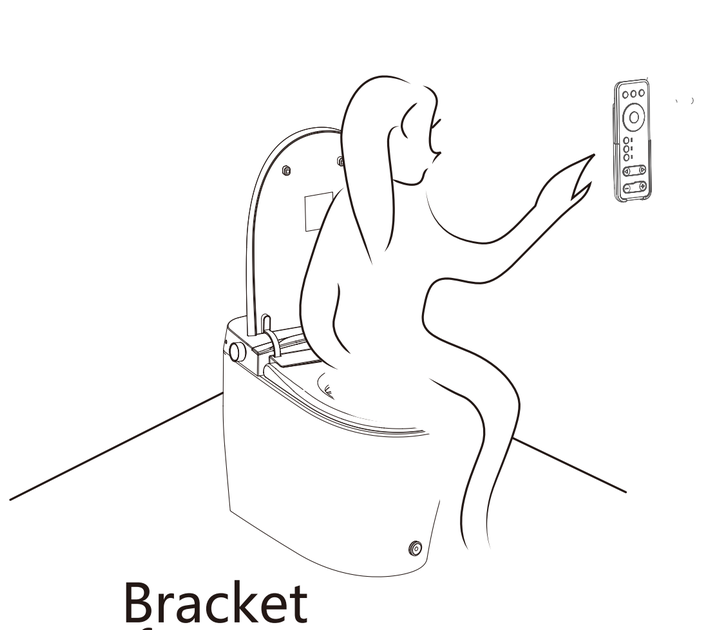

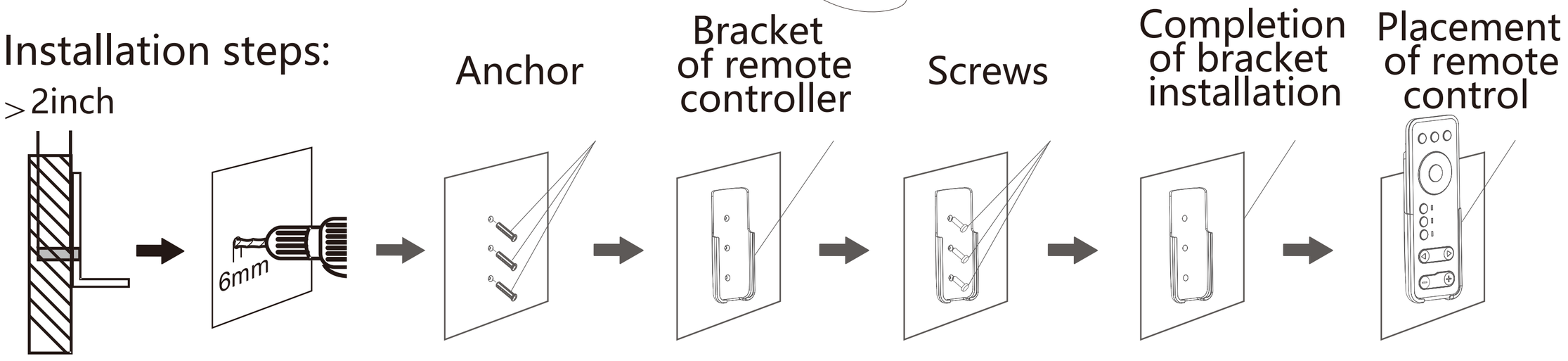

NOTE: Drawings may not exactly define contour of the product.

(2) Test before use

Test run (test all function buttons on the remote control and the knob on toilet body.)

- Is each function of the product normal?
  Are the rear wash and front wash (including spray strength adjust ment, nozzle position adjustment), dryer, air temperature, water temperature and seat temperature, nozzle clean working normally?
  All the above series of actions should be checked.

- Operation to test rear wash process
  Please use your hand to cover the sensor area, turn the knob

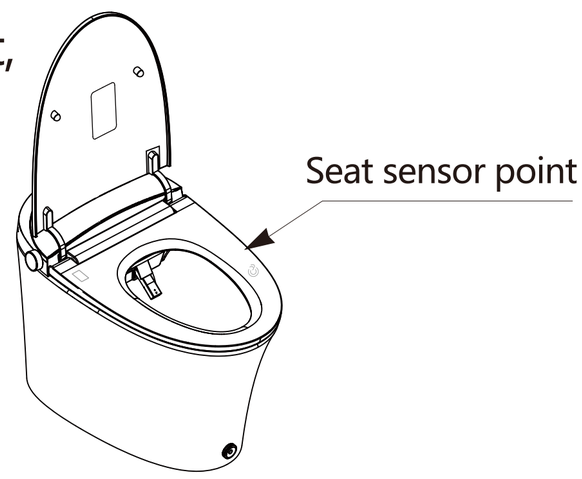

Code matching of remote controller

Code matching of the remote controller has been completed at delivery of the product. In case of malfunctioning of the remote controller, match the codes as per the following method.

1.Pull off the plug of the product, hold on the stop key till the level indicator flickers and then loosen it.

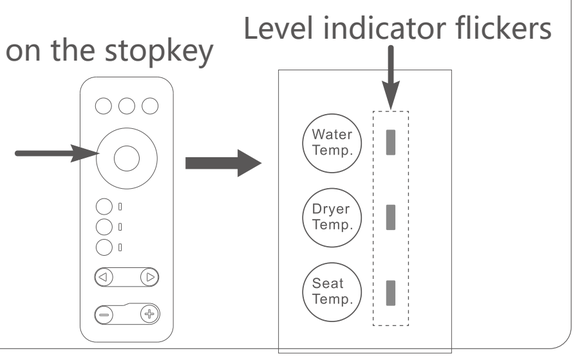

2.Put the remote controller close to the product and insert the

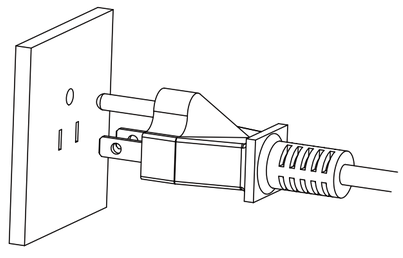

3.The level indicator stops flickering and is normally on. All level indicators (in red) are normally on

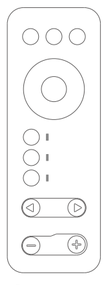

4.Code matching succeeds.

NOTE: Drawings may not exactly define contour of the product.

6. Remote Control Operation

The product has a built-in sensor in the seat. If user is not seated properly, the rear wash, front wash and dryer functions cannot be operated.

■ Feminine

Press "Feminine " key.

Water flow for wash is jetted out of the front end of the nozzle, and the private part of female is washed by way of wash in movement. Press it again to turn off wash in movement.

■ Posterior

Press "Posterior" key.

Water flow for wash is jetted out of the front end of the nozzle and washes the posterior by way of wash in movement. Press it again to turn off wash in movement.

■ Flush

Press "Flush" key.

The product flushes for once.

■ Stop

Press "Stop" key to stop the product.

For posterior and feminine wash, there's an auto-stop function 4 minutes later.

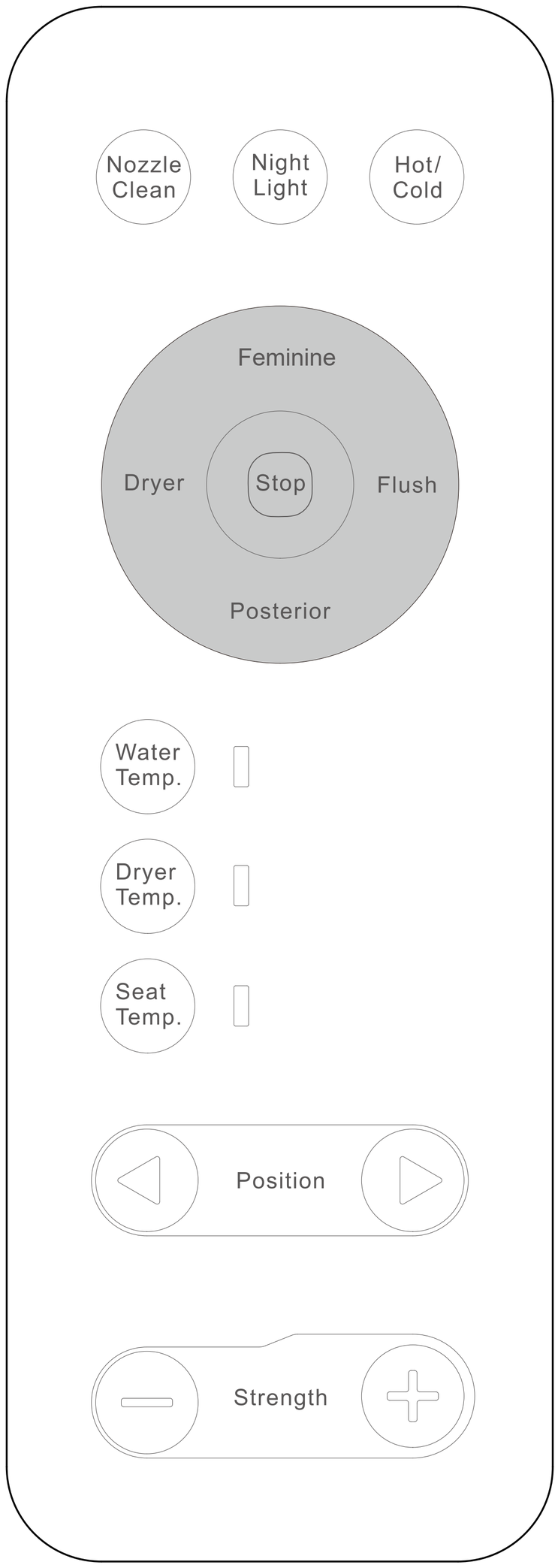

NOTE: Drawings may not exactly define contour of the product.

312-626-9466
www.deervalleybath.com

Hot/Cold

Press "Hot/Cold" key, and Hot/Cold function will be enabled or disabled.

In wash mode, press Hot/Cold key to realize cold and warm water wash alternately.
This function can only be used in wash mode.

Dryer

Press "Dryer" for drying washed part.

Press Dryer for drying washed part.
When it is switched to warm-air temperature, press " Dryer Temp." key, current temperature level will be displayed when the key is pressed for the first time. When it is pressed again, it will be switch to temperature level, and proper temperature can be set.

- When the key is pressed, display indicator is switched among 「Off (display indicator is off)」, 「Low level (display indicator is in blue)」, 「Middle level (display indicator is in purple)」 and 「High level (display indicator is in red)」. Warm air has automatic stop function 4 minutes later.

Reference

- After wash, wipe off the water drops with tissue, and press Dryer key for drying quickly.

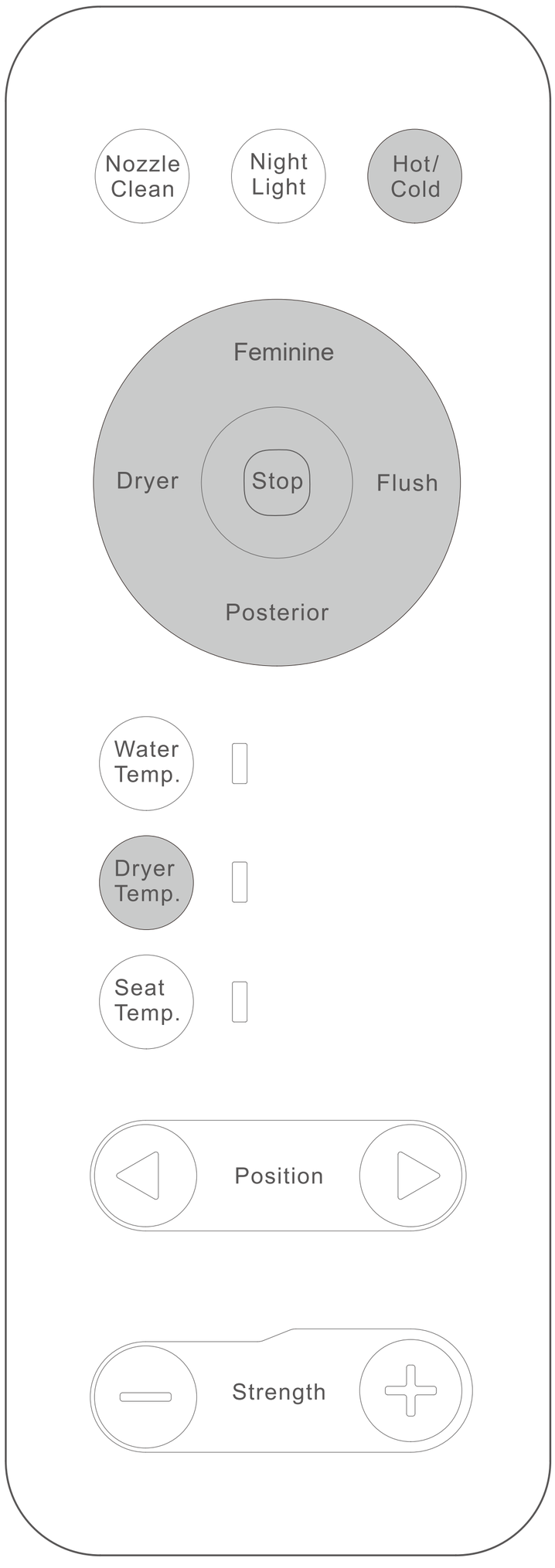

⚠ Warning

When a child, an old man, a patient, a person with poor skin or who moves slowly, or a person unable to adjust the temperature, or a person having drunken too much, is using warm air for drying, the accompanying person shall set air temperature to "Low level".

NOTE: Drawings may not exactly define contour of the product.

■ Water Temp.

Press "Water Temp." key to adjust water temperature for wash.

Current temperature level will be displayed when the key is pressed for the first time. When it is pressed again, temperature level will be switched, and proper temperature can be set.

- When the key is pressed, display indicator is switched among 「Off (display indicator is off)」, 「Low level (display indicator is in blue)」,Middle level (display indicator is in purple)」and 「High level (display indicator is in red)」.

■ Seat Temp.

Press "Seat Temp." key to adjust seat ring temperature.

Current temperature level will be displayed when the key is pressed for the first time. When it is pressed again, temperature level will be switched, and proper temperature can be set.

- When the key is pressed, display indicator is switched among 「Off (display indicator is off)」, 「Low level (display indicator is in blue)」, 「Middle level (display indicator is in purple)」

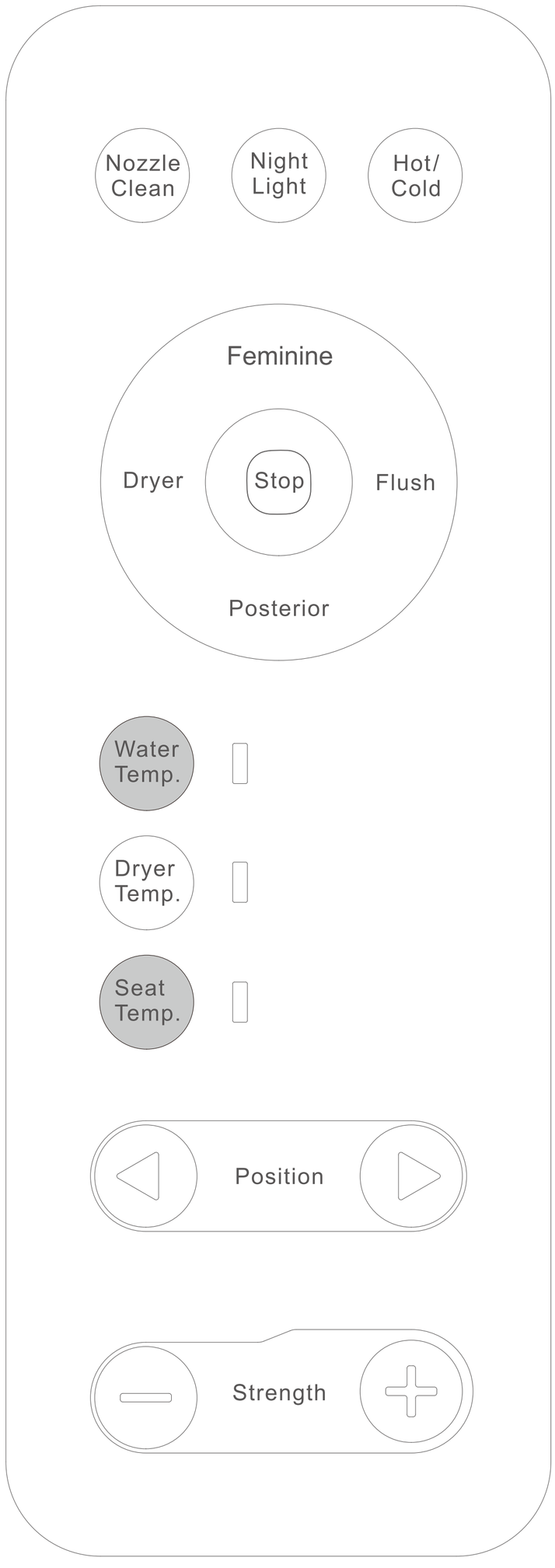

⚠ Warning

When a child, an old man, a patient, a person with poor skin or who moves slowly, or a person unable to adjust the temperature, or a person having drunken too much, is using this product, the accompanying person shall set air temperature to "Low level".
Do not use the product for a long time, or low temperature burning may occur.

NOTE: Drawings may not exactly define contour of the product.

312-626-9466
www.deervalleybath.com

Nozzle Clean

Press "Nozzle Clean" key.

●The cleaner sticks out for manual wash. This function can only be used when the human body or other objects do not contact the seat ring sensing area.
●When the human body is sitting in place, press “Nozzle Clean key” to realize on/off of wash with air bubbles.
This function can only be in wash mode.

Night light

Press "Night light" key.

Night light will be on or off.

Position

Press "Position" key.

Position can be adjusted within five high or low levels.

Strength

To change wash strength, press "+" or "-" key.

Wash strength can be adjusted for 3 levels. For pressing each time, suitable water flow strength can be set.

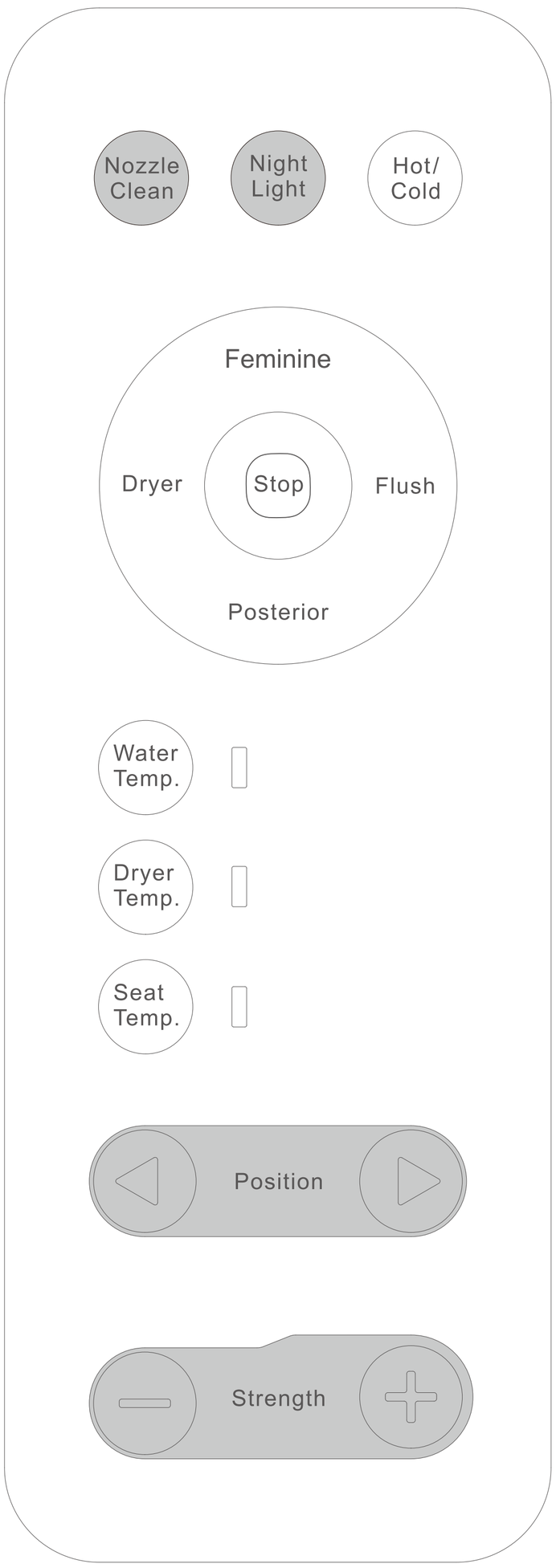

Note

●When water pressure is low, wash strength will be weak, and sometime water cannot be jetted out. At this time, increase wash strength.
●Please sit on the seat ring inwards, thus splashed water will be less.

NOTE: Drawings may not exactly define contour of the product.

7. Knob and other operation

Feminine

Powered on and seated, with front wash, reash wash and dryer functions off.

Turn the knob counterclockwise for auto front wash with default oscillating function.The entire process will consist of 4 mins front wash + 3 mins dryer+ flushing once while drying. During the front wash stage,Turn the button counterclockwise again will bring it to the drying stage.

Posterior

Powered on and seated, with front wash, reash wash and dryer functions off.

Turn the knob clockwise for auto rear wash with default oscillating function.The entire process will consist of 4 mins rear wash + 3 mins dryer+ flushing once while drying. During the rear wash stage,Turn the button counterclockwise again will bring it to the drying stage.

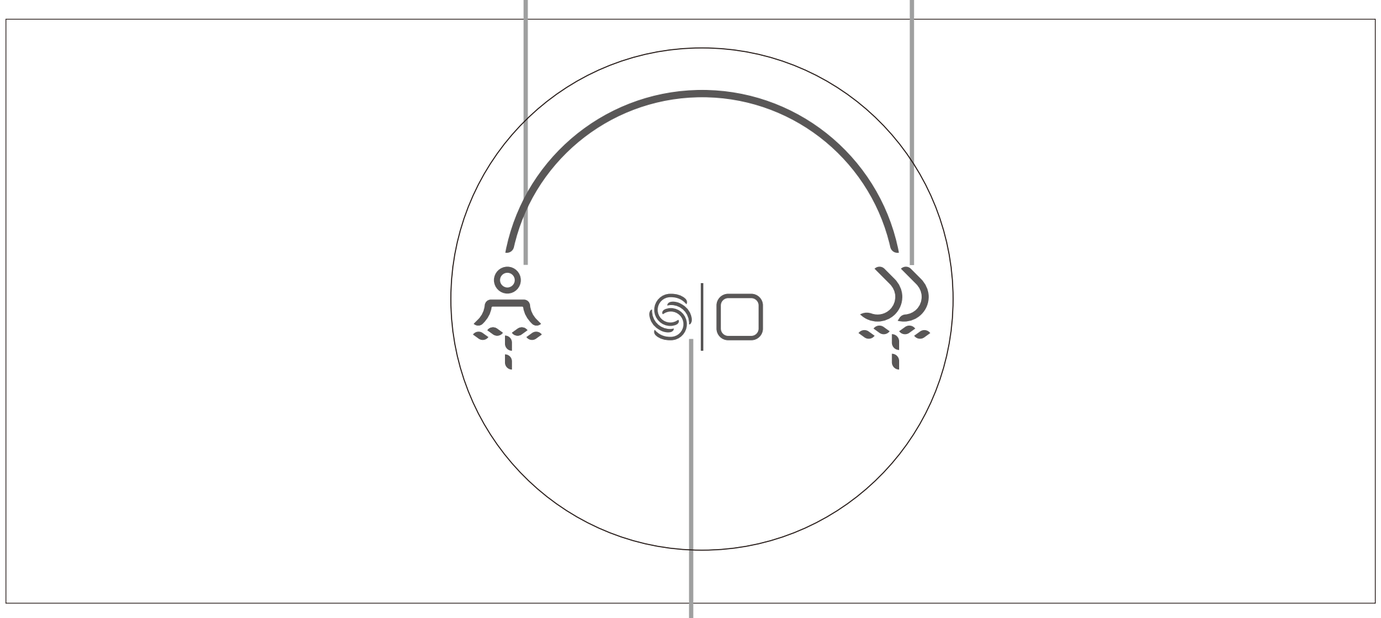

Power/Stop

Powered off: press to flush; press and hold for 3s to power on.
Powered on: press to stop functions;
press and hold for 3s to power off when not seated; press and hold for 3s to start drying when seated.

Flush

Powered on with no functions running.
Short press the knob to flush the toilet.

NOTE: Drawings may not exactly define contour of the product.

■ Deodorization

The function will operate automatically.

Deodorizing fan automatically turns on after seating and turns off 3 minutes after leaving the seat.



■ Auto flush

Human body leaves the seat sensor area after seating.

When the human body leaves the seat after seating, it will automatically flush once.

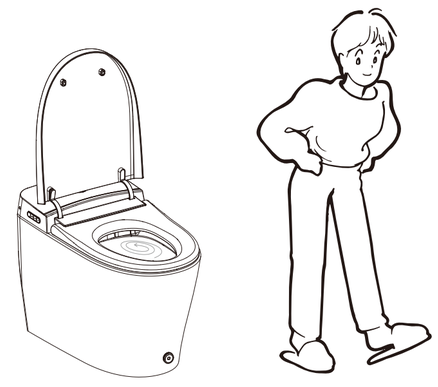

■ Kick to Flush

Kick the "foot touch button".

to flush the toilet.
Do not kick with force or high frequency.



NOTE: Drawings may not exactly define contour of the product.

8. Battery Backup Installation

●Take out the battery box, pry open the two sides of the clasp with a screwdriver, take out the battery box cover;

●Align the positive and negative terminals of the battery with the positive and negative terminals inside the battery box, and then install it into the battery box base.Cover the battery compartment cover tightly and lock the clips.

●Connect the connection cable of the battery box to the connection cable at the rear of the product and lock the nut.

Please do not insert the battery and the connecting cable forcibly, otherwise it will cause damage to the product.

If you have any questions, please call customer service.

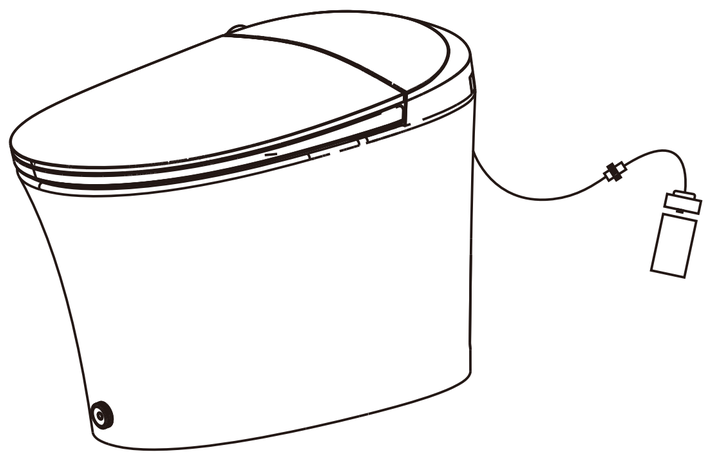

Attention:

Please confirm the positive and negative battery

Do not charge, disassemble, burn, mix with old batteries or different types of batteries, so as not to cause leakage or explosion. The battery box has a moisture-proof function, please ensure that the fixing screws are screwed in place so as to achieve a good sealing effect

Need to replace the battery recommended to contact professionals to replace.

■ User-friendly Design

● Slow-closing lid/seat

Preserve your toilet's life and allows you to close the lid/seat silently.

●Damper

The product has installed the damper which provide the toilet cover and toilet seat with a buffer function, to achieve the mute effect.

●8 Layers of safety

8 different built-in safety features to protect the user and product.

●Memory mode

After power failure, water temp, water pressure, seat temp, and wand position are all restored to mid-range after power failure. Night light is turned on by default after power failure.

On / off, keep the last memorized setting state.

● Pre-flushing

After seating, the product will flush once towards the seat to ensure that the seat wall is moistened.

NOTE: Drawings may not exactly define contour of the product.

9. Specifications

(1) Product specifications

Power rating		110V~120V
Frequency		60Hz
Rated power input		1050W(When inlet water temp in 15℃)
Seat and dryer temperature range		39.4 °F~104 °F
Source water temperature range		39.4 °F~95 °F
Water supply type		DN15(G1/2")
Water Inlet	Minimum pressure	35psi , ensuring a flow of water at least 20L/min
	Maximum pressure	80psi (still)
Toilet	Flush type	Tornado flush
	Rough-in	Rough-in 12in
Flushing	Way for heating	Transient heating
	Temp pf warm water	Off/about 93.2°F ~102.2°F(4 levels)
	Safety devices	Thermostat series, thermal fuse, flow detection device
Warm wind	Warm wind temp	Off/about 95 °F ~131°F (4 levels)
	Wind speed	Above 4m/s (3 levels regulations)
	Safety devices	Bimetal thermostat series, thermal fuse
Seat ring	Seat ring temp	Off/about 93.2 °F~104°F (4 levels)
	Safety devices	Thermal fuse
Remote control	Dimension	7.48in(L) * 2.01in(W) * 0.87in(H)
	Battery	Two AAA Batteries(Purchase required)
Power cable length		Appx. 59in
Product dimension		27.17in*16.54in*19.00in

NOTE: Drawings may not exactly define contour of the product.

(2) Function Table

Category	Function	
Cleansing	Posterior (Rear cleaning)	●
	Feminine (Front cleaning)	●
	Instant heating	●
	Oscillating cleaning	●
	Hot & cold massage cleaning	●
	Water pressure adjustment	●
	Water temperature adjustment	●
	Nozzle position adjustment	●
	Self-cleaning nozzle	●
	Antibacterial nozzle & seat cover	●
	Instant heating	●
Comfort	Seat heating	●
	Seat ring temperature adjustment	●
	Warm wind drying	●
	Warm wind temperature adjustment	●
	Air-cleaning filter system	●
	Soft close seat cover	●
	Electrostatic induction	●
Human care	Night Light	●
	Foot touch control flush	●
	Remote control	●
	Automatic flush	●
	Flush with power failure	●
	Remote control flush	●
	Flushing water pressure	●
	Washing in advance	●
Safety	Air isolation channel backflow prevention	●
	Business mode	●
	Nano glaze	●
	Eight-fold protection	●
	Self diagnosis	●
	Prevent low temperature scald	●

NOTE: Drawings may not exactly define contour of the product.

(3) Regular maintenance

Regular maintenance is required to ensure normal use

Note

- Cut off the power and water supply before maintenance.
- Direct water wash to the entire product is prohibited.

⚠ WARNING

Do not spray water or detergents on the toilet, remote control orthe power cord. Doing so may cause electrick shock or fire.



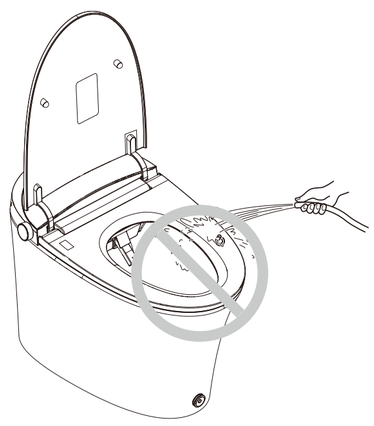

■ Maintenance during Winter Season During winter season, the water inside may freeze after long periods of storage and non-usage. Please take measures to prevent.

Note

- Before connecting the product to the water supply and electrical outlet, allow it to defrost for 30 mins in a warm indoor environment.
- In cases of extreme cold/freezing/nozzle stuck in place, wrap the water input line with a warm towel. Never pour hot water or use a hot dryer directly on the toilet.

Maintenance of product surface and ceramics

- Wipe dust or stains with a soft wet cloth
- A wet soft brush, cloth or sponge may be used to clean the ceramic area
  Do not use abrasive cleaning solutions, such as alcohol, bleach, paint thinner, cresol, benzene, gasoline, etc.

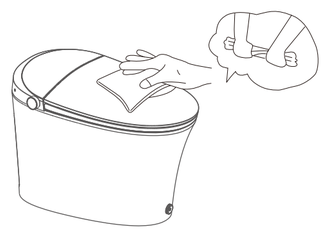

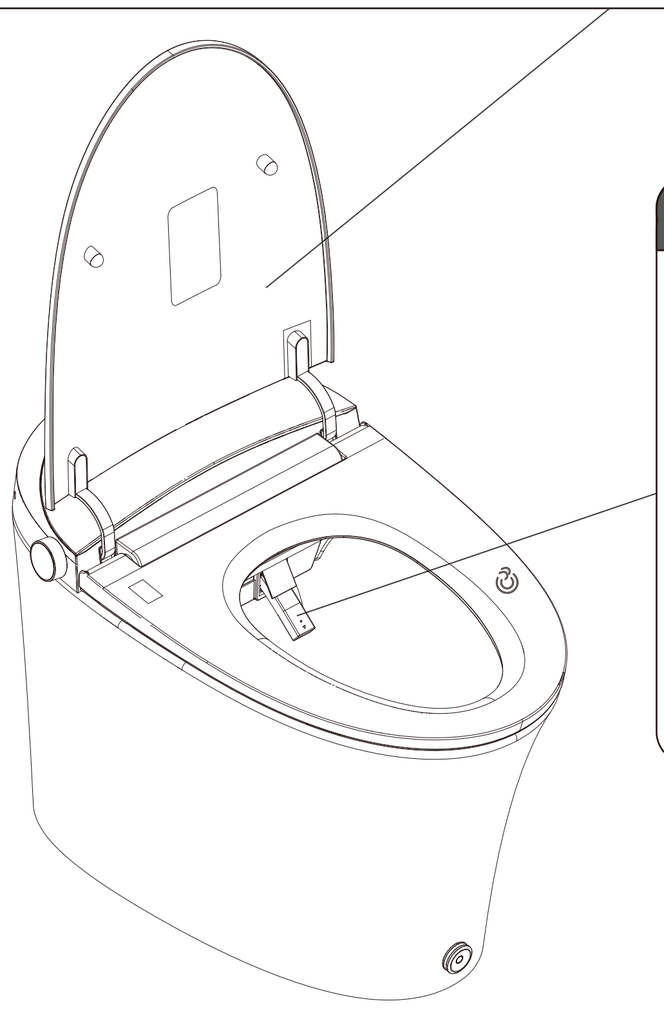

Maintenance of the nozzle

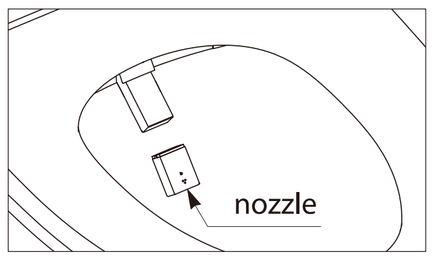

Powered on and not seated: Press the "Nozzle Clean" button on the remote controller, and the washer will automatic-ally extend.If there is dirt in the nozzle orifice, If there is dirt in the nozzle orifice, you can gently hold the washer with one hand and clean it with a toothbrush with the other hand.

Do not use excessive force, otherwise it will damage the nozzle.
When the nozzle is clogged, it is recommendedto replace it with a new one.

NOTE: Drawings may not exactly define contour of the product.

(4) Problems & Solutions

Power button

Problems	Fault Diagnoses	Solutions
Not working	Check whether the attaching plug is loose or not	Please check the circuit
	Check whether the power is switching on or off (the power light is not on)	Press rotated switch for 3s, the power light is on.
	Check whether there is any electric leakage or not (the light of leakage protection plug is not on)	Unplug the attaching plug from the socket, plug it again later. Press the reset switch of the leakage protection plug, if it is still not working, please unplug the attaching plug and contact with local distributor to repair.

Wash functions

Problems	Fault Diagnoses	Solutions
No water from the spout	Check whether or not the water supply cuts off	Wait for the water supply restoring
	Check whether or not the angle valve switches off	Open the angle valve
	Check whether or not the Tee valve is blocked	Clean the filter mesh
	Check whether or not the inlet pipe is flexed	The inlet pipe must be straight
The intensity of cleaning is not strong enough	Check whether or not the water pressure of cleaning switch to low level or not	Regulate the water pressure according to the instruction manual
	Check whether or not the inlet filter is blocked	Clean the filter mesh or change the water filter
Unusual water flow from the spout	Abnormal operation	Unplug the attaching plug for one minute and then plug it again
The water temp is not warm enough	Check whether or not the water supply switches to low level	Regulate the water temp according to the instruction manual
The cleansing is always leaking	Solenoid valve no longer has any effect	Please contact with our qualified maintenance personnel for repairing
The cleaning function is not working normally	The human induction system of the toilet seat no longer has any effect	Please contact with our qualified maintenance personnel for repairing

NOTE: Drawings may not exactly define contour of the product.

Dryer

Problems	Fault Diagnoses	Solutions
The dryer blows cold air	Check whether or not the dryer switches off	Regulate the temperature of dryer according to the instruction manual
	Check whether or not the heating element of dryer is damaged	Please contact with our qualified maintenance personnel for repairing

Heated seat

Problems	Fault Diagnoses	Solutions
The seat temp is too low or is not hot	Check whether or nor the temp of toilet seat is on the "off" position	Regulate the temperature of toilet seat according to the instruction manual

Remote Control

Problems	Fault Diagnoses	Solutions
The blue light of water temp is flickered	Low battery	Please replace a new battery
Remote control is not working	Check whether or not there is any water on the remote control	Wipe off water by dry towel

Toilet Unit

Problems	Fault Diagnoses	Solutions
The product is not flushed clean	No power supply	Power restoration
	No water from the spout	Please contact with our qualified maintenance personnel for repairing
	No water but have the sound of flushing	1. Check whether or not the pipeline is blended or not, please keep the water supply pipeline open and smooth 2. Check there is any damage of water pump
	have water all the time	Please contact with our qualified maintenance personnel for repair if there is any unusual from the water inlet valve.

Soft-Closing Feature

Problems	Fault Diagnoses	Solutions
The function of flipping the seat cover/ring up by foot touch cannot open or close	Auto-damping is damaged	1. Recharge after unplug the attaching plug 2. Please contact with our qualified personnel if the following solution is not working.

NOTE: Drawings may not exactly define contour of the product.

DeerValley®

ONE YEAR LIMITED WARRANTY

Phone: (+1) 312-626-9466
Address: 2645 Maricopa St Torrance, CA 90503
Email: service@deervalleybath.com
Web: www.deervalleybath.com

LIMITED WARRANTY COVERAGE

1 YEAR LIMITED WARRANTY

DeerValley products are made with quality materials and excellent craftsmanship to provide the customers a long-lasting product. In the case of any defects in materials or craftsmanship under regular use were inspected in the first one year of delivery, DeerValley will provide replacement parts at no charge, or at its option, replace any product or part of the product that is deemed defective, under normal installation, use, service and maintenance. This warranty applies only to the original purchaser. Proof of purchase will be required in the case of a claim. SCRATCHES ARE NOT COVERED UNDER WARRANTY.

The manufacturer warrants this product to be free of manufacture defects during the above mentioned warranty time. Please keep a copy of the original invoice as proof of purchase.

DeerValley will, as its option, (1) repair or replace the defective part(s) or product(s) at no charge; (2) issue a refund of the original purchase price of the product(s) (Valid within 30 days from the date of delivery); or (3) issue a credit to be applied toward the purchase of a new DeerValley product shipping/delivery charges may apply and are in DeerValley sole discretion.

DeerValley recommends the installations to be made by a licensed, professional plumber. DeerValley will not be held responsible for any damage or product failure due to improper installation, misuse, or failure to use a licensed professional. DeerValley is not responsible for any removal or installation cost.

This limited warranty shall not apply to goods which have been subject to accident, negligence, improper installation, product abuse, product misuse, or use of cleaners containing abrasives, alcohol or other organic solvents, whether performed by a contractor, service company, or yourself, are excluded from this warranty.

DeerValley responsibility under this limited warranty is limited to only to replacement parts and no other costs. DeerValley will not be responsible for labor charges and/or damage incurred by installation, repair or replacement, nor for any indirect incidental or consequential damages, losses, injury or costs of any nature relating to this product Except as provided by law, this limited warranty is in lieu of and excludes all other warranties, conditions, and guarantees, whether expressed or implied, statutory or otherwise, including without restriction those merchantability of fitness for use.

RESPONSIBILITIES OF OTHERS

Inspecting the unit prior to installation is the responsibility of the installer or building contractor who acts on behalf of the user. They are responsible for ensuring the unit is free of defect or damage.

Notices are placed on and in the unit and on the shipping carton advising the installer of this responsibility.

In the event of a problem, the unit must not be installed. DeerValley is not responsible for failures or damage that could have been discovered, repaired, or avoided by proper inspection and testing prior to installation.

Damage occurring in transit is the responsibility of the carrier. The user or installer MUST open the crate and inspect the unit for damage when it is delivered. If damage is discovered, it must be reported immediately to the seller and the carrier in writing, and an inspection requested. Failure of the carrier to respond should be reported to the seller and the carrier. Your freight claims should be filed promptly thereafter.

LIMITATIONS AND EXCLUSIONS

This warranty does not cover instances of negligence, misuse, abuse, improper installation, carelessness, accident, hard water or mineral deposits, exposure to corrosive materials, misapplication, damages caused by improper maintenance, alteration of the product, or failure to follow care or installation instructions enclosed with your product. This warranty is void if the DeerValley is subject to alteration, or if repairs are attempted by anyone other than an authorized agent of DeerValley. This warranty does not extend to plumbing or components installed by dealers, installers or by any party other DeerValley.

DeerValley will not be liable for loss of use of the DeerValley inconvenience, or any other incidental or consequential costs, expense or damages. Please note that some states do not allow the exclusion or limitation of incidental damages.

DISCLAIMER

Except as expressly provided, there shall be no warranty or obligation, express or implied, oral or statutory. No dealer or other person has the authority to make any warranties or representations concerning DeerValley or its products. In no event shall DeerValley be held responsible for any such warranties or representations.

WARRANTY SERVICE

NOTE: When requesting warranty, be sure to have the following:

- Copy of original invoice
- Date of installation
- Description and pictures of defect
- Model number or description of model

To obtain warranty service and replacement part, please contact DeerValley Customer Service. DeerValley will determine whether to repair or replace your product, issue a refund, or issue a credit.