Fittes

Dimension Database

Framed Wall Vent (Lite)

Component Dimensions

If unsure of vent sizing, please refer to our **Sizing Tool:** https://fittes.ca/#quiz-YDHqRw

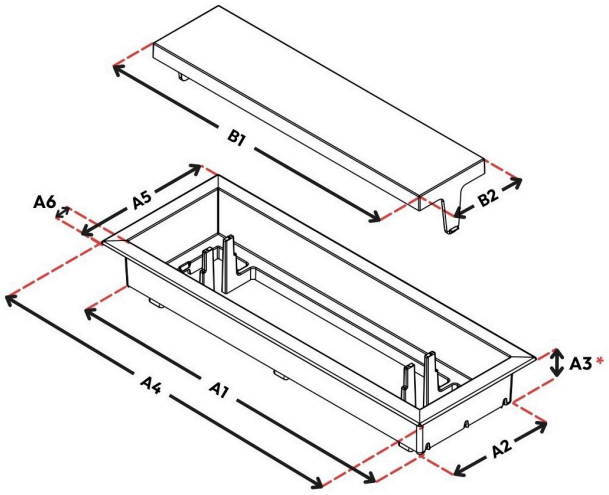

Assembled View:

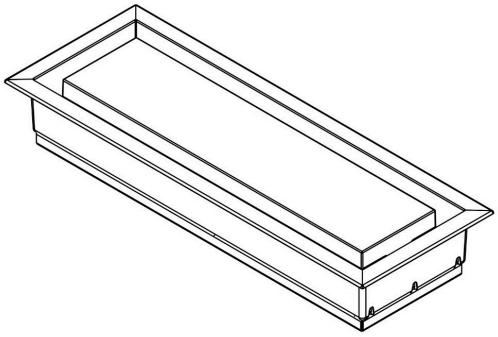

Imperial (in)

	4x10"	4x12"	6x10"	6x12"	6x14"
A1	9 13/16	11 13/16	9 13/16	11 13/16	13 13/16
A2	3 51/64	3 51/64	5 51/64	5 51/64	5 51/64
A3 *	1 53/64	1 53/64	1 53/64	1 53/64	1 53/64
A4	10 37/64	12 45/64	10 45/64	12 45/64	14 45/64
A5	4 9/16	4 11/16	6 11/16	6 11/16	6 11/16
A6	31/64	17/32	17/32	17/32	17/32
B1	8 5/8	10 5/8	8 19/32	10 23/64	12 23/64
B2	2 5/8	2 5/8	4 5/8	4 23/64	4 23/64

	8x8"	8x14"	10x10"	10x14"	12x12"
A1	7 51/64	14 1/4	9 51/64	14 1/4	11 51/64
A2	7 51/64	8	9 51/64	10 5/64	11 51/64
A3 *	1 53/64	1 53/64	1 53/64	1 43/64	1 31/32
A4	8 11/16	15 1/8	10 11/16	15 1/64	12 11/16
A5	8 11/16	8 7/8	10 11/16	10 49/64	12 11/16
A6	17/32	17/32	35/64	31/64	35/64
B1	6 23/64	12 51/64	8 23/64	12 15/64	10 19/64
B2	6 25/64	6 35/64	8 23/64	7 63/64	10 19/64

* A3 measures the depth of the vent that will go into the wall.

Metric (mm)

	4x10"	4x12"	6x10"	6x12"	6x14"
A1	249.2	300.0	249.2	300.0	350.8
A2	96.4	96.4	147.2	147.2	147.2
A3 *	46.4	46.4	46.4	46.4	46.4
A4	268.7	322.7	271.9	322.7	373.5
A5	115.9	119.1	169.9	169.9	169.9
A6	12.3	13.5	13.5	13.5	13.5
B1	66.7	269.9	218.3	263.1	313.9
B2	219.1	66.7	117.5	110.7	110.7

	4x10"	4x12"	10x10"	10x14"	12x12"
A1	198.0	362.0	248.8	362.0	299.6
A2	198.0	203.2	248.8	256.0	299.6
A3 *	46.4	46.4	46.4	42.5	50.0
A4	220.7	384.2	271.5	381.4	322.3
A5	220.7	225.4	271.5	273.4	322.3
A6	13.5	13.5	13.9	12.3	13.9
B1	161.5	325.0	212.3	310.8	261.5
B2	162.3	166.3	212.3	202.8	261.5

Additional Notes

Components

Body (A): Can be dropped into wall. No mudding required. Please see installation guide for proper installation instructions

Tray (B): Can slide to remove to access dampers

Install Note

This unit can be retrofitted and installed after the finished surface.

Airflow Control

Dampers sold seperately. Check www.fittes.com for available sizes

Compatible Materials

Inner tray can be painted over or wallpapered to match wall

Patent information: http://www.fittes.com/pages/patents