ASSEMBLY INSTRUCTIONS

6-PIECE PATIO FURNITURE SETS

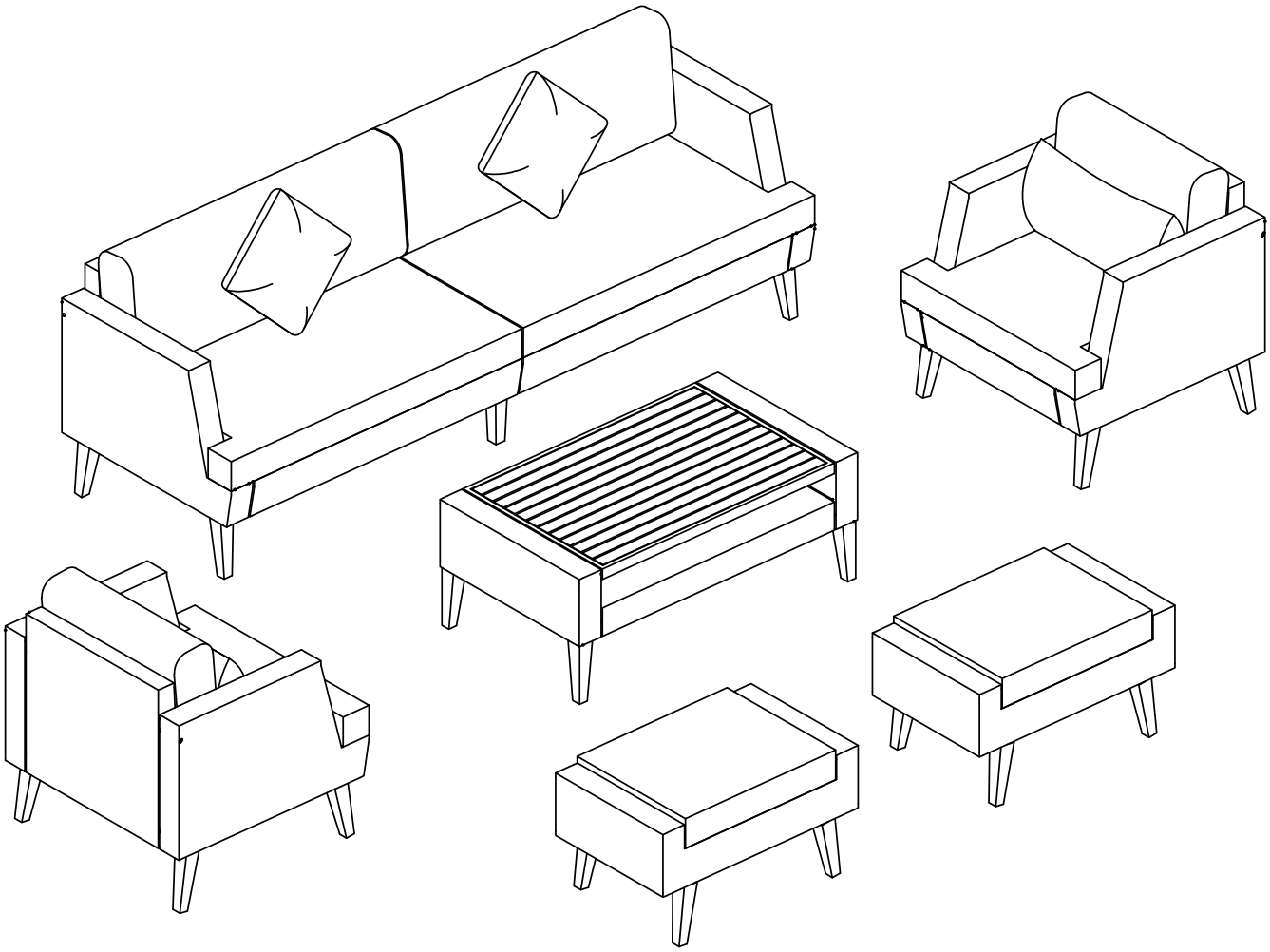

NOTE: 50% TIGHTEN BEFORE FIXING ALL BOLTS

N704P395801
N704P395802
N704P395803
N704P395804
N704P395805

(1 x Bench)

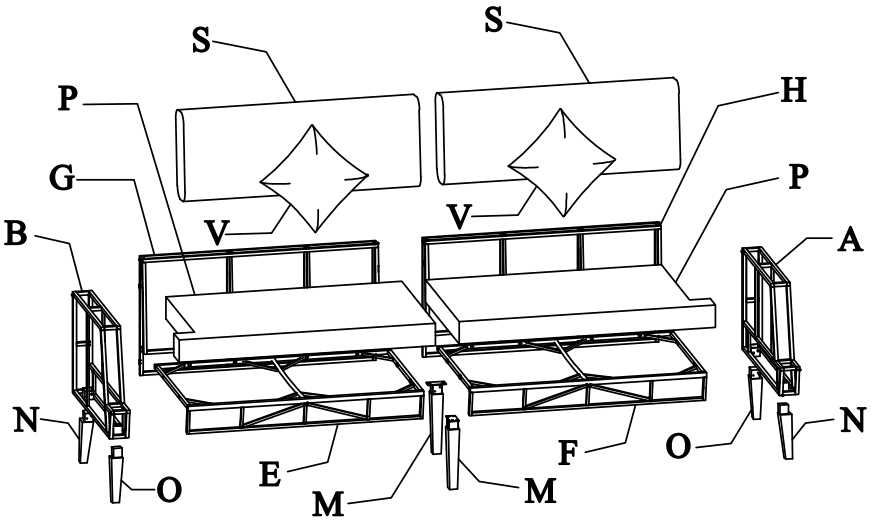

(2 x Ottoman)

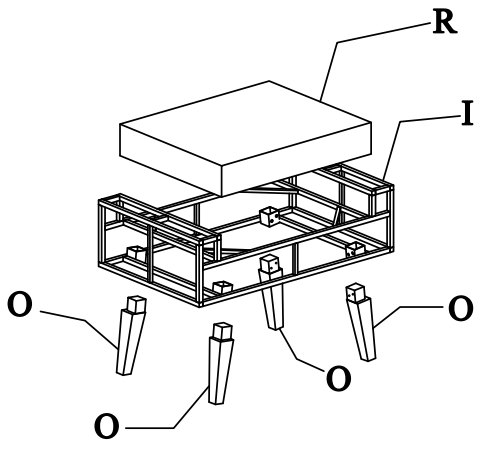

(2 x Single Chair)

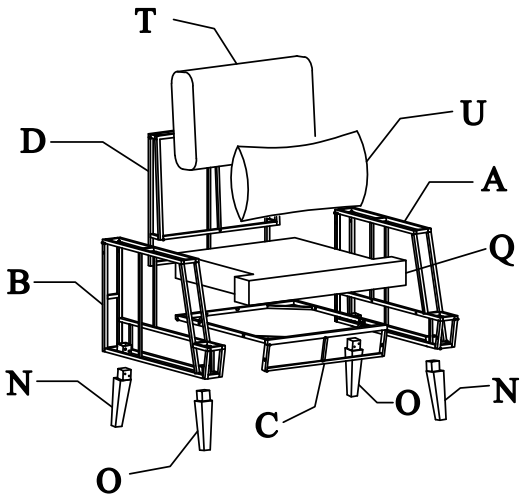

(1 x Table)

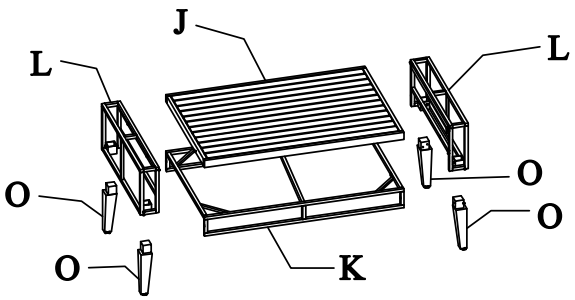

Notice:

1. 50% Tighten before fixing all screws, Allen wrench is recommended instead of an electric drill.
2. Place the item on a flat ground to adjust and make sure it remains stable
3. Tighten up all screws with tools gradually.
4. If the screws are not aligned with holes during assembly, please loosen all the other screws to 50% and continue the assembly process.
5. If the item is not stable, please loosen all the screws, adjust it on a flat ground and tighten up all screws again.
6. Note : If one or some screws are fully tightened during assembly, chances are the others will not be aligned with holes. In addition, all the holes are designed to be relatively larger to provide more space for the adjustment of the screws.

Part List

A 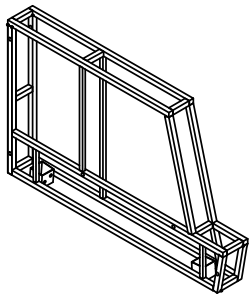 Right frame (3 pcs)	B 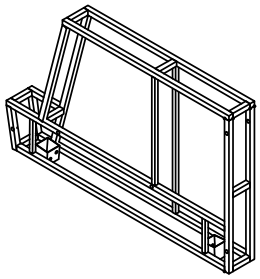 Left frame (3 pcs)	C 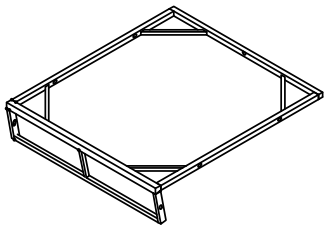 Seat frame (2 pcs)
D 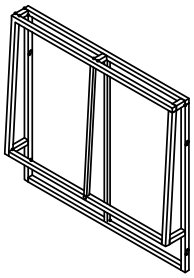 Back frame (2 pcs)	E 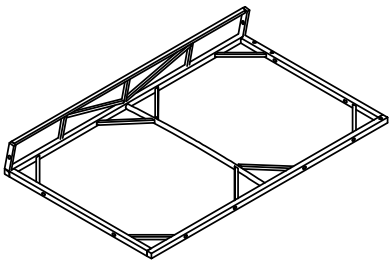 Seat left frame (1 pc)	F 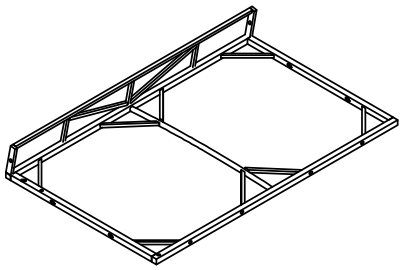 Seat right frame (1 pc)
G 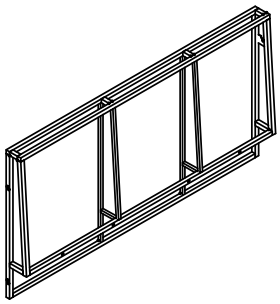 Back left frame (1 pc)	H 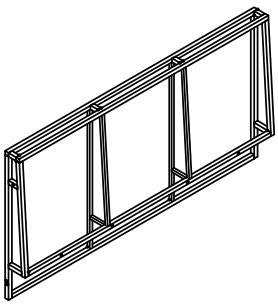 Back right frame (1 pc)	I 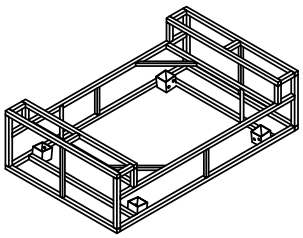 Ottoman frame (2 pcs)
J 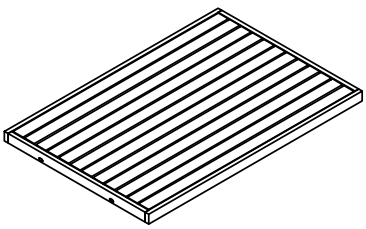 Table top frame (1 pc)	K 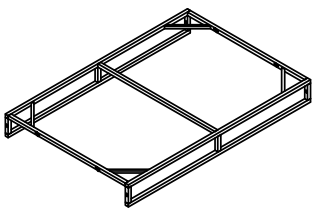 Table shelf frame (1 pc)	L 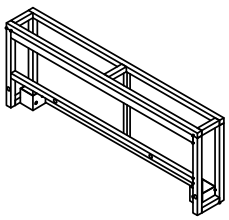 Table side frame (2 pcs)

Part List

M 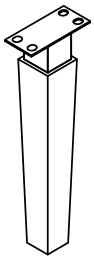 Chair leg middle (2 pcs)	N 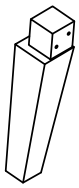 Chair leg left (6 pcs)	O Chair leg right (18 pcs)
P 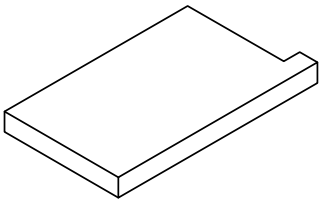 Bench cushion (2 pcs)	Q 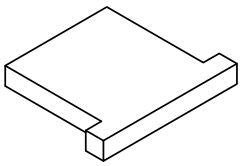 Seat cushion (2 pcs)	R 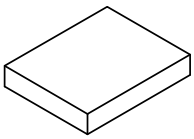 Ottoman cushion (2 pcs)
S 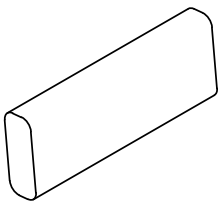 Bench back pillow (2 pcs)	T 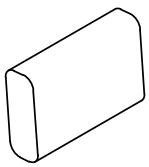 Single back pillow (2 pcs)	U 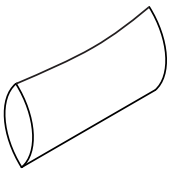 Small back pillow (2 pcs)
V 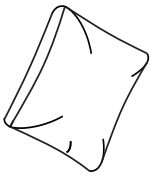 Decorative pillow (2 pcs)	W 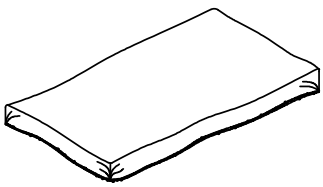 Cover cloth (1 pc)	

Hardware List

1 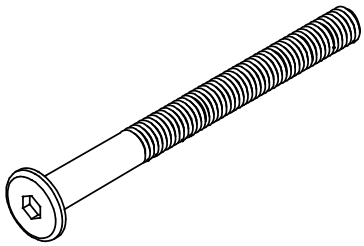 Bolt M6 x 110 mm 6 pcs + extra 1 pc	2 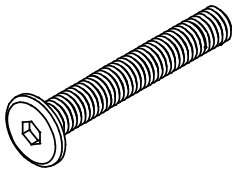 Bolt M6 x 60 mm 4 pcs + extra 1 pc	3 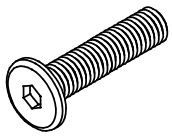 Bolt M6 x 40 mm 16 pcs + extra 2 pcs
4 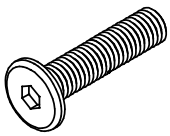 Bolt M6 x 35 mm 26 pcs + extra 2 pcs	5 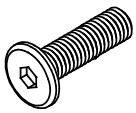 Bolt M6 x 25 mm 4 pcs + extra 1 pc	6 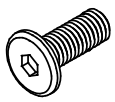 Bolt M6 x 15 mm 8 pcs + extra 1 pc
7 M6 x 1 mm Washers 68 pcs + extra 3 pcs	8 Nut M6 4 pcs + extra 1 pc	9 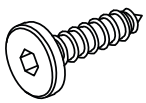 Screw M6 x 20 mm 48 pcs + extra 3 pcs
10 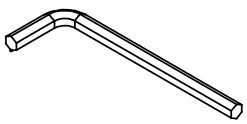 Allen key M4 (2 pcs)	11 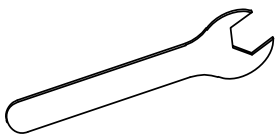 Spanner (1 pc)	

CARTON CONTENT:

N704P395801

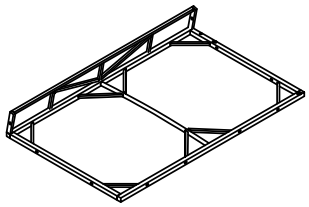

E x 1

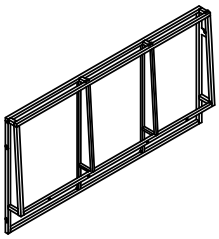

G x 1

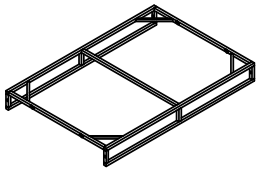

K x 1

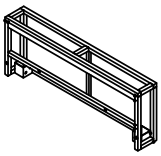

L x 2

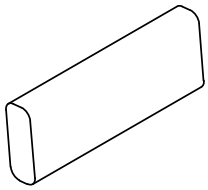

S x 2

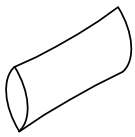

U x 1

N704P395802

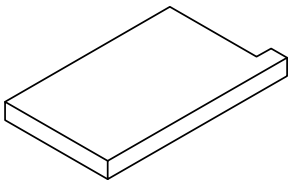

P x 2

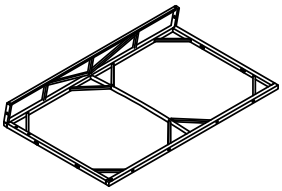

F x 1

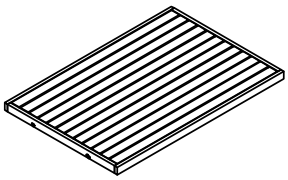

J x 1

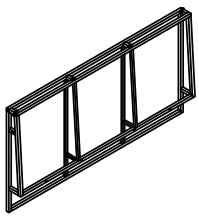

H x 1

N704P395803

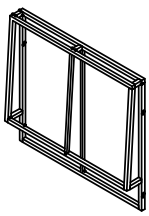

D x 2

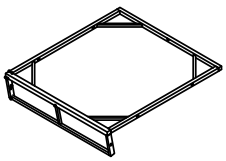

C x 2

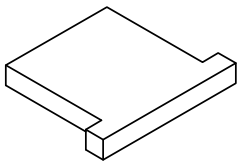

Q x 2

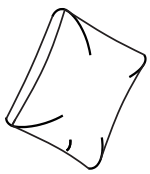

V x 2

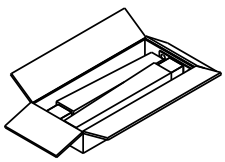

M x 1

(1 Box = M x 2pcs)

HARDWARE

CARTON CONTENT:

N704P395804

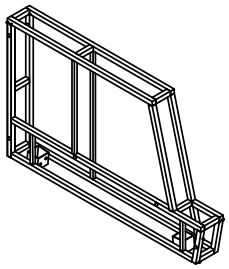

A x 3

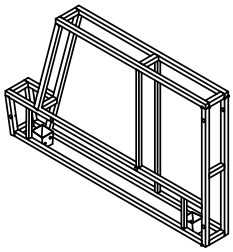

B x 3

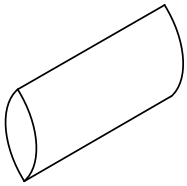

U x 1

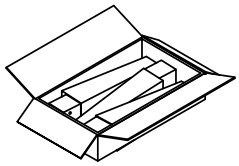

N x 1
(1 Box = N x 6pcs)

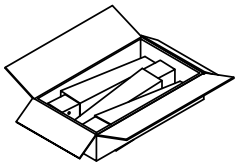

O x 1
(1 Box = O x 6pcs)

N704P395805

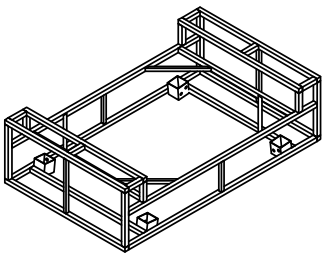

I x 2

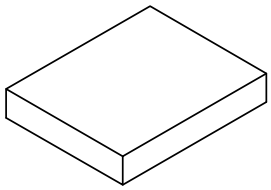

R x 2

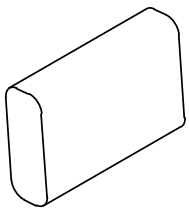

T x 2

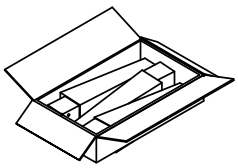

O x 2
(2 Box = O x 12pcs)

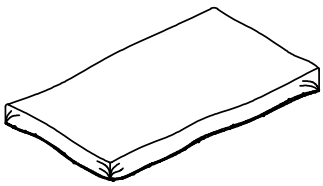

W x 1

STEP 1 (2 x Chair assembly)

Connect Right frame (A) & Chair leg left (N), Chair leg right (O) with Screw (9)

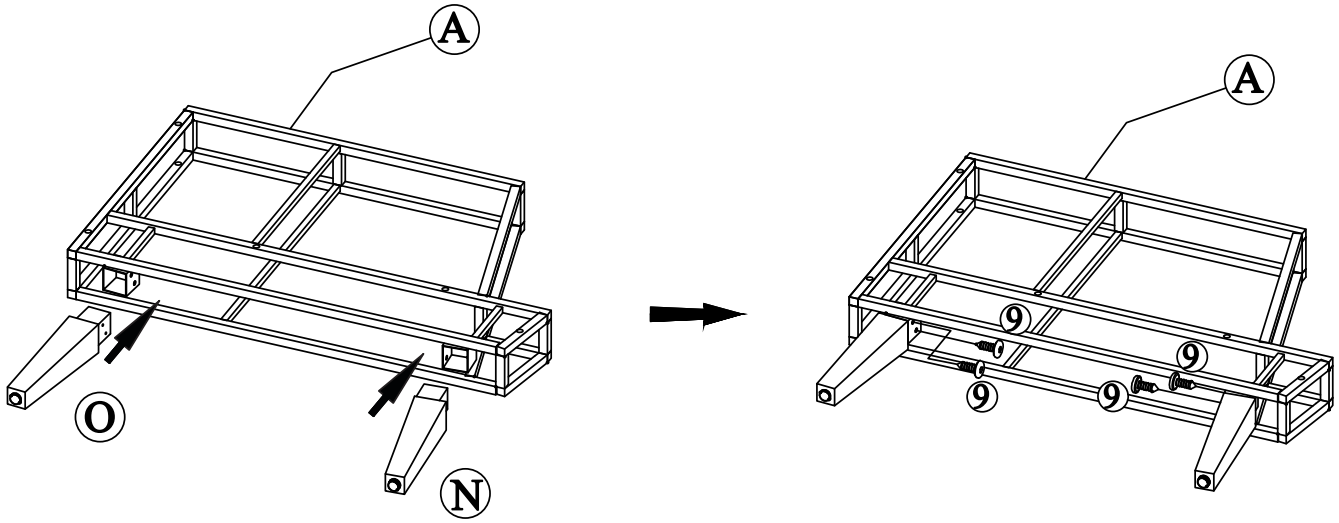

A*1	N*1	O*1	⑨*4

STEP 2

Connect Left frame (B) & Chair leg left (N), Chair leg right (O) with Screw (9)

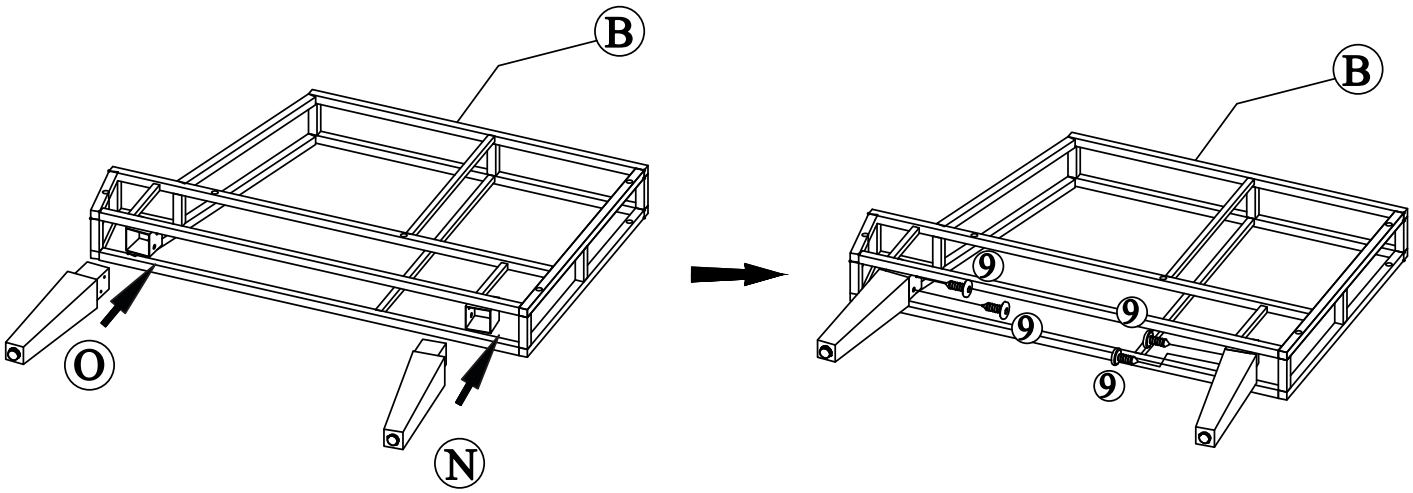

B*1	N*1	O*1	⑨*4

STEP 3

Connect Back frame (D) & Seat frame (C) with Bolt (4) & Washer (7)

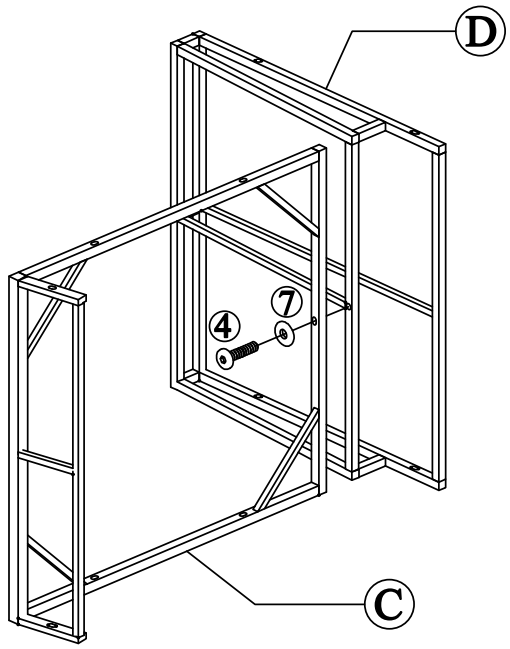

C*1 | D*1 | ④*1 | ⑦*1

STEP 4

Connect part from Step 3 & part from Step 1 with Bolt (4), (5) & Washer (7)

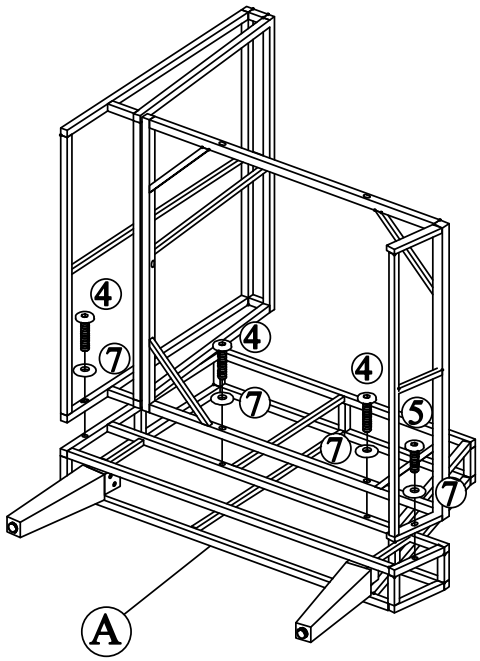

A*1 | ④*3 | ⑤*1 | ⑦*4

STEP 5

Connect part from Step 4 & part from Step 2 with Bolt (4), (5) & Washer (7)

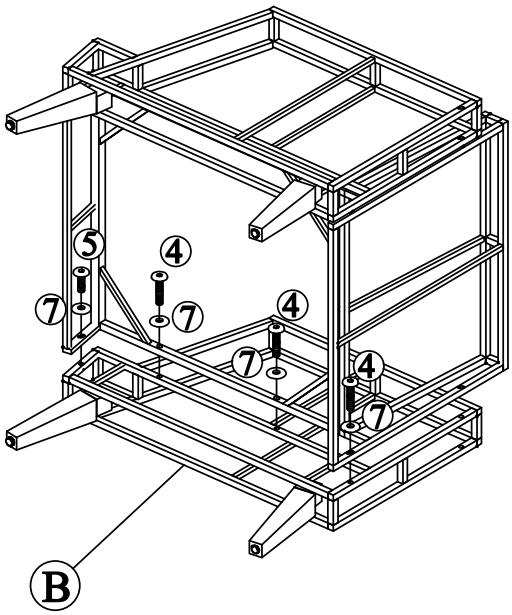

B*1 | ④*3 | ⑤*1 | ⑦*4

STEP 6

Connect part from Step 3 & part from Step 1, Step 2 with Bolt (1) & Washer (7)

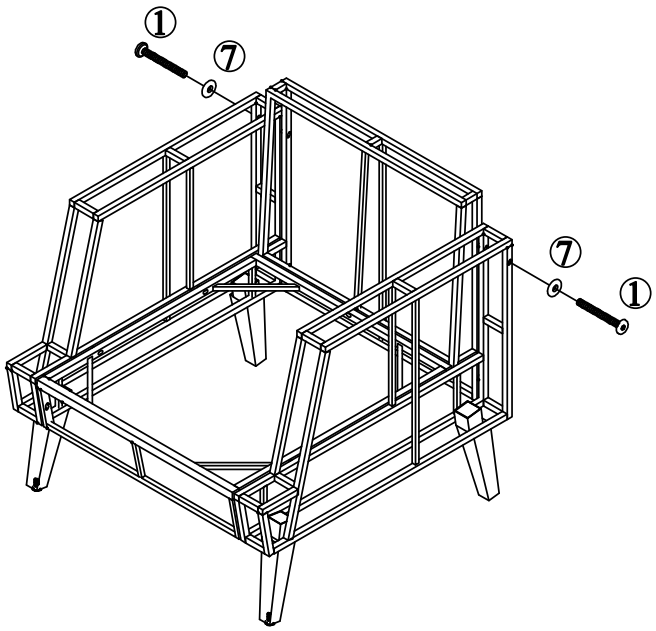

①*2 | ⑦*2

STEP 7

Put on Seat cushion (Q), Single back pillow (T) & Small back pillow (U) to complete Single chair

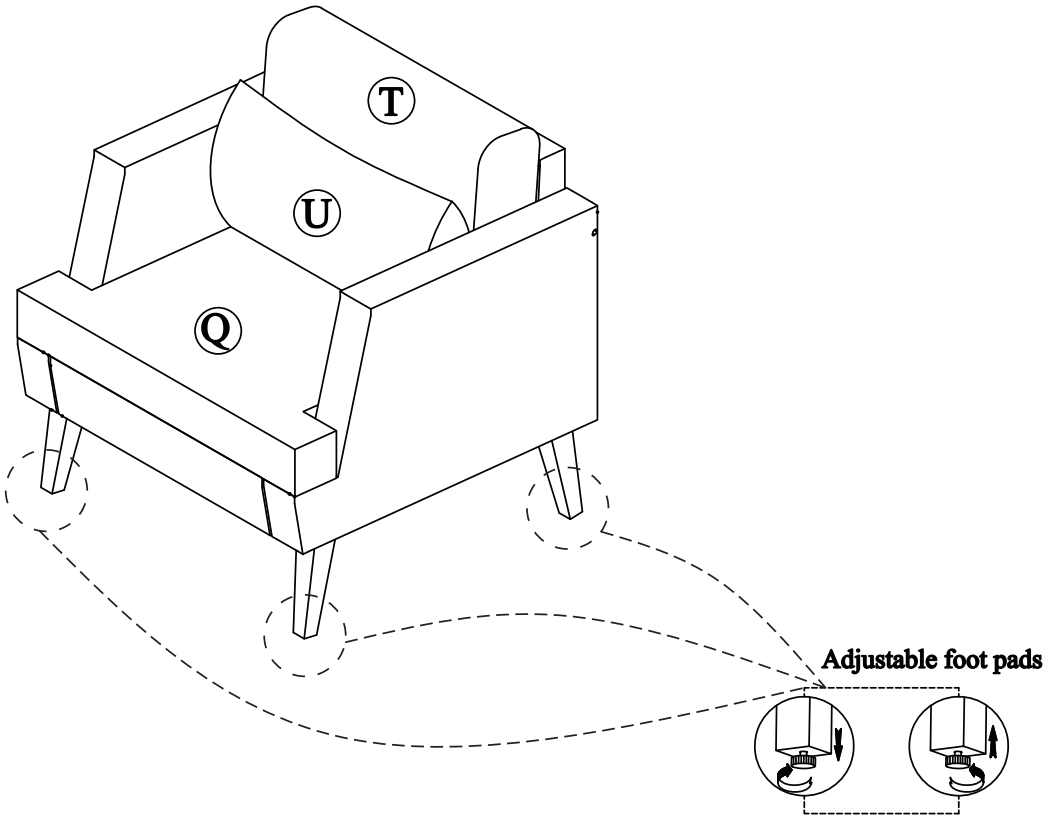

Q*1	T*1	U*1

STEP 8 (1 x Bench assembly)

Connect Seat left frame (E) & Seat right frame (F) with Bolt (2), Nut (8) & Washer (7)

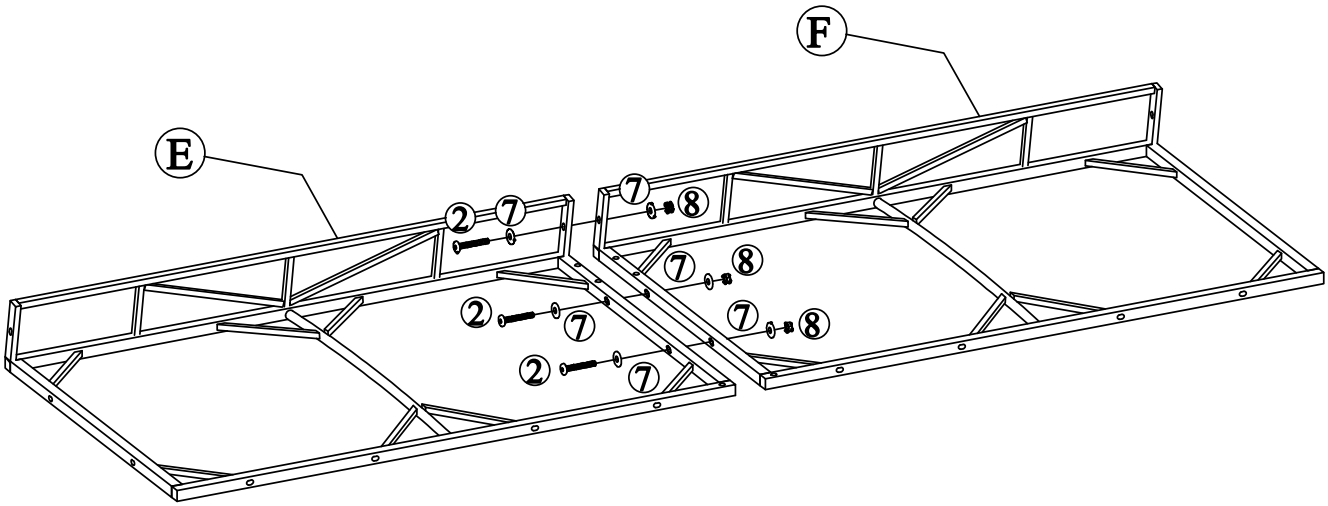

E*1	F*1	②*3	⑦*6	⑧*3

STEP 9

Connect Back left frame (G) & Back right frame (H)
with Bolt (2), Nut (8) & Washer (7)

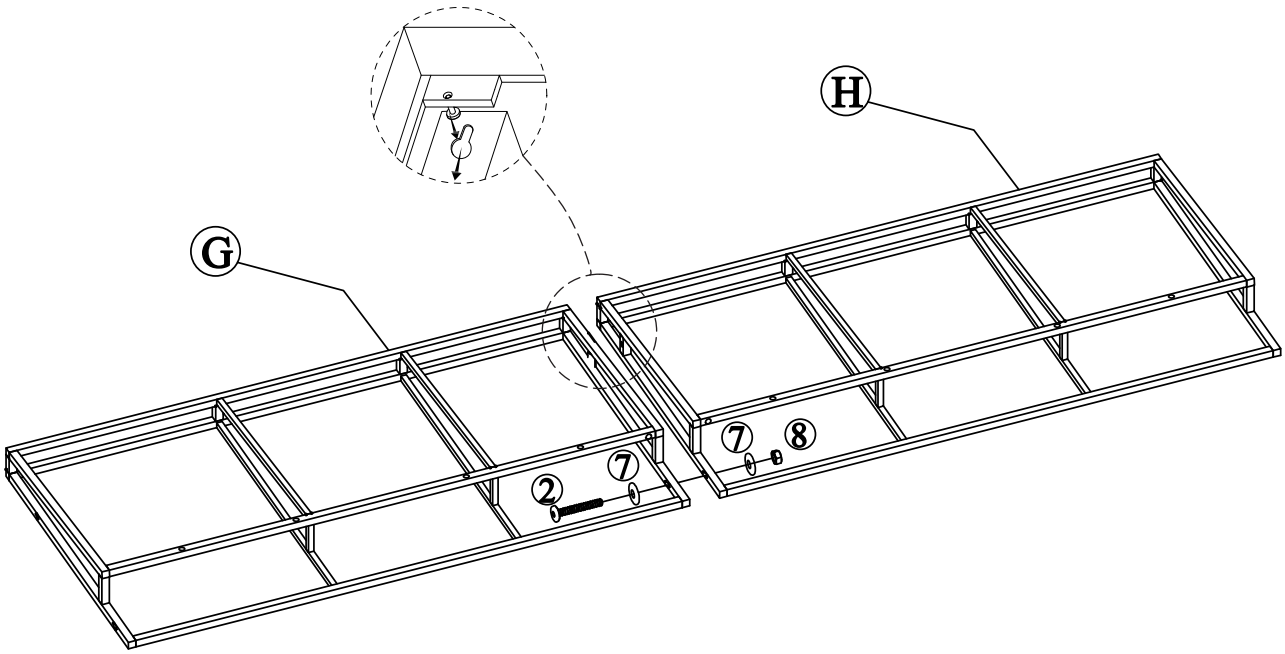

G*1	H*1	②*1	⑦*2	⑧*1

STEP 10

Connect part from Step 8 & part from Step 9
with Bolt (3) & Washer (7)

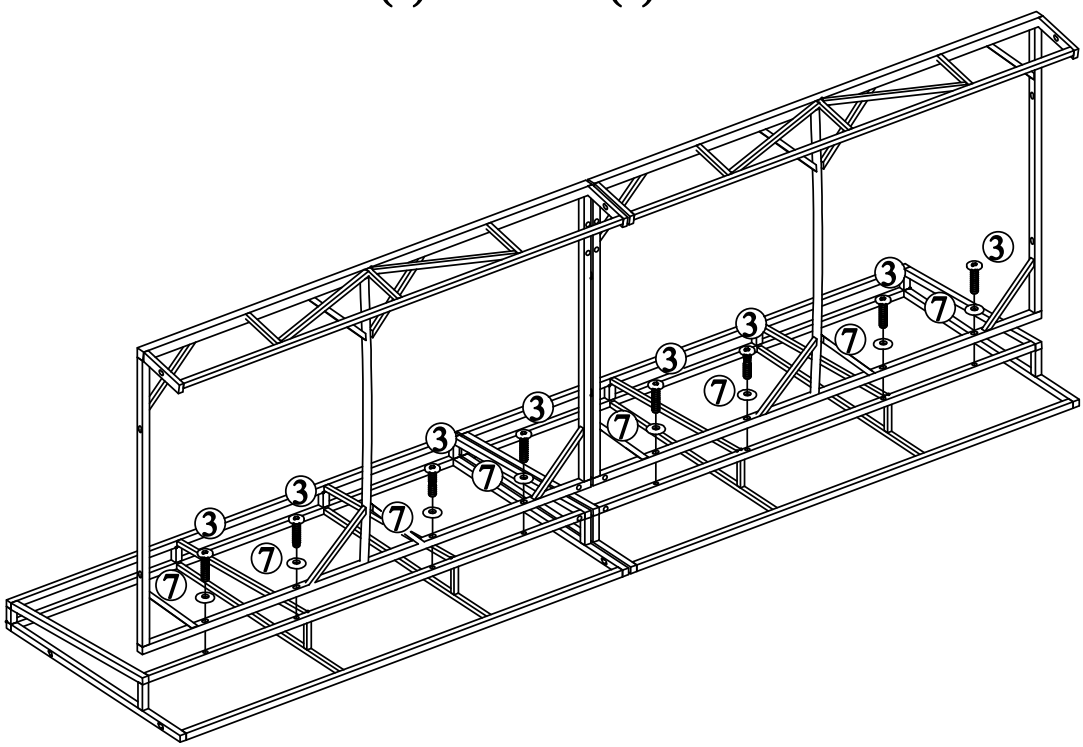

③*8	⑦*8

STEP 11

Connect part from Step 10 & part from Step 1 with Bolt (3) & Washer (7)

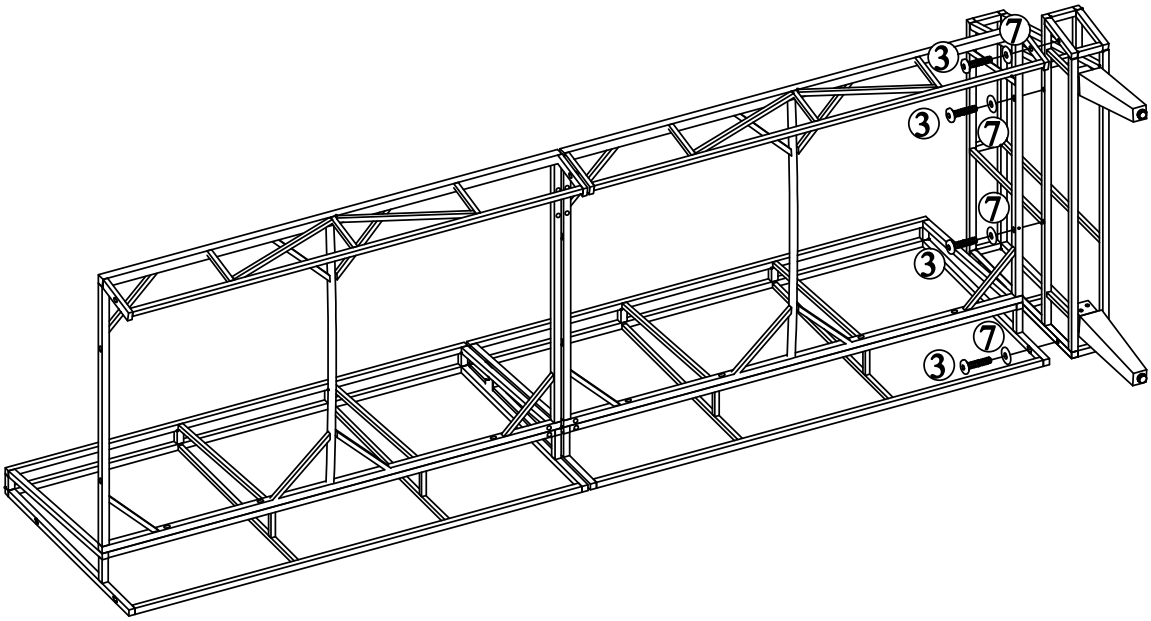

③*4	⑦*4

STEP 12

Connect part from Step 11 & part from Step 2 with Bolt (3) & Washer (7)

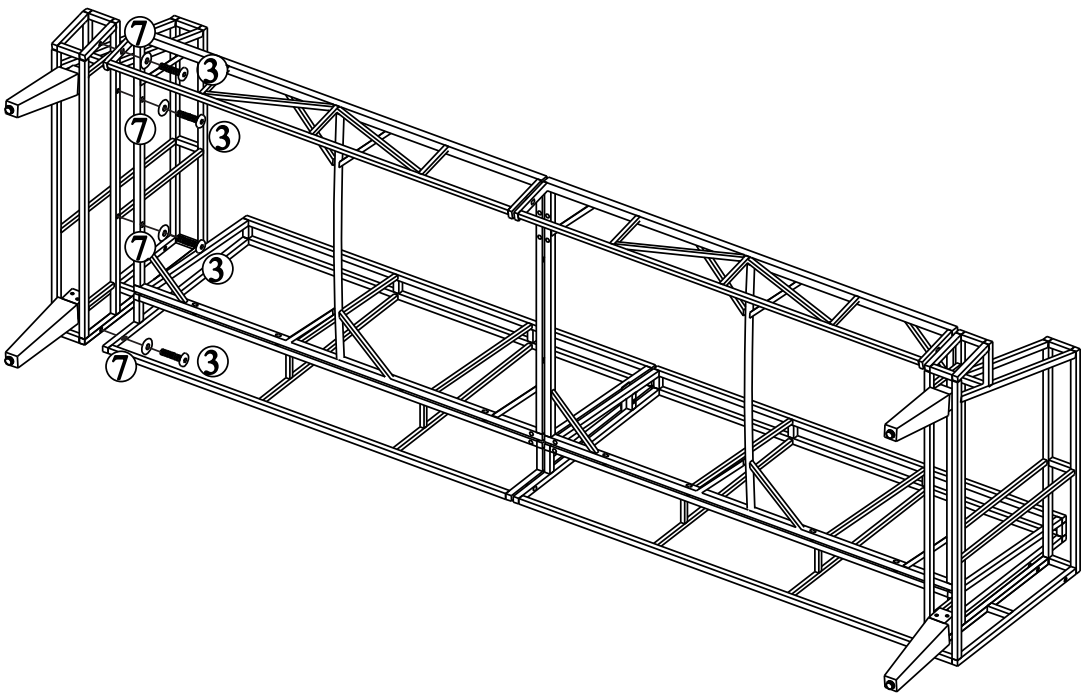

③*4	⑦*4

STEP 13

Connect part from Step 12 & Chair leg middle (M) with Bolt (6) & Washer (7)

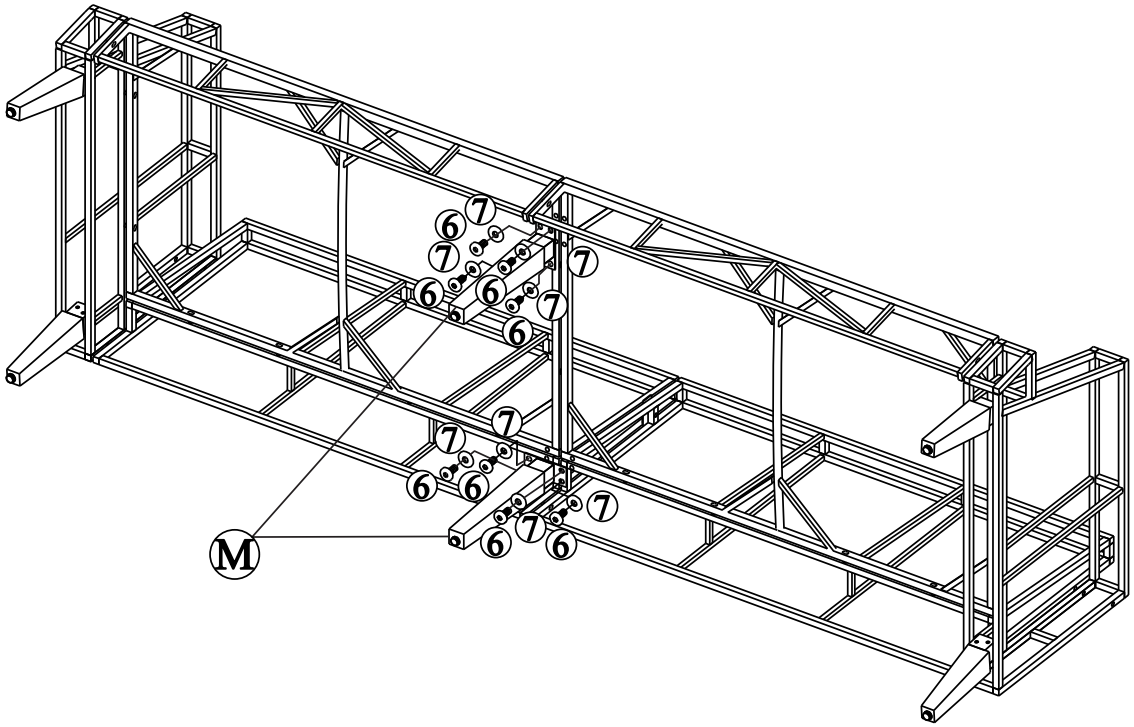

M*2	⑥*8	⑦*8

STEP 14

Connect part from Step 10 & part from Step 1, Step 2 with Bolt (1) & Washer (7)

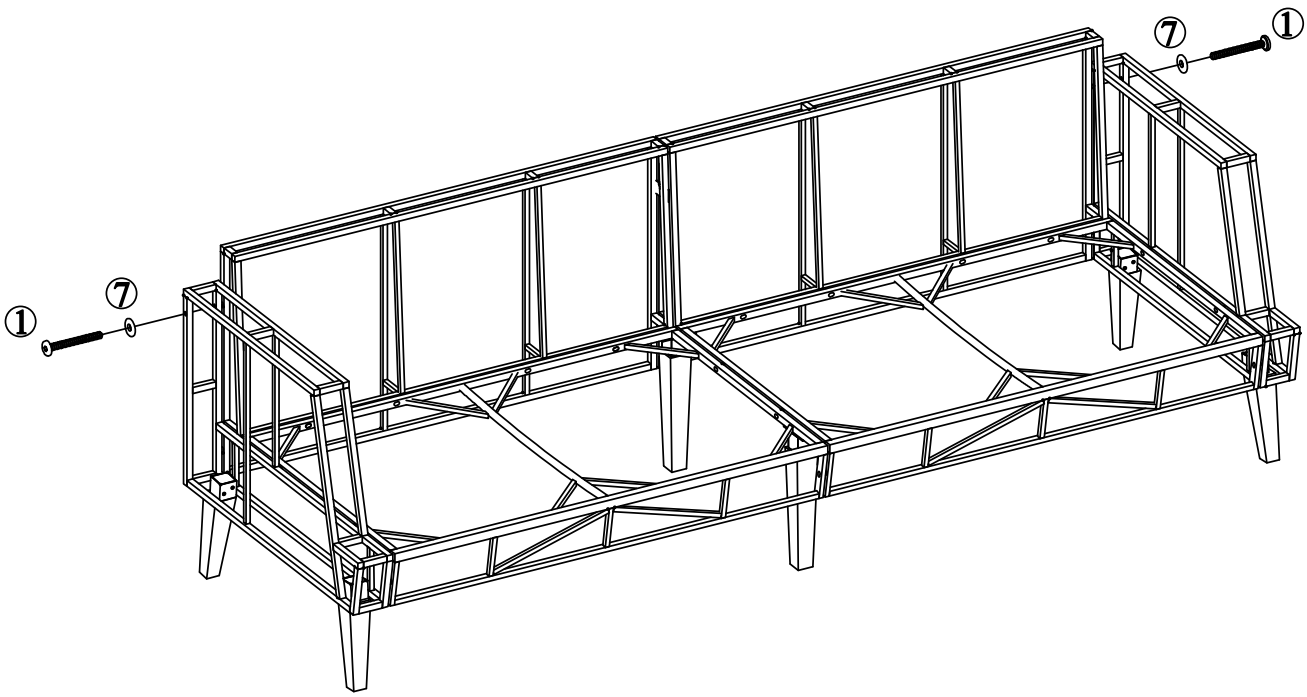

①*2	⑦*2

STEP 15

Put on Bench cushion (P), Bench back pillow (S) & Decorative pillow (V) to complete Bench

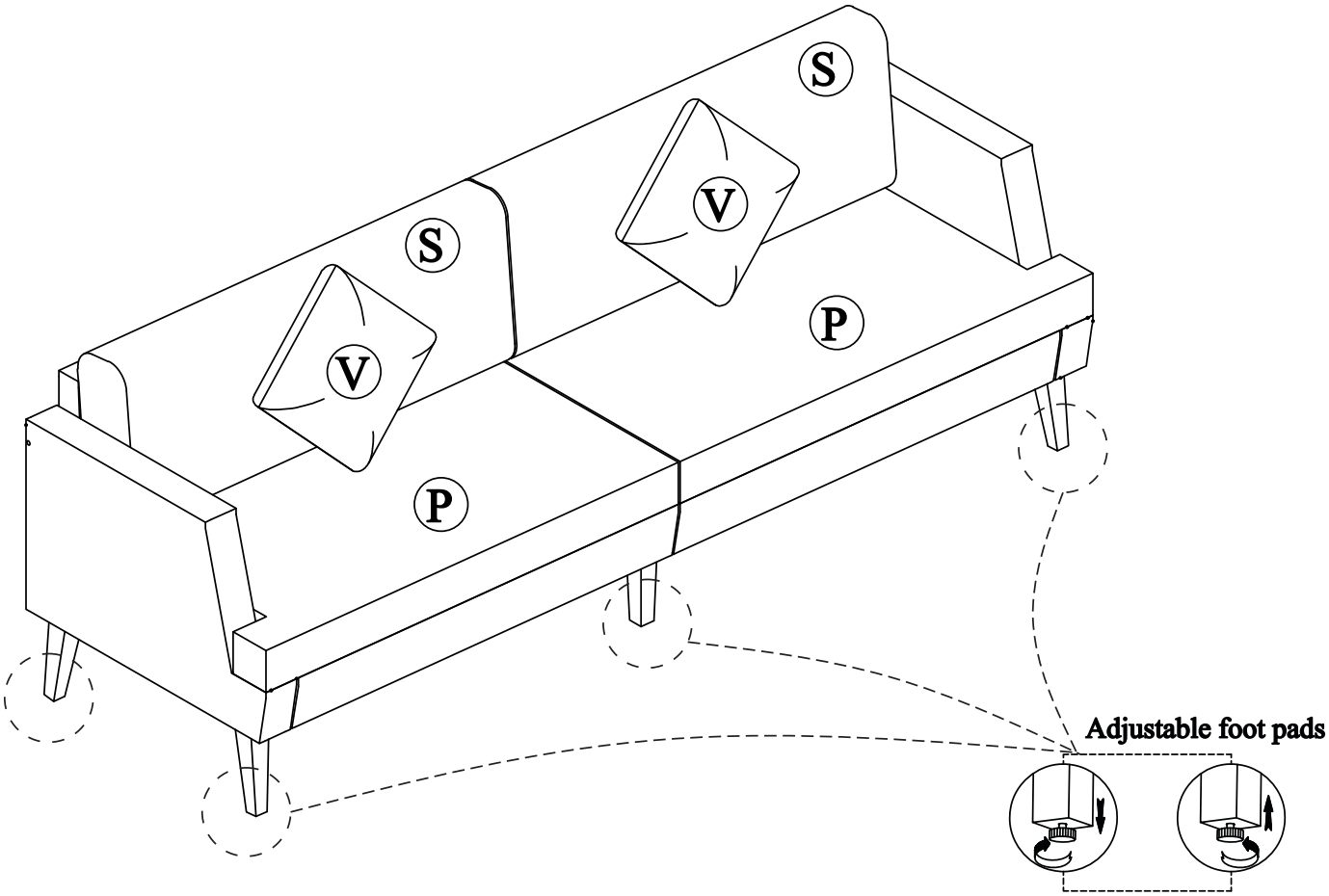

P*2	S*2	V*2

STEP 16 (2 x Ottoman assembly)

Connect Ottoman frame (I) & Chair leg right (O) with Screw (9)

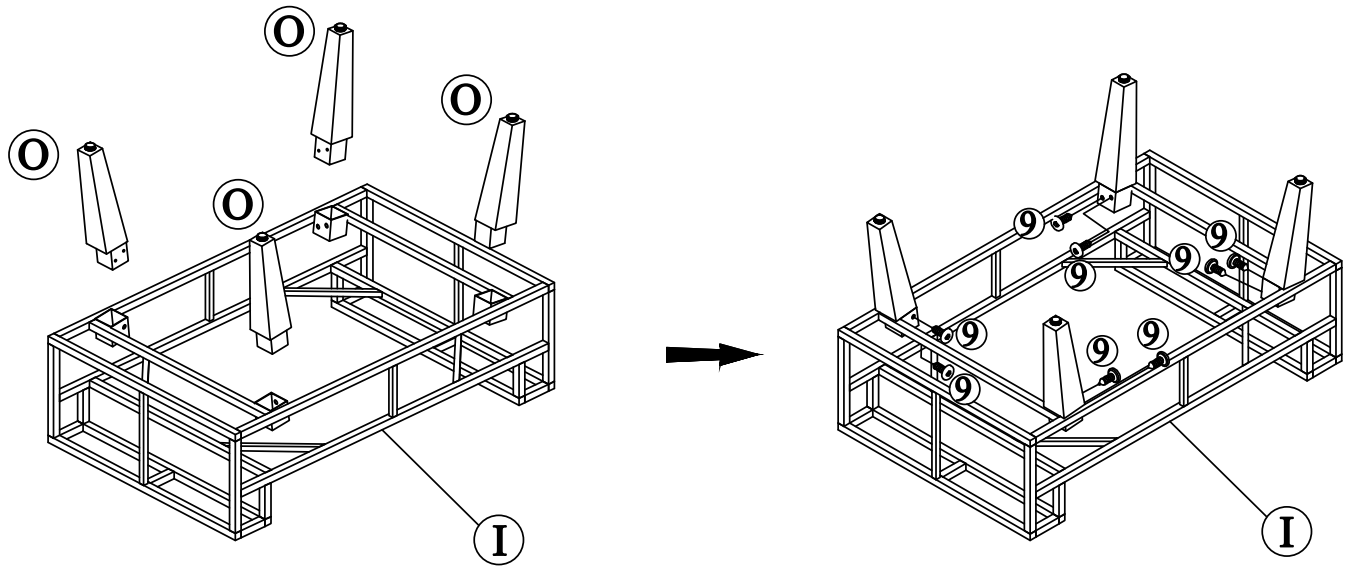

I*1	O*4	⑨*8

STEP 17

Put on Ottoman cushion (R) to complete Ottoman

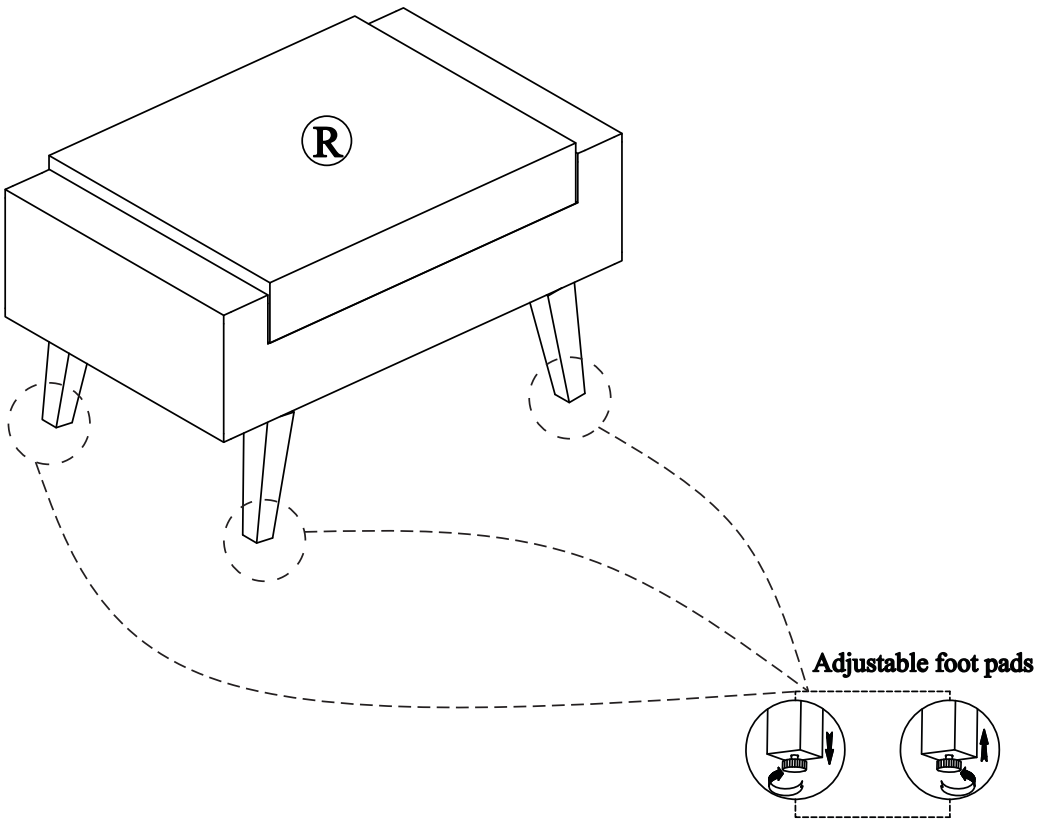

R*1

STEP 18 (1 x Table assembly)

Connect Table side frame (L) & Chair leg right (O) with Screw (9)

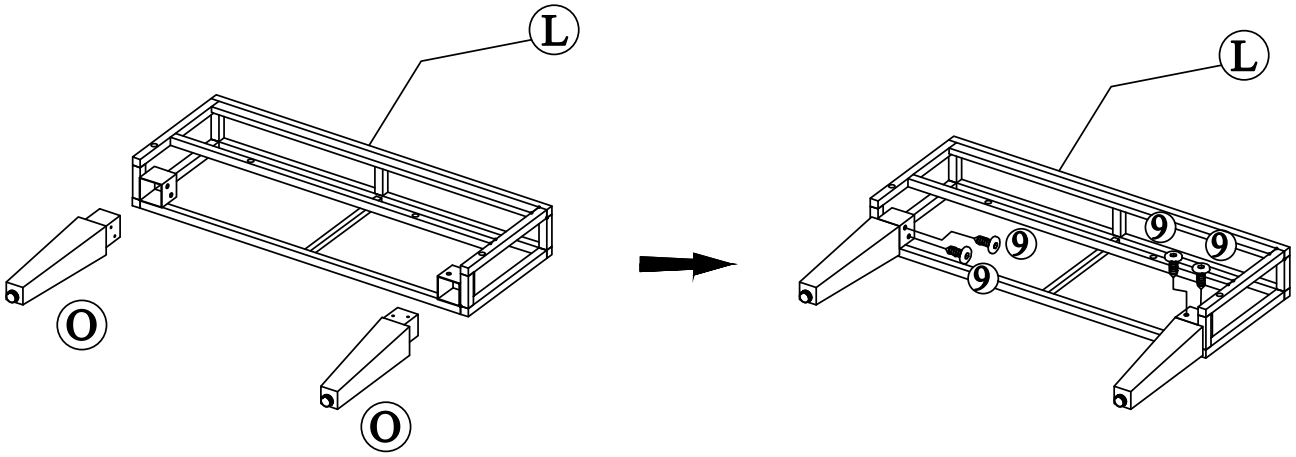

L*1	O*2	⑨*4

STEP 19

Connect part from Step 18 & Table top frame (J) with Bolt (4) & Washer (7)

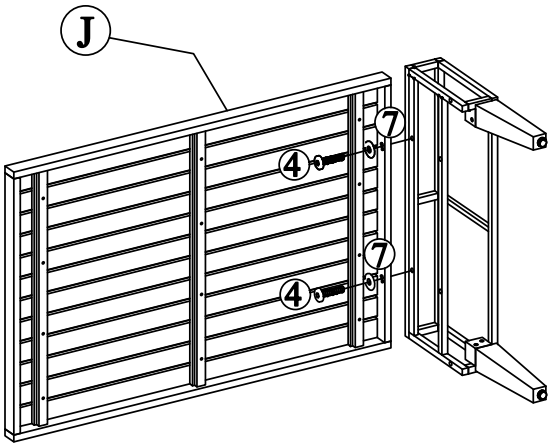

J*1	④*2	⑦*2

STEP 20

Connect part from Step 18 & part from Step 19, with Bolt (4) & Washer (7)

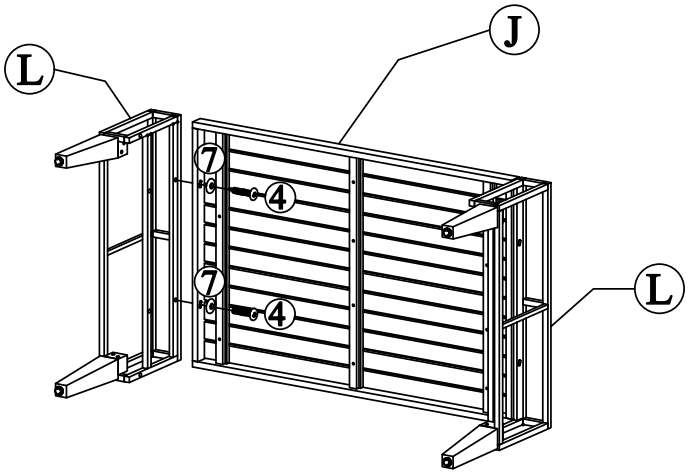

④*2	⑦*2

STEP 21

Connect part from Step 20 & Table shelf frame (K) with Bolt (4) & Washer (7)

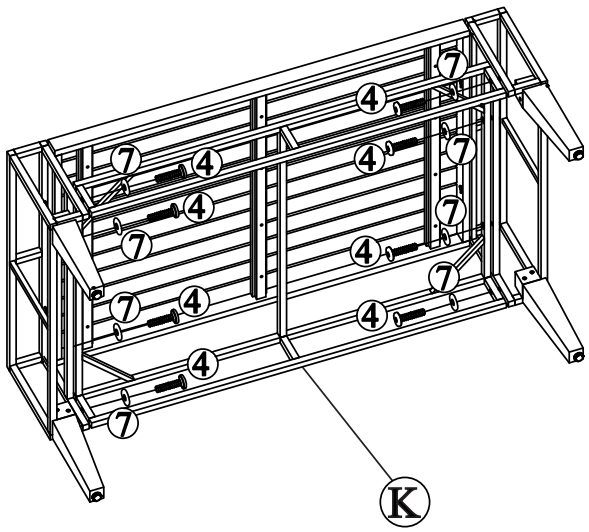

K*1	④*8	⑦*8

STEP 22

Table assembly have completed

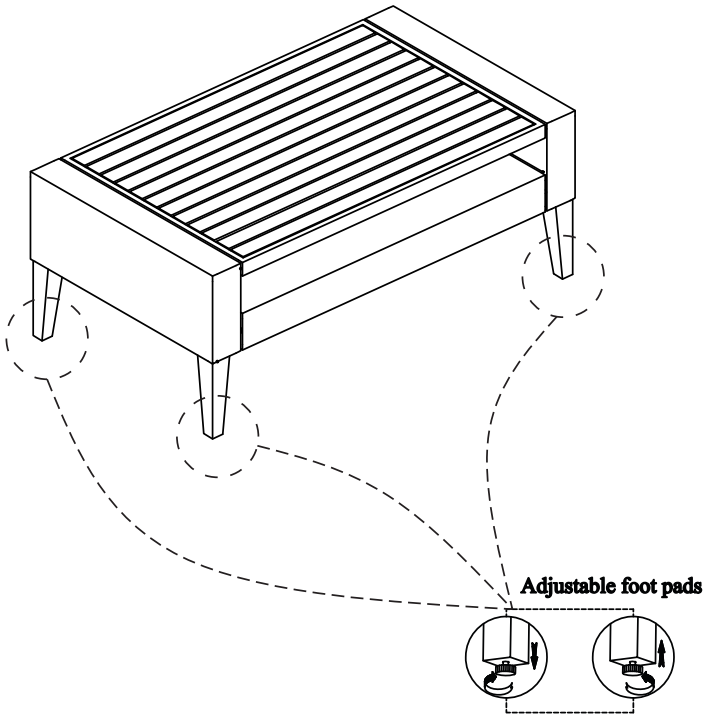

Cover the table with Cover cloth (W) when not in use

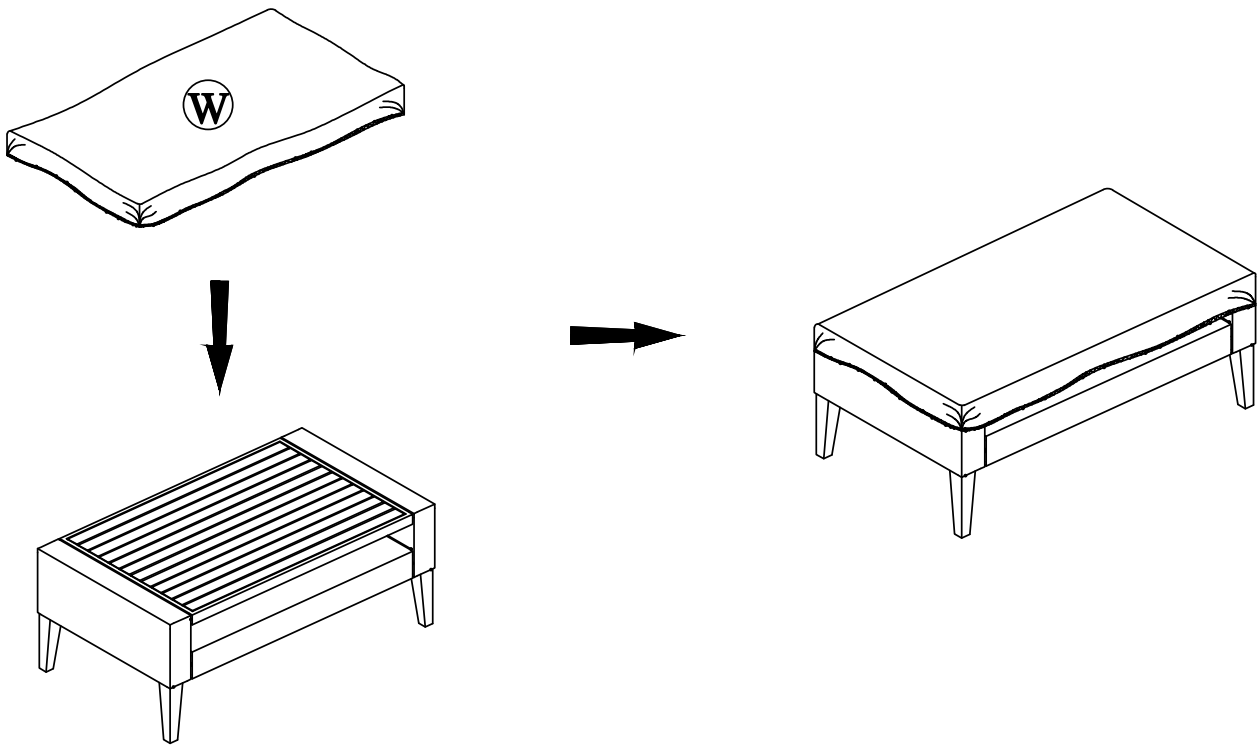

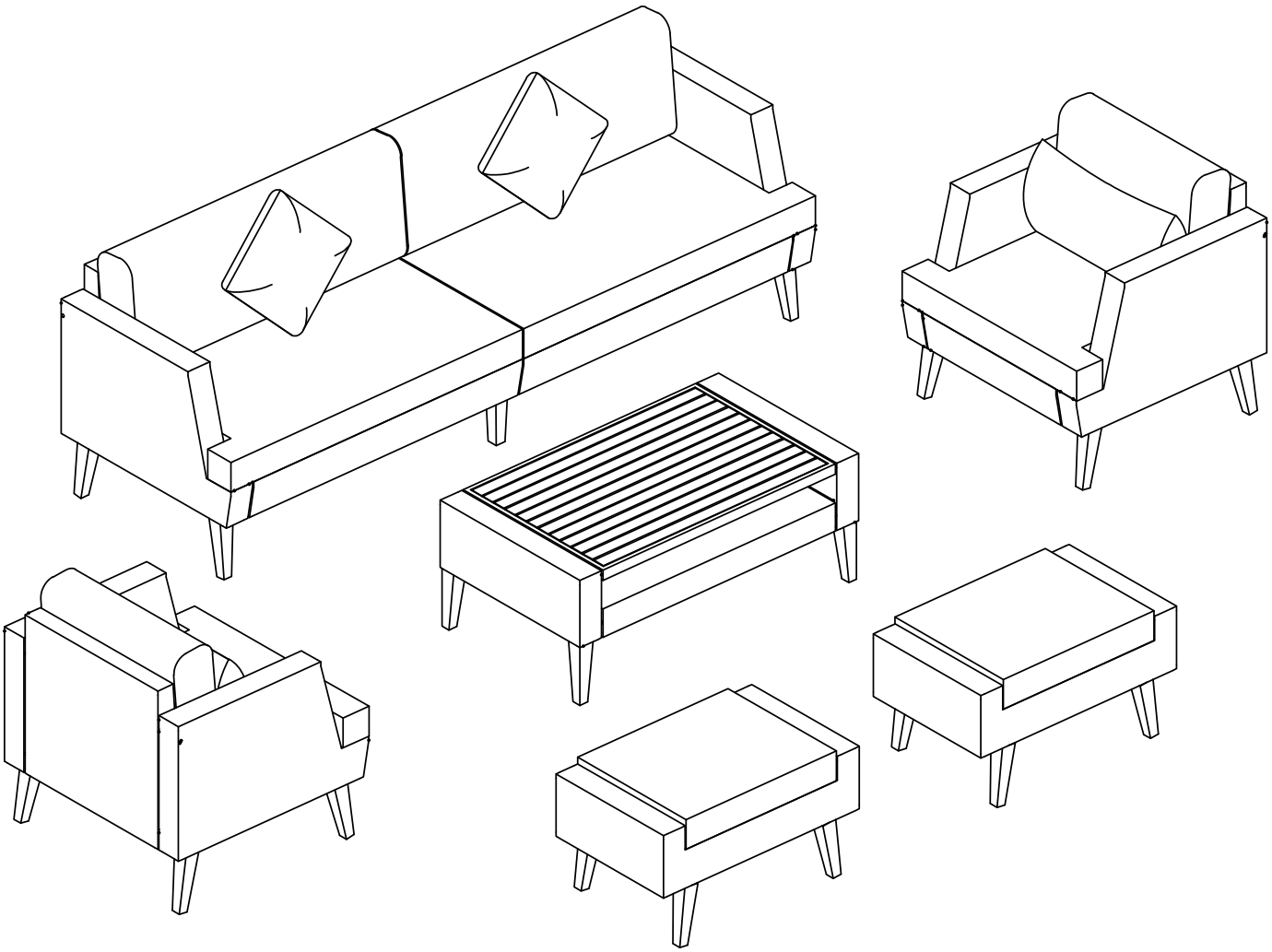

FINISH