Aroeve

Model: MK03

# Air Purifier
## User Manual




Customer Service: support@aroeve.com

PLEASE READ AND SAVE THESE IMPORTANT SAFETY INSTRUCTIONS

US

# SAFETY INSTRUCTIONS

**Important**:

Please read and comply with all of the instructions and warnings provided in this manual before using the product. Failure to comply with the instructions and warnings provided herein may result in inaccurate results or damage to the product itself.

**WARNING: To Reduce The Risk Of Fire Or Electric Shock, Do Not Use This Fan With Any Solid-State Speed Control Device.**
**Please use the special adapter that comes with the product**

01. Ensure the plug fits properly into a polarized power outlet.

02. This appliance should only be used in room with temperatures between 40˚F and 110˚F.

03. To avoid fire or shock hazard, connect the purifier into correct electrical outlet.

04. NEVER place on a soft surface such as a bed or sofa as this could cause the unit to tip over and the air inlet or outlet grills to be blocked.

05. Do not place anything on top of unit.

06. Do not move or tilt the unit while it is in operation.

07. Do not insert fingers or objects into the air inlet and air outlet.

08. Do not use outdoors.This unit is only suitable for indoor use, please avoid strong sunlight and rain.

09. Do not use near water to avoid electrical hazards.

10. Do not use the unit in wet or humid environments.

11. Do not handle the unit with wet hands.Thoroughly dry your hands before handling any part of the air purifier.

12. Do not place the unit directly below an air conditioner to prevent any moisture from getting in to the purifier.

13. Do not allow children,pet to play on or near the unit. Close supervision is necessary when any appliance is used by or near children, or disabled persons.

14. Keep unit away from heated surfaces and naked flames such as stove tops,ovens, raditors or computers.

15. Always turn the purifier off before unplugging it.

16. Always unplug the air purifier before moving or cleaning the unit, opening the rear cover, changing the filter and whenever the unit is not in use.

17. To disconnect the unit, be sure to pull the plug instead of the cord.

18. This unit does not remove carbon monoxide or radon.It can not be used as a safety device to prevent or clean up accidents with combustion processes and hazardous chemicals.

19. NEVER use detergents,gasoline,glass purifier,furniture polish,paint thinner,or other household solvents to clean any part of the purifier.

20. Non-professional personnel or unauthorized repair personnel shall not repair or transform the machine by themselves.

21. Do not operate the appliance with a damaged cord or plug. If the motor fan fails to operate or the unit has been dropped or damaged in any manner, contact the customer service.

22. Always allow 15 inches of clearance on all sides of the purifier.

# SAFETY INSTRUCTIONS

23. This appliance has a polarized plug (one blade is wider than the other). To reduce the risk of electric shock, this plug is intended to fit in a polarized outlet only one way. If the plug does not fit fully in the outlet, reverse the plug. If it still does not fit, contact a qualified electrician. Do not attempt to defeat this safety feature.

24. To Reduce The Risk Of Fire Or Electric Shock, Do Not Use This Fan With Any Solid-State Speed Control Device.

This device complies with part 15 of the FCC Rules. Operation is subject to the following two conditions: (1) This device may not cause harmful interference, and (2) this device must accept any interference received, including interference that may cause undesired operation.

NOTE: This equipment has been tested and found to comply with the limits for a Class B digital device, pursuant to part 15 of the FCC Rules. These limits are designed to provide reasonable protection against harmful interference in a residential installation. This equipment generates, uses and can radiate radio frequency energy and, if not installed and used in accordance with the instructions, may cause harmful interference to radio communications. However, there is no guarantee that interference will not occur in a particular installation. If this equipment does cause harmful interference to radio or television reception, which can be determined by turning the equipment off and on, the user is encouraged to try to correct the interference by one or more of the following measures:

—Reorient or relocate the receiving antenna.

—Increase the separation between the equipment and receiver.

# GETTING TO KNOW YOUR AIR PURIFIER

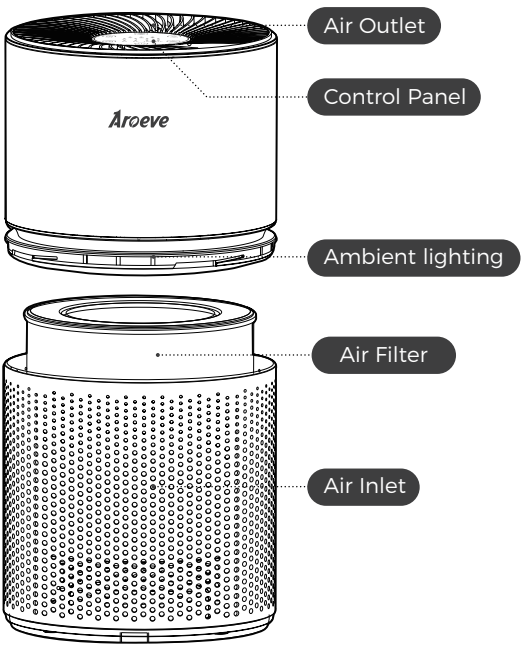


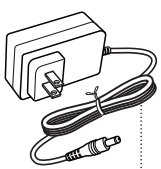


Package Contents
1 x Air Purifier
1 x 3-Stage
Original Filter
(Pre-Installed)
1 x User Manual
1 x Power Adapter

# SPECIFICATION

| | |
|---|---|
| Name：Air Purifier | Model No.：MK03 |
| Rated Voltage : 24V⎓ | Rated Power : 32W |

# GETTING STARTED

**Your air purifier comes with an original Filter included，do remember to remove the packaging for the filter before use.**

01. Pull out the filter cover. (See pic 1)
02. Remove the filter from its plastic package.(See pic 2)
03. Put the filter back into the air purifier and replace the filter cover.(See pic 3)

Note: Make sure you insert the filters in the correct position.




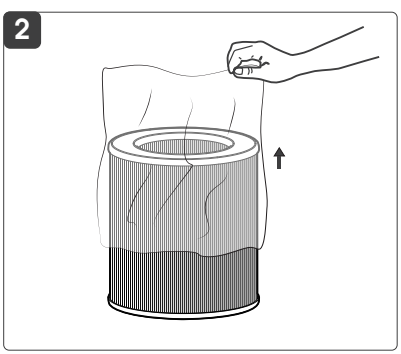


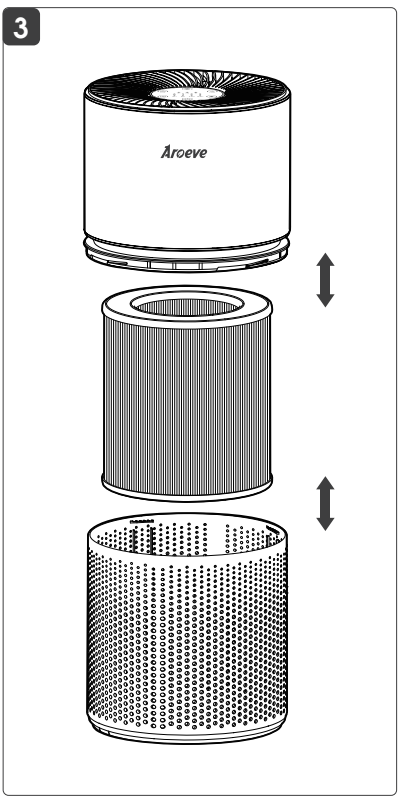

# CONTROL AND DISPLAY

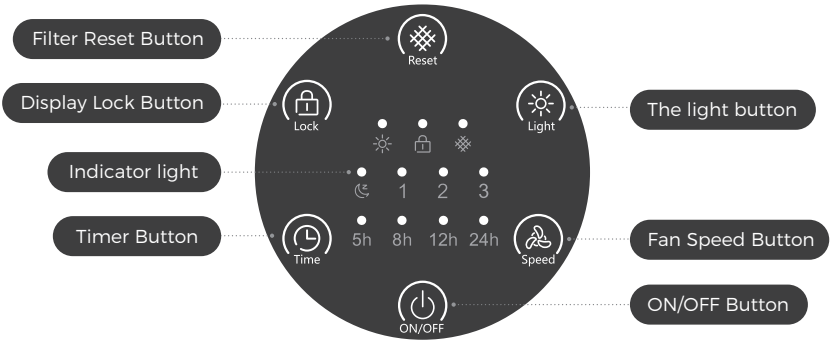


## 1. ON/OFF Button

01. Tap " ⏻ " to turn on the purifier. The fan will start on Level 2 , At the same time, the blue atmosphere light with the indicator light turned on

02. Tap " ⏻ "again to turn off the purifier.

## 2. Fan Speed Button

Tap " 👆 " to change fan speed between " 💤 " , 1, 2and3.
Note: Ambient lights will go off in sleep mode

## 3. Timer Setting

When the machine is working, press " 🕒 " to set the timer from 5H-8H-12H-24H-OFF.
When the time is up, the machine will turn off automatically. The timer indicator lights will show the corresponding time.

## 4. Display Lock Button

Locking the display prevents settings from being accidentally changed. Buttons will not respond to being tapped.
Tap and hold " 🔒 " for 2 seconds to lock/unlock the display.
Note: You can turn the display on and off even if the display is locked.

## 5. The light button

Tap " ☀ " to control the lighting function, Atmosphere light can be turned on/off.

## 6. Filter Reset Button

When the " ▦ " lights up, it will prompt you to check the filter element for replacement.
After replacement, Long press the " ▦ " button for 5 seconds to reset the filter element.
After the reset is successful, the indicator light will be off and the use time will be recorded again

## 7. Memory Function

When the air purifier is plugged in, it will remember its previous fan speed and light setting
Note: The air purifier will not remember timers

# CLEANING AND MAINTENANCE

## Cleaning the Air Purifier

**We recommend that you clean the air purifier at least once every 3 months to extend storage.**
**To reduce the risk of fire, electric shock, or injury to persons**

- Unplug before cleaning.
- Use only a dry cloth to wipe the external surfaces of the air purifier.DO NOT USE WATER, WAX POLISH, OR ANY CHEMICAL SOLUTION.
- Vacuum the inside of the air purifier.

## Cleaning the Filter

- The outer pre-filter should be cleaned every 2–4 weeks to increase the efficiency and extend the life of your filter.
- Clean the pre-filter using a soft brush or vacuum hose to remove hair, dust, and large particles.
- Do not clean the filter with water or other liquids.

## Maintenance

**If your Air Purifier will not be used for more than 30 days, we recommend that you:**

- Remove the HEPA Filters from the unit.
- Wrap the HEPA Filters in an air tight plastic bag.
- Remove the Pre-Filter and Enhanced Odor and VOC Filters and place them in an air tight plastic bag.

# TROUBLESHOOTING

| Problem | Possible Solution |
|---|---|
| Air purifier will not turn on or respond to button controls. | Plug in the air purifier. |
| | Check to see if the power cord is damaged. If it is, stop using the air purifier and contact Customer Support. |
| | Plug the air purifier into a different outlet. |
| | The air purifier is malfunctioning. Contact Customer Support |
| Airflow is significantly reduced. | Make sure the filter is removed from its packaging and properly in place. |
| | Leave 15 in / 38 cm of clearance on all sides of the air purifier. |
| | The pre-filter may be clogged by large particles, such as hair or lint, blocking airflow. Clean the pre-filter. |
| | Replace the filter. |
| Air purifier makes an unusual noise and the air outlet is less. | Make sure the filter is properly in place with plastic packaging removed. |
| | Make sure the air purifier is operating on a hard, flat, even surface. |
| | Replace the filter. |
| | The air purifier may be damaged, or a foreign object may be inside. Stop using the air purifier and contact Customer Support . Do not try to repair the air purifier |
| Strange smell coming from the purifier. | Replace the filter element. |
| | Make sure not to use your purifier in an area with high humidity or while diffusing essential oils. |
| | Contact Customer Support. |

If your problem is not listed , please contact Customer Support.

# WARRANTY

We appreciate your feedback and will do our best guarantee your satisfaction.

Within 2 year after your purchase,shall the product has defects, we will provide a refund or resend you a new one. Please email us with your concern and order number. Your inquiries will be taken care of as soon as possible.

This warranty only cover orders from authorized brand online stores and our official website. We are not responsible for any purchases from other distribution channels.

**Contact Customer Support Team:**

Email: support@aroeve.com

Guangdong Shunde DOUHE Electronics Technology Co.,Ltd
203 Room,Second Phase West Block,Guangdong Industrial Design City,Beijiao,Shunde district,Foshan City, Guangdong Province,China