HUSKY™®

ONE
HOME COLLECTION

Instruction manual

- Glass Door Drinks Cooler – Countertop and Undercounter
- Solid Door Refrigerator – Countertop and Undercounter
- Retro Refrigerator – Countertop and Undercounter

To ensure safe operation, please read this instruction manual thoroughly before use.

Please retain for future reference.

Husky reserve the right due to possible changes to design to alter the instruction manual without notice.

For customer service, please call (310) 645 6400 or Email: contact@promounts.com

CONTENTS

Safety Instructions & Warnings....2
Disposal of old appliances and packaging....4
Electrical safety....4
Minimising energy consumption of your appliance....4
Handling your appliance....5
Positioning your appliance....5
Storing food....5
Product overview....6
Glass Door Drinks Coolers Countertop and Undercounter....6
Solid Door Refrigerators Countertop and Undercounter....7
Retro Refrigerators Countertop and Undercounter....8
To operate....9
Temperature selection....9
Setting the thermostat – Countertop models....10
Setting the thermostat – Undercounter models....10
Changing the LED lightbulb....10
Door Reversal....11
Countertop and Undercounter Glass Door and Solid Door Models....11
Countertop and Undercounter Retro Refrigeration Models....12
Maintenance and cleaning....13
When your appliance is not in use....13
Defrosting....13
Power Cuts....13
Troubleshooting....14
Warranty....15

SAFETY INSTRUCTIONS & WARNINGS

IMPORTANT: Please read this manual before installing and switching on this appliance. The manufacturer assumes no responsibility for incorrect installation and usage of this appliance. Please keep this manual in a safe place for future reference.

- Do not use damaged appliances. If you are in any doubt, contact the manufacturer
- Do not use adaptors/extension sockets when connecting the appliance to the electrical power supply
- Do not allow children to play with the appliance, or to sit on it or hang onto the door
- Children aged from 3 to 8 years are allowed to load and unload refrigerating appliances
- This appliance can be used by children aged 8 years and above and persons with reduced physical, sensory or mental capabilities or lack of experience and knowledge if they have been given supervision or instruction concerning use of the appliance in a safe way and understand the hazards involved. Children shall not play with the appliance. Cleaning and user maintenance shall not be made by children without supervision

- Do not store explosive substances such as aerosol cans with a flammable propellant or other explosive or flammable material in this appliance
- For safety, always clean up any spillages inside or outside of the appliance
- WARNING! Do not immerse the electrical parts of this appliance in water or other liquids. Never hold the appliance under running water
- WARNING! Do not obstruct or cover the ventilation openings
- WARNING! Do not use mechanical devices or other means to accelerate the defrosting process
- WARNING! Do not use electrical appliances inside the storage compartments of the appliance
- WARNING! When positioning the appliance ensure that the supply cord is not trapped or damaged
- WARNING! Do not locate multiple portable sockets, outlets or portable power supplies at the rear of the appliance
- Do not plug in damaged plugs
- Do not pull, twist or damage the power cable
- Do not plug in or unplug the appliance with wet hands to prevent electrical shock
- Bottles containing alcohol must be sealed in airtight bottles or containers to avoid spillages or fermentation
- Do not cover the body or top of the appliance
- WARNING! Do not damage the refrigerant circuit
- WARNING! Risk of fire or explosion. Dispose of refrigerator properly in accordance with applicable federal or local regulations
- WARNING! Risk of fire or explosion due to puncture of the refrigerant tubing: follow handling instructions carefully
- DANGER - Risk of fire or explosion. Flammable refrigerant used. To be repaired only by trained service personnel. Use only manufacturer-authorized service parts.
  Any repair equipment used must be designed for flammable refrigerants. Follow all manufacturer repair instructions
- DANGER - Risk of fire or explosion. Flammable refrigerant used. Do not use mechanical devices to defrost refrigerator. Do not puncture refrigerant tubing.

WARNING: THE METAL RAILS ON THE EXTERNAL UNDERNEATH OF THIS APPLIANCE MAY HAVE SHARP EDGES, SO ALWAYS UNPACK AND HANDLE WITH CARE.

DO NOT DRAG THE APPLIANCE: PLACE CAREFULLY IN POSITION TO AVOID THE SCRATCHING OF SURFACES.

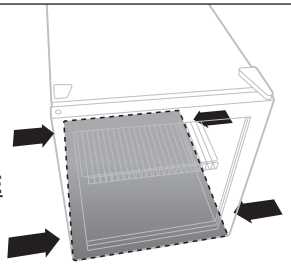

DISPOSAL OF OLD APPLIANCES

BE SURE TO MAKE ANY LOCKS UNUSABLE. IF POSSIBLE, REMOVE THE DOOR(S) AND DISCARD SEPARATELY.
WARNING – CHEMICAL HAZARD: DO NOT ALLOW CHILDREN TO PLAY WITH THE OLD APPLIANCE. CONTACT YOUR LOCAL AUTHORITY FOR PROPER DISPOSAL PROCEDURES.
Before disposing of an old appliance, please make sure it is switched off and safe. Unplug the appliance and break any locks in order to avoid children becoming trapped.
Please note: the cooling system contains gases and refrigerants which require specialist waste disposal.
Contact your local waste disposal depot for proper disposal of an old appliance and contact your local authority if you have any questions.
Please ensure the pipework of your appliance is not damaged prior to disposal.

WARNING: Risk of child entrapment . Before you throw away your old refrigerator or freezer:
- Take off doors
- Leave the shelves in place so that children may not easily climb inside

DISPOSAL OF PACKAGING

All the packaging materials with your appliance may be disposed of without danger to the environment.
The cardboard carton and polythene wrappers are recyclable – check with your local authority for the best recycling options. The expanded polystyrene materials included in the packaging can be placed in general waste.

ELECTRICAL SAFETY

THIS APPLIANCE MUST BE PLUGGED INTO AN EARTHED SOCKET.
- Before switching on, make sure that the voltage of your electricity supply is the same as that on the rating plate. This appliance is designed to operate on 110-120V/60Hz. Connection to any other power source may damage the appliance
- This appliance may be fitted with a non-rewireable plug. If it is necessary to change the fuse in the plug, the fuse cover must be refitted. If the fuse cover is lost or damaged, the plug must not be used until a suitable replacement is found
- If the plug has to be changed, because it not suitable for your socket or becomes damaged in any way, it should be replaced by a qualified electrician. The plug removed must be disposed of safely as insertion into a 13 Amp socket could cause an electrical hazard
- Always remember to unplug your appliance before cleaning.

HOW TO MINIMISE THE ENERGY CONSUMPTION OF YOUR HUSKY APPLIANCE

- Energy consumption will be lower if the appliance stands in a well ventilated space and in particular if the vent at the back of the appliance is clear of obstruction
- Do not place the appliance in direct sunlight or near a heat source such as ovens, radiators, heaters, etc as this will increase energy consumption
- Keep the door closed as much as possible
- Setting the thermostat cooler (towards the highest number on the dial) means higher energy consumption, so set only as cool as you really require
- Do not overfill the appliance - overfilling means the cool air cannot circulate freely inside the cabinet which may slow the process of cooling and make the cabinet less efficient

- Defrost the appliance if frost can be seen building up inside - frost will increase energy consumption and make the cooling process slower (see section 'Defrosting')
- Turn the appliance off completely if it is not required for a period of days or longer to avoid wasting energy (see also section 'When not in use').

HANDLING YOUR APPLIANCE

This appliance uses R600a (Isobutane) natural refrigerant gas as part of its cooling system. R600a is environmentally friendly but can be combustible. Care should therefore be taken when handling or transporting the product to ensure that none of the refrigeration circuit components are damaged.
To lift the appliance safely, tilt it backwards by no more than 45 degrees, hold the base and rear corners of the appliance carefully. Never use the door handles for lifting.
To move the appliance on a flat level surface, please note the warning on page 3 to avoid damaging your surface.
This appliance is heavy and could cause injury. Ensure there are adequate people present to move the appliance.

POSITIONING YOUR APPLIANCE

- Ensure that the appliance is situated:
  - Away from direct sunlight and in a dry and well-ventilated space
  - Away from stoves, ovens, radiators and any other heating appliances
  - With a recommendation of at least 15cm clearance around the appliance
- Do not position the appliance in conservatories or outbuildings with extreme high or low ambient temperatures
- Do not use outdoors or leave in rain
- Do not place anything on your appliance
- The appliance must be used in the vertical position and stand on an even, flat surface for quieter operation
- If your appliance is to be to be placed on carpet, support it with a wooden board underneath. Be aware that placing the appliance on carpet may mean that heat from the compressor may cause the carpet to fade
- Ensure that the plug is easily accessible.

STORING FOOD

Glass door drinks coolers are not suitable for the storage of fresh food or perishable drinks.
To avoid contamination of food, please respect the following instructions:
- Opening the door for long periods can cause a significant increase in the temperature in the compartments of the appliance
- Clean regularly surfaces that can come in contact with food and accessible drainage systems
- Store raw meat and fish in suitable containers in the refrigerator, so that it is not in contact with or drip onto other food
- If the refrigerating appliance is left empty for long periods, switch off, defrost, clean, dry and leave the door open to prevent mould developing within the appliance.

THIS APPLIANCE IS INTENDED TO BE USED IN HOUSEHOLD AND SIMILAR APPLICATIONS SUCH AS:

- Staff kitchen areas in shops , offices and other working environments
- Farm houses and by clients in hotels, motels and other residential type environments
- Bed and breakfast type environments
- Catering and similar non-retail applications

Glass Door Drinks Coolers: Countertop and Undercounter

SPECIFICATIONS

- This appliance is a cellar compartment for the storage of non-perishable beverages. It is not suitable for the storage of fresh food or perishable drinks
- It is intended strictly for domestic indoor use.

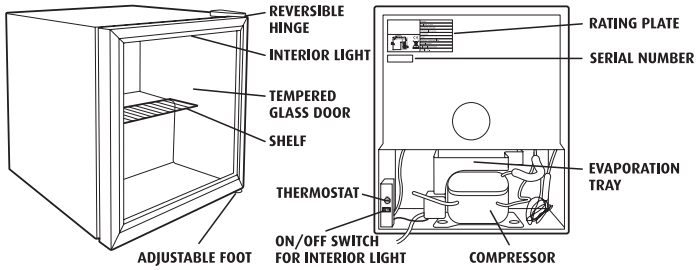

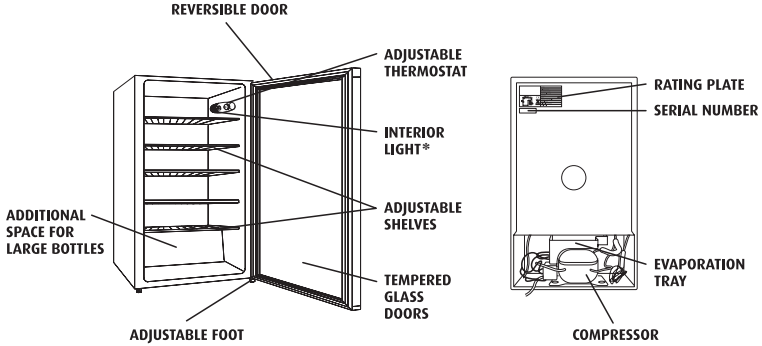

* Please note only on certain models.

Solid Door Fridges: Countertop and Undercounter

SPECIFICATIONS

- This appliance is intended strictly for domestic indoor use.

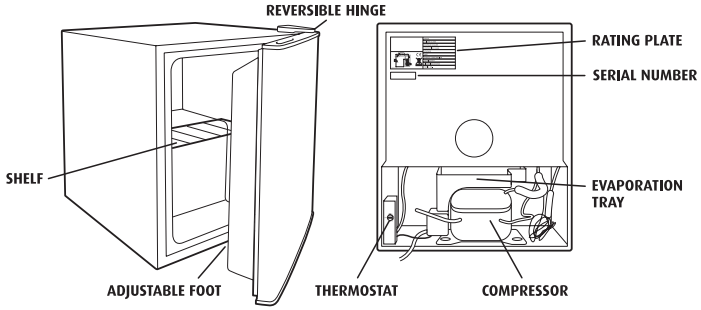

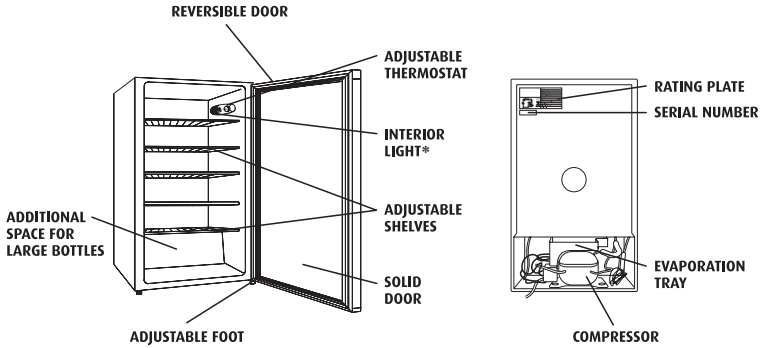

* Please note only on certain models.

Retro Refrigerators: Countertop and Undercounter

SPECIFICATIONS

- This appliance is intended strictly for domestic indoor use.

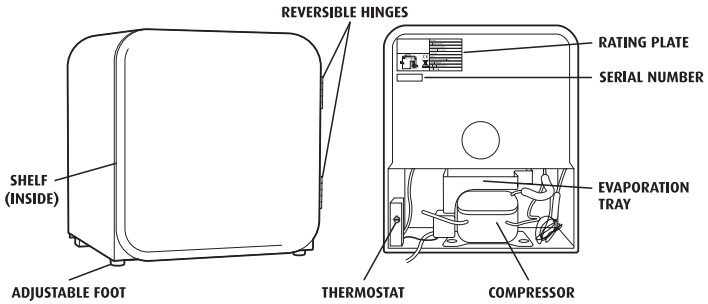

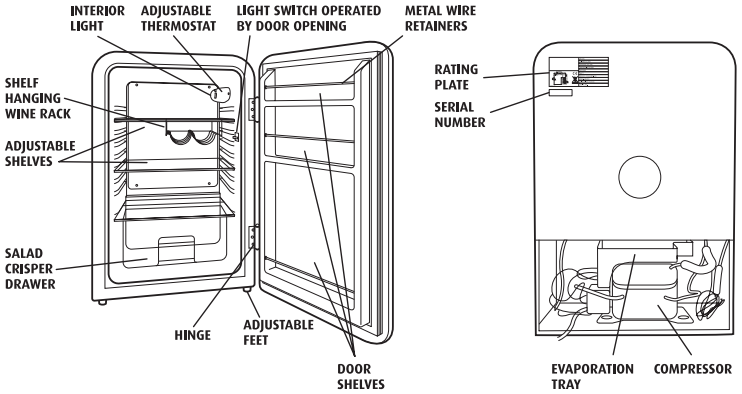

TO OPERATE

- When the appliance has been positioned, adjust the feet to ensure the unit is stable. This is essential to ensure quiet running and proper door opening/closing
- Ensure that the appliance is not connected to the power and clean the interior compartment following the instructions on page 13
- Remove all transportation tapes
- **CONNECT TO THE ELECTRICAL SOCKET BUT DO NOT SWITCH ON THE POWER FOR AT LEAST 4 HOURS.** The coolant within the product needs time to settle after it has been transported and put in to position. Failure to do this will affect the cooling performance of your appliance
- Follow the instructions below to adjust the thermostat to the required temperature. Leaving the thermostat at 0 will mean that the appliance will not start operating
- There may be an odour when you first switch on the appliance, it will disappear as it starts to cool
- The following sounds are perfectly normal:
  - Faint gurgling or bubbling sounds as the refrigerant is pumped to the cooling system
  - A slight whirring or pulsating noise as the compressor is working
  - A slight click as the thermostat cycles in and out and controls the compressor
- After the appliance has been unplugged, leave for three minutes before plugging it in again.

TEMPERATURE SELECTION

The thermostat situated on the back (inside for undercounter models) of your appliance controls the temperature within the appliance. This can be rotated left or right to regulate the temperature.
On the thermostat, 1 is the warmest setting and 5 on countertop or 7 on undercounter models is the coldest.
The thermostat should be adjusted according to the amount of product in the appliance and the ambient temperature. The guide for setting the thermostat is as follows:

Winter — Setting 1-2
Spring and Autumn — Setting 2-4
Summer — Setting 4-5 (Countertop); 6-7 (Undercounter)

Once the temperature control has been set, close the door. Do not open the door again for a minimum of 4 hours to allow the appliance to reach the required temperature.

WARNING: If the thermostat is set to too cold a setting, beverages may become frozen. In extreme circumstances, glass bottles may even break. Always exercise caution when setting the temperature.

SETTING THE THERMOSTAT – COUNTERTOP MODELS

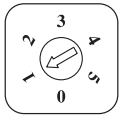

The controller is positioned on the external back wall of the appliance. The settings 1 (MIN) – 5 (MAX) regulate the interior temperature.

Setting 1 (or MIN) = lowest setting (warmest internal temperature)
Setting 5 (or MAX) = highest setting (coldest internal temperature).

SETTING THE THERMOSTAT – UNDERCOUNTER MODELS

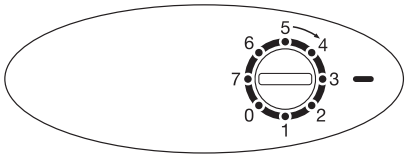

The controller is positioned on the interior side wall of the appliance. Thermostat "0" position indicates the appliance is turned off although power is still connected. By turning the thermostat dial clockwise, the appliance will turn on automatically. The settings 1 (MIN) – 7 (MAX) regulate the interior temperature of the appliance.

Setting 0 = Off (not operating)
Setting 1 (or MIN) = lowest setting (warmest internal temperature)
Setting 7 (or MAX) = highest setting (coldest internal temperature).

CHANGING THE LED LIGHT BULB (where applicable)

Before removing the light bulb, you must unplug the appliance. Failure to do so may result in electrical shock or personal injury.

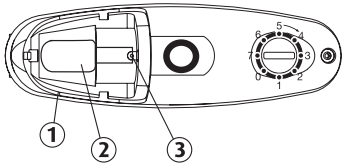

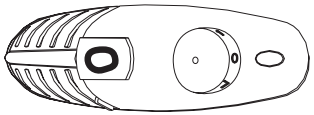

- Remove the light bulb cover (1) by gently removing the screw (3)
- Unscrew the bulb (2) Fit a 1w E14 LED bulb that is the same shape and size
- IMPORTANT: replace the light cover to its original position.

DOOR REVERSAL

The door can be opened from left to right and vice versa. Should you wish to change the opening direction, please follow these instructions.

Note: all parts removed should be kept safely. you will require these for the reinstallation of the door.

Disconnect the appliance from the power supply. Never tilt the fridge more than 45° during this process and do not lay the fridge on its side.

COUNTERTOP AND UNDERCOUNTER GLASS DOOR AND SOLID DOOR APPLIANCES

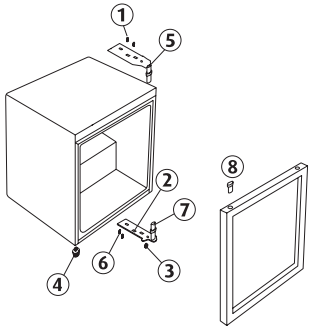

Fig. 1 Position of components prior to reversal of the door hinge.

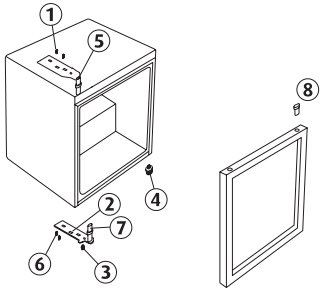

Fig. 2 Position of components after reversal of the door hinge.

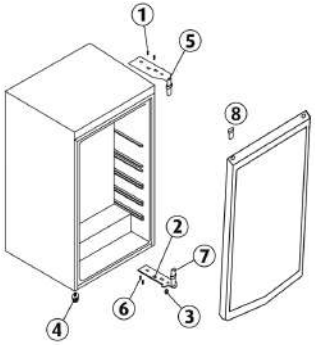

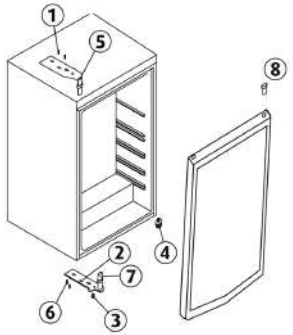

- Remove the two screws (1) that hold the upper hinge (5)(right side) to the frame
- Lift the door off and place on a padded surface to prevent scratching
- Remove the blanking plug (8) from the hole in the upper left corner of the door and transfer it to the uncovered hole on the upper right corner. Press firmly to secure it
- Remove the two screws (6) that hold the lower hinge (2)
- Remove the adjustable front left foot and transfer it to the other side
- Remove the bolt pin(7) from the lower hinge (2) and reverse the direction of the lower hinge. Secure the lower hinge (2) to the left side of the lower frame with the

two screws (6) Re-insert the bolt pin (7). Set the door into position, making sure it is seated comfortably onto the lower hinge (2)

- Holding the door closed, secure the upper hinge (5) into the top frame with the two screws (1). Check the door is level and tighten the screws firmly.

Check that the door opens and shuts correctly after you have completed the door reversal process. The appliance must now be upright for a minimum of 3 hours before switching on again.

COUNTERTOP & UNDERCOUNTER RETRO REFRIGERATORS

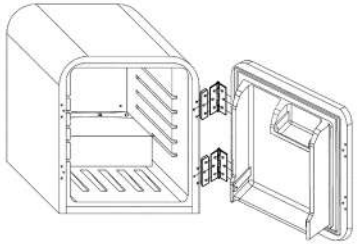

Fig. 1 Position of components prior to reversal of the door hinge.

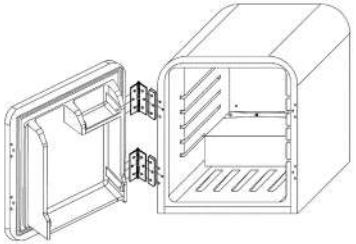

Fig. 2 Position of components after reversal of the door hinge.

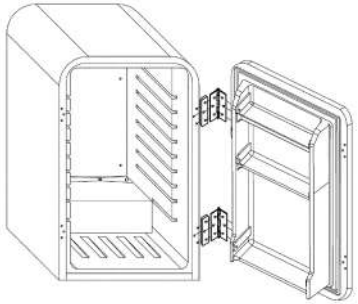

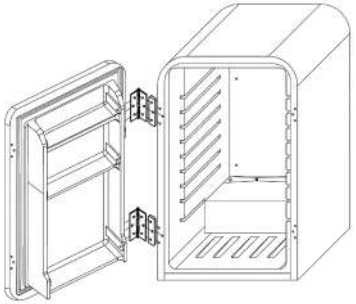

- Support the door from the bottom
- Remove the six screws that affix the hinges and two spacers to the cabinet frame
- Place the door flat on a padded surface to prevent scratching
- Remove the six hinge screws that affix the hinges to the Retro door
- Remove the blanking plugs from the opposite side and use to plug the holes exposed by the removal of the hinge
- Screw the hinges onto the opposite side of the door
- Pick the door up and carefully align with the cabinet holes
- Screw the remaining six screws into both hinges and the two spacers into the cabinet to secure the door.

Check that the door opens and shuts correctly after you have completed the door reversal process. The appliance must now be upright for a minimum of 3 hours before switching on again.

MAINTENANCE & CLEANING

Disconnect the appliance from the power before cleaning. Always reconnect the plug with dry hands. Never pour water over the appliance.

Interior Cleaning

- Wash the interior with warm water and neutral detergent such as bicarbonate of soda (5ml to 0.5 litres of water)
- Do not use abrasive products, detergents or soaps
- Dry all surfaces thoroughly.

Exterior Cleaning

- Wash the outer cabinet including the back and bottom of the appliance with warm soapy water
- Do NOT use abrasive products as this can damage the finish
- There are sharp edges on the underside of the product as always take care when handling the appliance
- Once or twice a year dust the compressor at the back of the appliance with a brush or vacuum cleaner to maintain efficient performance
- Dry all surfaces thoroughly.

WHEN YOUR APPLIANCE IS NOT IN USE

If the appliance is not being used for long periods:

- Unplug your appliance
- Clean and dry the inside of the appliance. Leave the door slightly open to allow it to dry completely
- An appliance which is unused without being cleaned may start to smell musty or develop mildew.

DEFROSTING

- The surface of the evaporator ices up when the appliance is working normally. It can also occur when the door has been left open or the thermostat has been set too high. If the frost layer is more than 3mm/⅛" thick, the appliance must be defrosted and cleaned to avoid unnecessary energy consumption and inefficient operation.

1. Remove all items inside and unplug the appliance.
2. After defrosting, clean the appliance (see instructions above) and allow it to dry.

POWER FAILURE

- If a power cut occurs, do not open the door more often than necessary in order to conserve cold air.

TROUBLESHOOTING

Before returning your appliance to where you purchased it from, check the following points as you may be able to solve any problem yourself.

Problem	Solution
The appliance does not work	• Check that the appliance is turned on and thermostat is not set at 0 • Check power cable is plugged in and that the fuse has not blown • Check that the voltage is correct for the appliance • Try a different socket which is known to work.
The temperature is not cold enough	• Check power cable is connected and that the fuse has not blown • The wrong temperature selected. Adjust setting on the thermostat (see page 10) • The appliance is overfilled • Appliance exposed to direct sunlight or heat source • The door is being opened too often or the door gasket is damaged • Check that the ambient temperature is within the operational limits of the appliance.
Internal temperature too high or low	• Check thermostat – is it set too high or low? • The correct clearances are at the sides/back • The door is not being opened too often • The door is not closing completely.
Unusual noises or noisy operation	• Check that the appliance is on a flat, level surface and is stable • Check the clearance around the appliance and that it is not touching any other items • **Bubbling and gurgling sound:** This noise is NORMAL and is emitted as the coolant fluid flows through the pipes within the system • **Water flowing sound:** This is the NORMAL sound of water flowing into the drain trough during the defrosting process • **Noisy operation:** Compressor noise is NORMAL when the compressor is being energised.
Outer surfaces are wet	• Water source or leak too near the appliance – dry surfaces thoroughly and move the appliance • Inner surfaces are wet • Caused by condensation – dry the inside of the appliance • Door opened too often or kept open too often.
Inner surfaces are wet	• Caused by condensation – dry the inside of the appliance • Door is opened too often or kept open too long.
Standing water inside or on the floor/worktop	• Check if the evaporation tray is full and empty it if required.
Smell/odour	• Check the fridge contents • Check for spillages inside the appliance. Remove shelves and drawers to check prior spills have been cleaned up.
The doors do not close properly	• Ensure there are no obstructions preventing door closure • Check that the door compartments and shelves are correctly in place • Check that the door seal is not warped or damaged • Check that the appliance is level.

WARRANTY

Please refer to your warranty card supplied with this unit or contact Email:

contact@promounts.com

HELPLINE/TECHNICAL SUPPORT

For Technical support call : 1 (888) 778 0445 or Visit www.one-products.com

ONE Products / Promounts
20218 Hamilton Ave
Torrance,CA 90502
United States of America
Phone: (310) 645 6400
www.one-products.com