1/2"(3/8")Air Ratchet Wrench

1) Technical Datum

Drive Size	1/2"(3/8")
Capacity Bolt Dia.(mm)	M13(M10)
Max Torque	88N.m
Applied Torque	1.4–7kgm
Free–load Speed	160r.p.m
Inlet Adapter	1/4"
Air Pressure	6kg/cm²
Overall Length	260mm
Weight	1.17kg

2) Application

The tool is air ratchet wrench with the characteristics of large power, high efficiency, various application.It is widely Suitable for screw and unscrew work of big truck and lorry.Also can be used in the maintenance of bus and general Equipments of large machines.

3) Features

All the parts are processed by precious machine tool. The dimension of process face is very precious.all the material of impact structure is high quality steel,the heat treatment system extend the service life,so it can stand large impact and wearing. The tools with the ingenious structure ,which make the operator feel comfortable and reduce the tire sense largely.

4) Operations and Maintenances

a) The moisture of the air compressor and gas storage cylinder must be cleaned thoroughly. Air supply pipe is not allowed to leak gas.

b) Check the air pressure meter whether the pressure is 8kgs. The safe working pressure is within the range of 6.3kgs.

c)Make sure the tool can normally operate,please install the filer and automatic lubricator on the outlet of the air compressor.

d) Without lubricator, Please keep the air inlet mouth full of lubrication grease before and after working, which can reach the best performance(please use the professional grease of the air wrench).

e) When the tool can not work, please insert the lubrication grease which can make it turn. If always can not remove the obstacle, please contact with the dealer.

EXPLODED VIEW

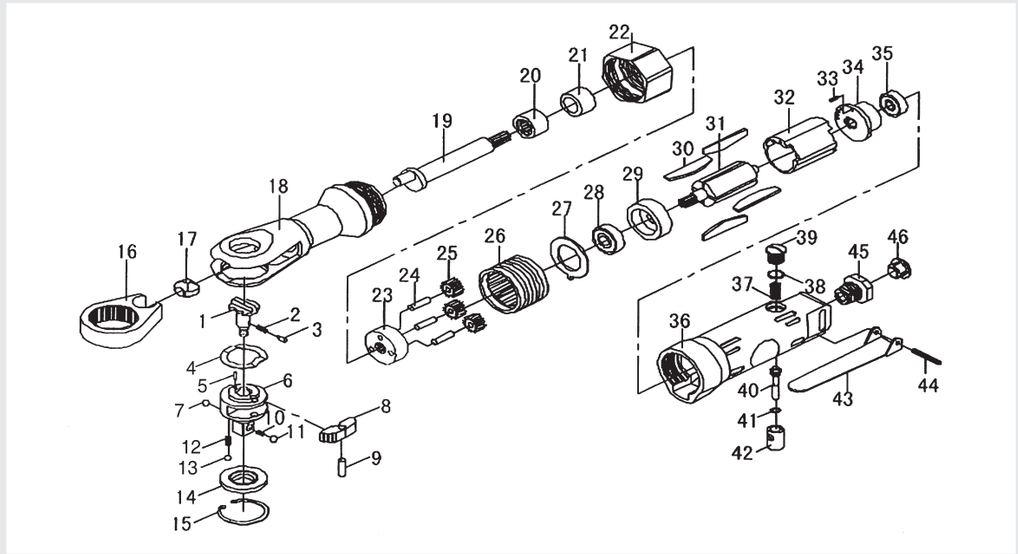

PARTS LIST

pos	description	q' ty
1	Reverse Button	1
2	Ratchet Spring	1
3	Lock Pin	1
4	Wear Washer	1
5	Ratchet Pawl Pin	1
6	Ratchet Anvil	1
7	Steel Ball	1
8	Ratchet Pawl	1
9	Ratchet Pawl Pin	1
10	Detent Spring	1
11	Detent Ball	1
12	Spring	2
13	Steel Ball	2
14	Thrust Washer	1
15	Snap Ring	1
16	Ratchet Yoke	1
17	Drive Bushing	1
18	Ratchet Housing	1
19	Crank Shaft	1
20	Needle Bearing	1
21	Bushing	1
22	Clamp Nut	1
23	Idler Gear Plate	1

pos	description	q' ty
24	Pin	3
25	Planet Gear	3
26	Idler Gear Housing	1
27	Exhaust Cover	1
28	Ball Bearing	1
29	Front End Plate	1
30	Rotor Blade	4
31	Rotor	1
32	Cylinder	1
33	Spring Pin	1
34	Rear End Plate	1
35	Ball Bearing	1
36	Motor Housing	1
37	Spring	1
38	O–Ring	1
39	Valve Screw	1
40	Throttle Plunger	1
41	O–Ring	1
42	Throttle Valve	1
43	Throttle Lever	1
44	Throttle Lever Pin	1
45	Air Inlet	1
46	Dustproof Cap	1