Parrot Uncle

F6305BKQ110V

CEILING FAN INSTALLATION MANUAL

READ AND SAVE THESE INSTRUCTIONS

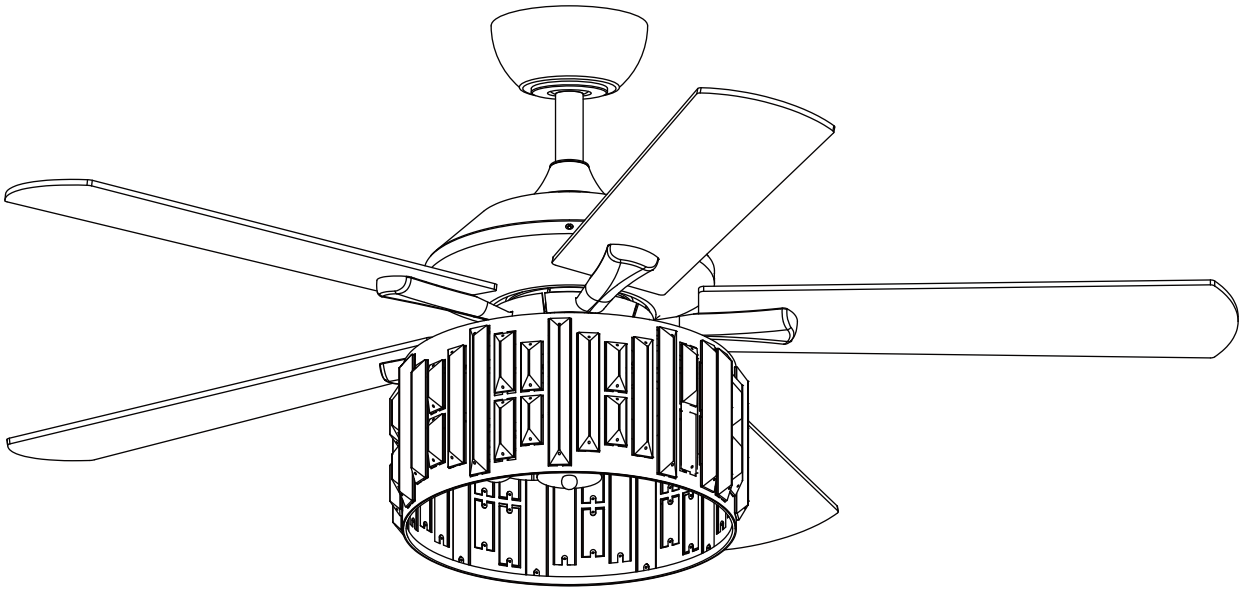

English

www.parrotuncle.com

WARNING: SHUT POWER OFF AT FUSE OR CIRCUIT BERAKER

Safety Information

1. To reduce the risk of electric shock, the electricity has been turned off at the circuit breaker or fuse box before begin.

2. All wiring must be in accordance with the National Electrical Code NASI/NFPA 70-1999 and local electrical codes. Electrical installation should be performed by a qualified licensed electriccian.

3. The outlet box and support structure must be securely mounted and capable of reliably supporting 35lbs(15.9kg). Use only UL listed outlet boxes marked "Acceptable for Fan Support of 35lbs(15.9kg) or less."

4. The fan must be mounted with a minimum of 7 ft. (2.1m) clearance from the trailing edge of the blades to the floor.

5. Do not operate the reversing switch while the fan blades are in motion. You must turn the fan off and stop the blades before you reverse the blade direction.

6. Do not place objects in the path of the blades.

7. To avoid personal injury or damage to the fan and other items, please be careful when working around or cleaning the fan.

8. Electrical diagrams are for reference only. Light kits that are not packed with the fan must be UL-listed and marked suitable for use with the model fan you are installing. Switches must be UL General Use Switches. Refer to the instructions packaged with the light kits and switches for proper assembly.

9. After making electrical connections, spliced conductors should be turned upward and pushed carefully up into the outlet box. The wires should be spread apart with the grounded conductor and the equipment-grounding conductor on one side of the outlet box.

10. All set screws must be checked and retightened where necessary before installation.

WARNING: To reduce the risk of personal injury, do not bend the blade brackets (also referred to as flanges) during assembly or after installation. Do not insert objects in the path of the blades.

WARNING: Remove the rubber motor stops on the bottom of the fan before installing the blades or testing the motor.

WARNING: To reduce the risk or fire or electric shock, do not use this fan with any solid-state speed control device.

WARNING: To avoid possible electric shock, turn the electricity off at the main fuse box before wiring. If you feel you do not have enough electrical wiring knowledge or experience, contact a licensed electrician.

WARNING: Electrical diagrams are for reference only. Optional use of any light kit shall be UL-listed and marked suitable for use with this fan.

WARNING: To reduce the risk or fire, electric shock, or personal injury, mount to outlet box marked" Acceptable for fan support of 35 lbs.(15.9 kg) or less" and use the screws provided with the outlet box.

F6305BKQ110V

Installation & Operating Instructions for the
Parrotuncle Owner's Installation, Manual

WARNING: SHUT POWER OFF AT FUSE OR CIRCUIT BERAKER

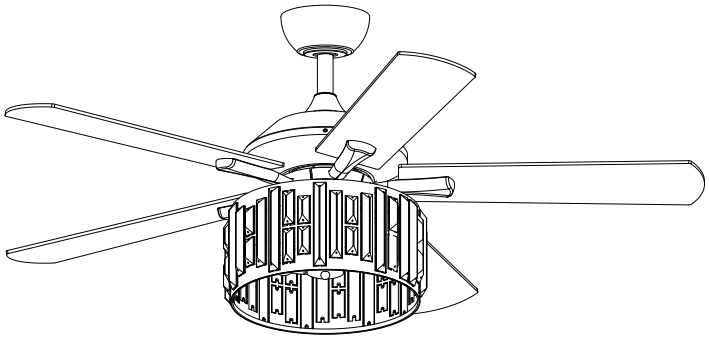

THANK YOU FOR YOUR PURCHASE

Thank you for purchasing this quality product. To ensure correct function and safety, please read and save all instructions before using the product.

SAFETY TIP

1. To avoid possible electric shock, turn off the electricity at the main fuse box or circuit panel before you begin the fan installation or before servicing the fan or installing accessories.

2. Read all instructions and safety information carefully before installing your fan and save these instructions.

3. Make sure all electrical connections comply with local codes or ordinances and the National Electrical Code. If you are unfamiliar with electric wiring, please use a qualified and licensed electrician.

4. Make sure you have a location selected for your fan that allow clear space for the blades to rotate, and at least seven(7) feet of clearance between the floor and the fan blade tips. The fan should be mounted at least thirty (30) inches from walls or other up right structures.

5.WARNING: The outlet box and ceiling support joist used must be securely mounted, and capable of supporting at least 100 pounds. To reduce the risk of fire, electric shock or personal injury, mount to the outlet box marked acceptable for fan supported and use mounting screws provided with the outlet box. The box must be supported directly by the building structure.

6. WARNING: To reduce the risk of fire, electric shock or personal injuy, mount to outlet box marked "acceptable for fan support" and use mounting screws provided with the outlet box most outlet boxes commonly used for the support of lighting fixtures are not acceptable for fan support and may need to be replaced. Consulta qualified electrician if in doubt.

7. Electrical diagrams are for reference only. Light kits that are not packed with the fan must UL listed and marked suitable for use with the model fan you are installing. Switches must be UL. general use switches. Refer to the instructions packaged with the light kits and switches for proper assembly.

8. After installation is complete, check that all connections are absolutely secure.

9. After making electrical connections, spliced conductors should be turned upward and pushed carefully up into outlet box. The wires should be spread apart with the grounded conductor and the equipment-grounding conductor on one side of the outlet box.

10. WARNING: To reduce the risk of electrical shock and fire, do not use this fan with any solid-state fan speed control device, or rheostat.

11. Do not separate the reverse switch until the fan has come to a complete stop.

12. Do not insert anything into the fan blades while they are rotating.

13. WARNING: To reduce the risk of personal injury, do not bend the blade brackets (also referred to as "flanges") during assembly or after installation.
Do not insert objects in the path of the blades.

14. To avoid personal injury or damage to the fan and other items, be cautious when working around or cleaning the fan.

15. Do not use water or detergent when cleaning the fan or fan bades. A dry dust cloth or lightly dampened cloth will be suitable for most cleaning.

NOTE: The important safety precautions and instructions appearing in the manual are not meant to cover all possible conditions and situations that may occur. It must be understand that common sense and caution are necessary factors in the installation and operation and operation of this fan.

NOTE: This productis not intended for use by persons (including children) with reduced physical, sensory or mental capabilities are different or are impaired, or lack of experience or knowledge, unless such persons are supervised or trained to operate the appliance by a person responsible for their safety.

NOTE: Children should be supervised to ensure that they do not use appliances as a toy.

TECHNICAL INFORMATION

SKU#	Rated Voltage	Rated Power (motor)	Light
F6305BKQ110V	110-120 VAC	26W±5W	2*E26 Bulb MAX.25W (not included)

F6305BKQ110V

Installation & Operating Instructions for the
Parrotuncle Owner's Installation, Manual

WARNING: SHUT POWER OFF AT FUSE OR CIRCUIT BERAKER

Wood screws (4PCS)

Plastic wire nut (4PCS)

Blade bracket screws (1PCS)

Mounting screws (2PCS)

Washer (2PCS)

Spring washer (2PCS)

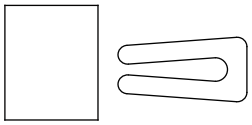

Balanced parts package (1PCS)

Blade screw (16PCS)

Blade washer (16PCS)

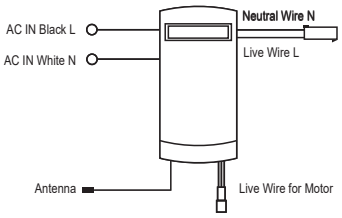

Remote control (1PCS)

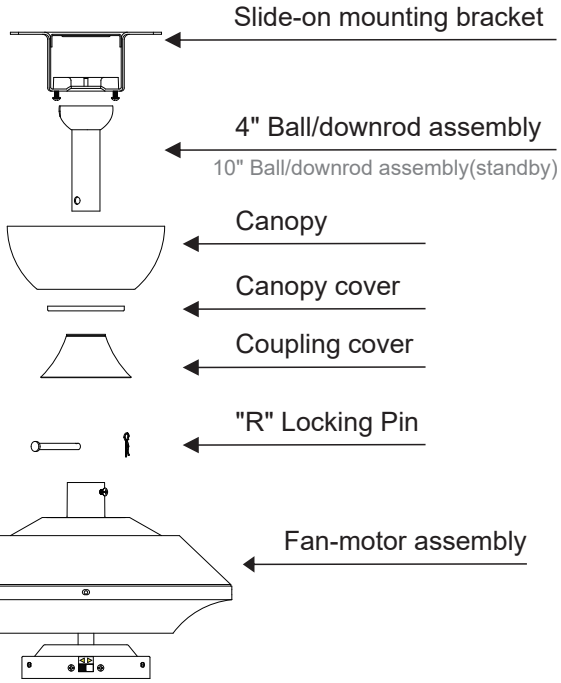

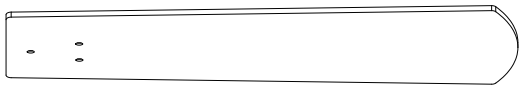

Blade (5PCS)

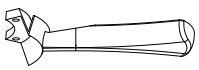

Blade bracket (5PCS)

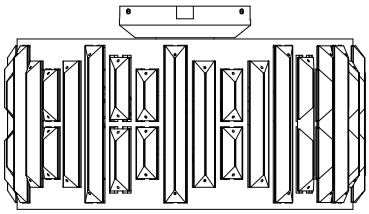

Light kit

Pls check whether above accessories are completed or not? Yes, and install.

F6305BKQ110V

Installation & Operating Instructions for the
Parrotuncle Owner's Installation, Manual

WARNING: SHUT POWER OFF AT FUSE OR CIRCUIT BERAKER

1

Loose 2 screws of the mounting bracket under the canopy, removed the mounting bracket from the canopy.

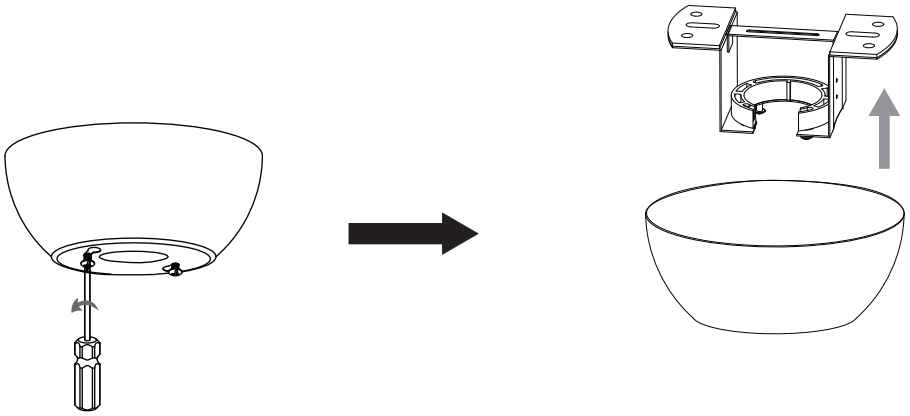

Phillips screwdriver

2

INSTALLING THE MOUNTING BRACKET:

The ceiling fan must be installed in a location so that the blades are 12” (300mm) spacing from the tip of the blade to the nearest objects or walls. When hanging the Fan REMEMBER to turn off the power. Follow the instruction below to hang your fan properly:

1. For wood ceiing, secure the mounting bracket to the ceiling is capable of carrying a load of at least 100lbs (45kgs) with two long mounting screws and washers provided. Be sure at least 0.12” (30mm) of the screw is threaded into the support.

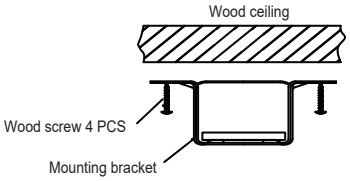

Note: Check whether it is securely installed.

2 .For installing to junction box, secure the junction box directly to the building structure. Use appropriate fasterners and building materials. The junction box and its support must be able to fully support the moving weight of the fan (at least 100lbs). Use a UL listed metal junction box (Not Included). Do not use a plastic junction box. Figure1 & 2 examples to mount the junction box (Not Included).

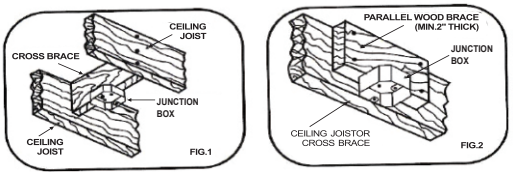

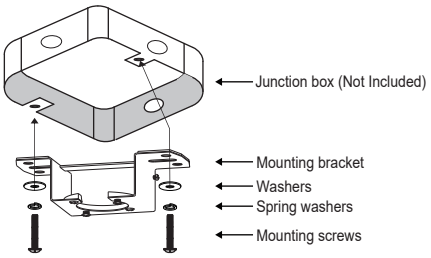

3

Use a Phillips screwdriver to loosen the screw in the direction of the arrow shown in the figure, and place the screw for subsequent installation.

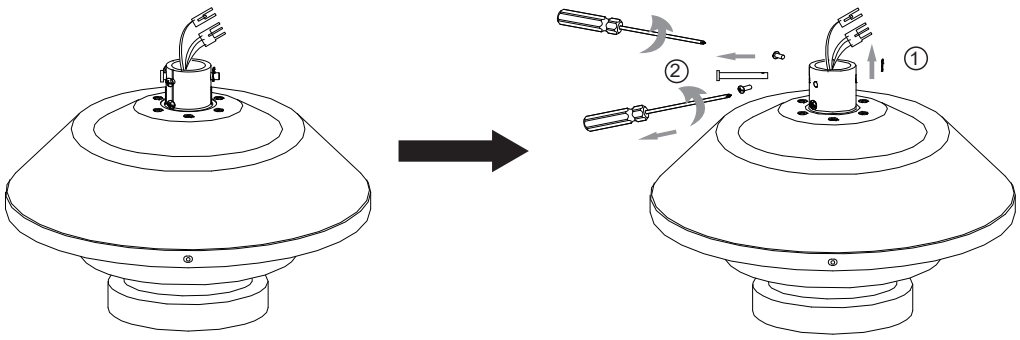

Phillips screwdriver

F6305BKQ110V

Installation & Operating Instructions for the
Parrotuncle Owner's Installation, Manual

WARNING: SHUT POWER OFF AT FUSE OR CIRCUIT BERAKER

4

Install the suspension system components of the product as shown in the diagram.

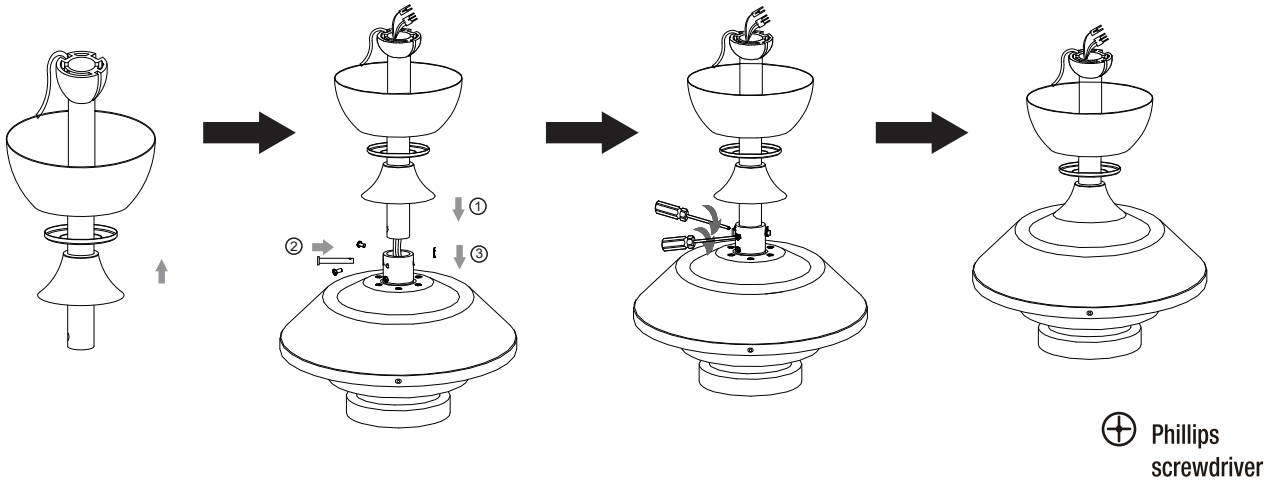

5

Carefully lift the fan motor assembly onto the mounting bracket that was attached to the outlet box. Turn the entire assembly until the check tab (stopper of bracket) drops into the notch of the downrod ball and seats firmly.

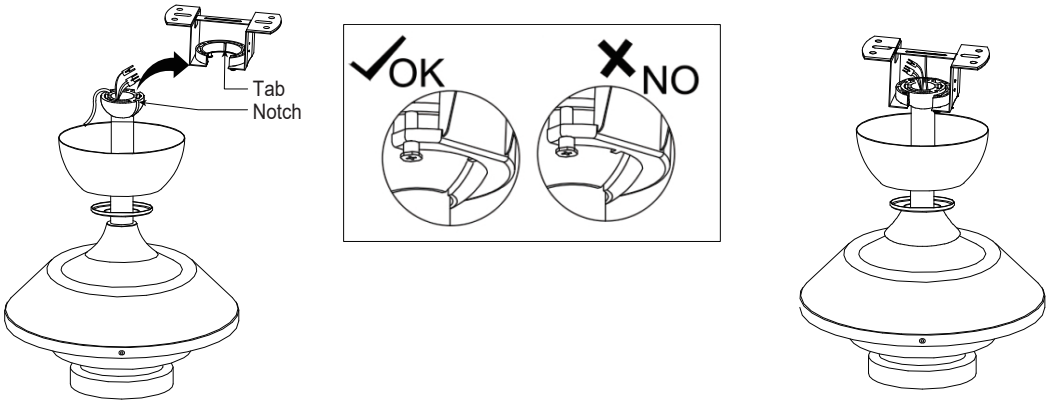

6

Connect the wires of the fan main unit with remote controller, connect the remote controller to the power supply using wire nuts.

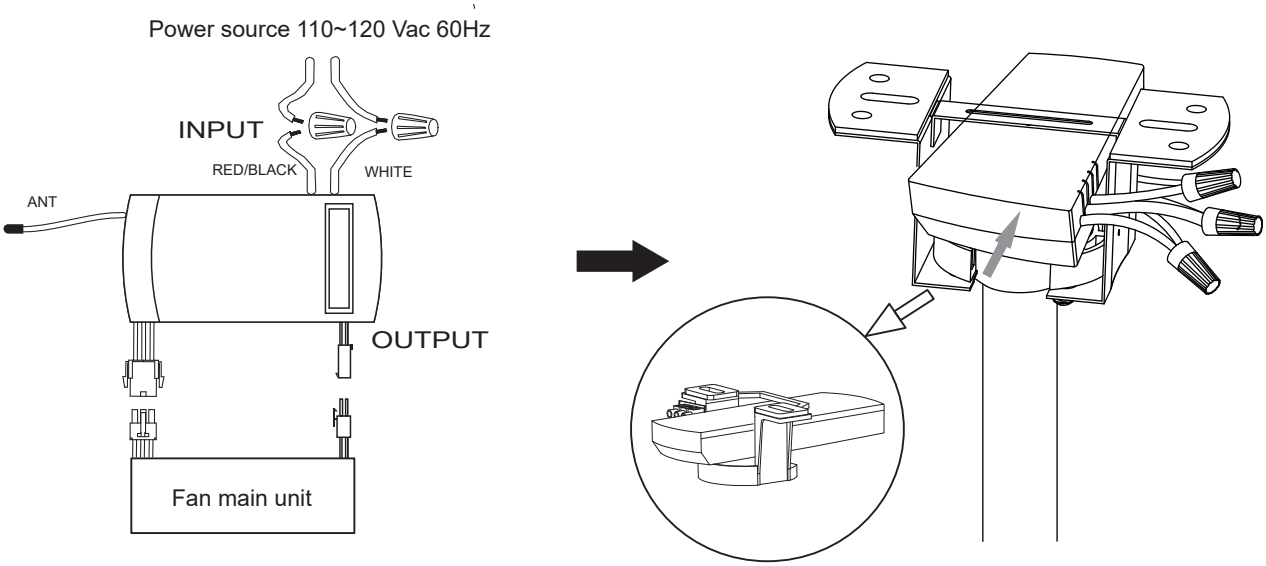

WARNING: SHUT POWER OFF AT FUSE OR CIRCUIT BERAKER

7 Install the canopy to the screws of the mounting bracket, tighten the screws and cover the canopy cover.

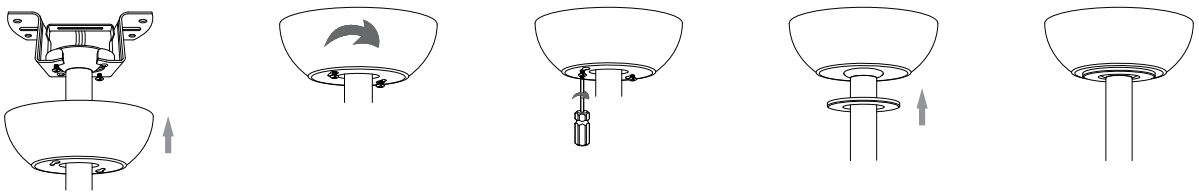

8 Attach the fan blade to the fan blade bracket using the blade screws and washers provided, tighten them firmly. Complete 5 blades assembly.

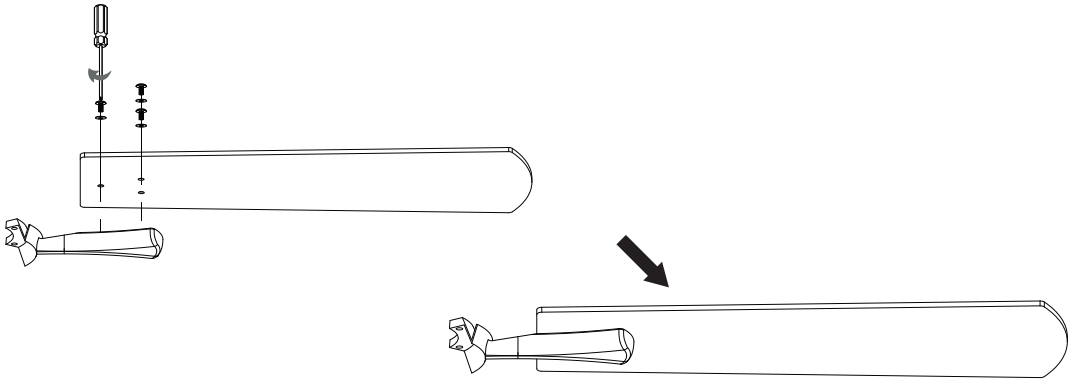

⊕ Phillips screwdriver

9 Remove 10 screws from the motor assembly, place the screws for subsequent.

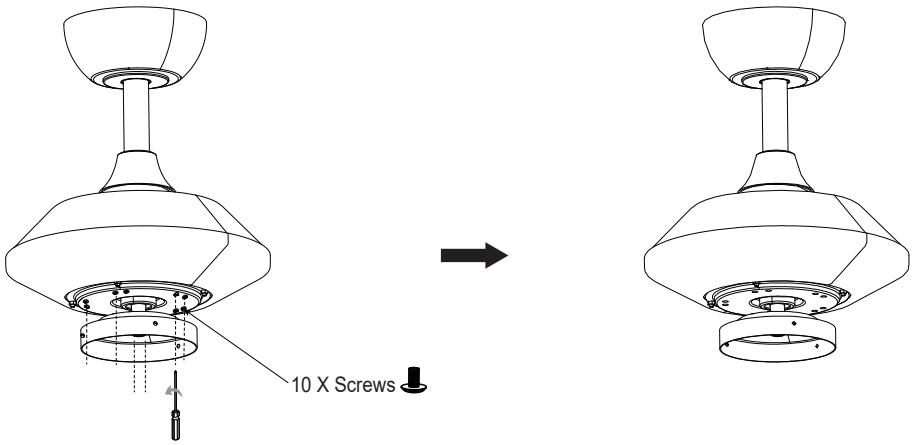

10 Attach the blade assembly to the fan motor assembly using removed screws and tighten firmly.

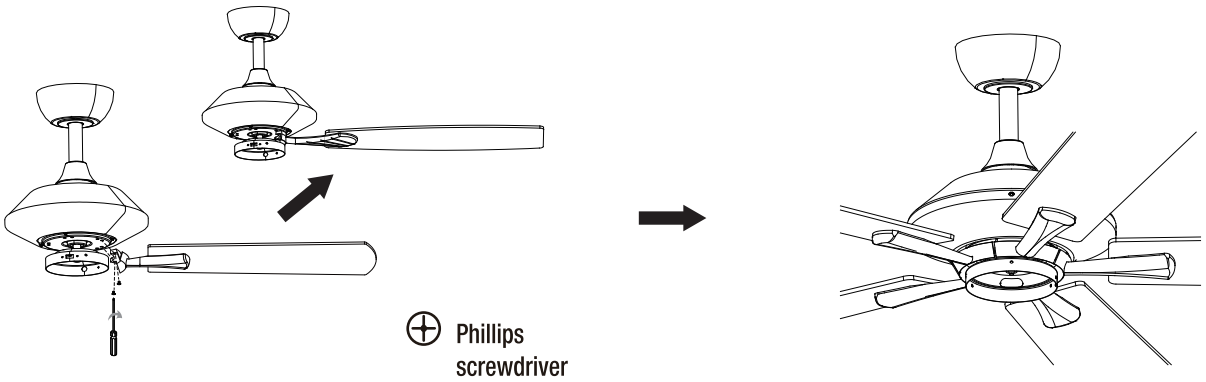

⊕ Phillips screwdriver

Parrot Uncle

F6305BKQ110V

Installation & Operating Instructions for the
Parrotuncle Owner's Installation, Manual

WARNING: SHUT POWER OFF AT FUSE OR CIRCUIT BERAKER

11 Remove 3 screws from motor assembly.

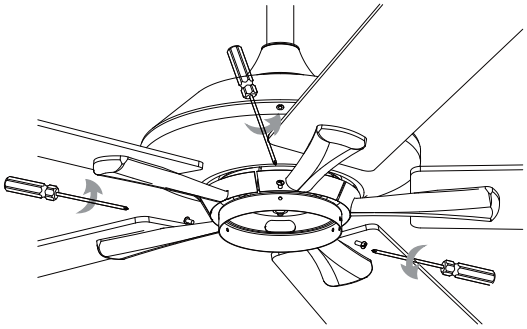

⊕ Phillips screwdriver

12 Connect the wires of the fan motor assembly with light fixture of light kit.

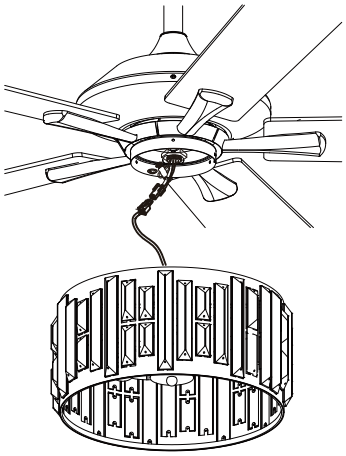

13 Attach the light kit to the fan motor assembly using removed 3 screws and tighten firmly.

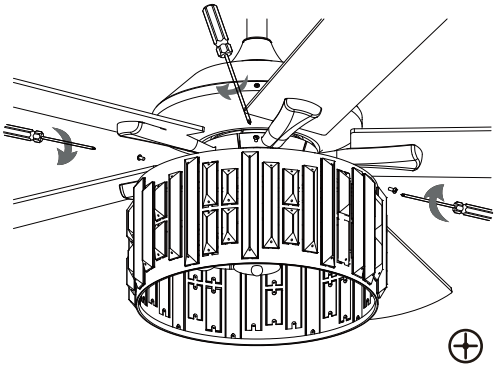

⊕ Phillips screwdriver

14 Install 2 E12 bulbs (not included) to the light fixture of the light kit.

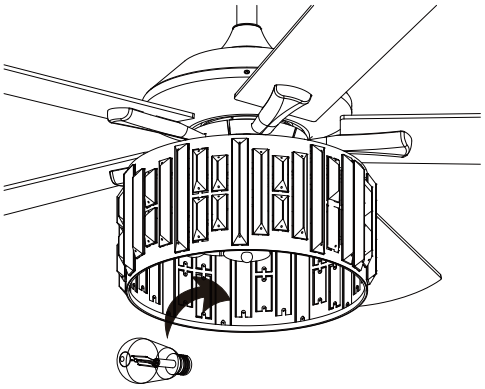

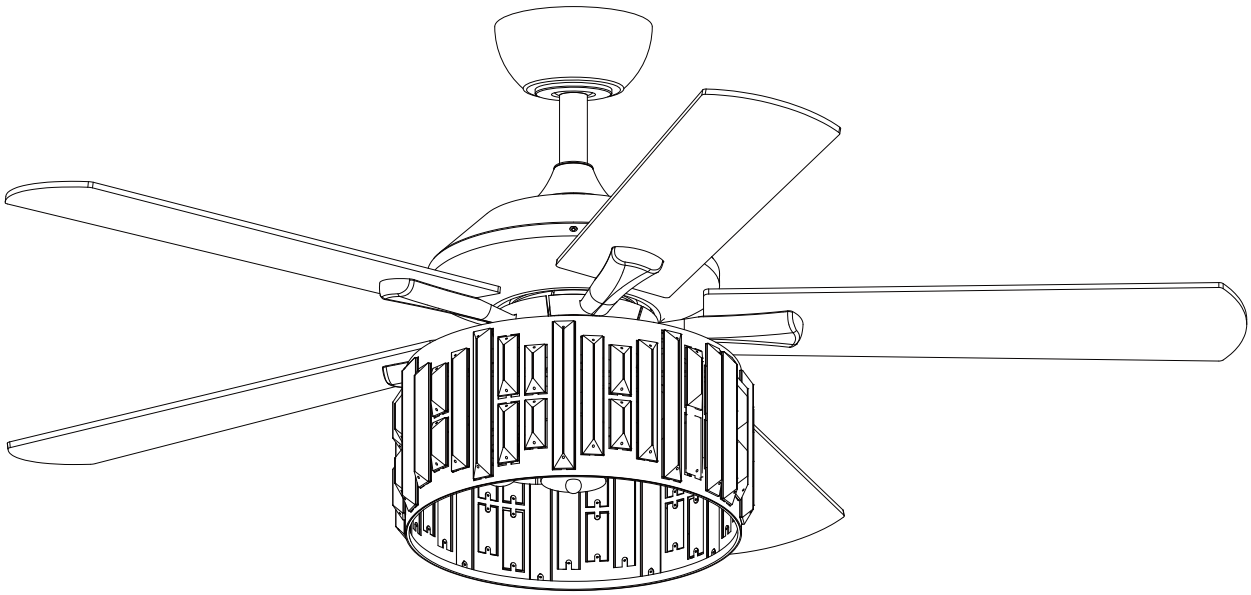

Finish

F6305BKQ110V

Installation & Operating Instructions for the
Parrotuncle Owner's Installation, Manual

WARNING: SHUT POWER OFF AT FUSE OR CIRCUIT BERAKER

Remote controller

INSTRUCTION OF INSTALLATION AND OPERATION

1. INSTALLING RECEIVER IN CEILING FAN

A. Safety precautions:

WARNING: HIGH VOLTAGE! Disconnect power by removing fuse or switching off circuit breaker.
Do not use with solid state fans.
Electrical wire must meet all local and national electrical code requirements.
Supply for fan must be 110/120 volt, 60Hz. 3.5A
Maximumfan motor amps: 1.0, Maximum light watts:180 incandescent or ballast and LED.
Otherwise power can cause serious injury or death.

B. Installing receiver in fan: (FIG.2)

a. Remove power from the circuit.
b. Remove ceiling fan canopy from the mounting bracket.
c. Disconnect existing wiring between ceiling fan and Supply in electrical junction box.
d. Make connections as follows, using the wire nuts supplied: (FIG.1)

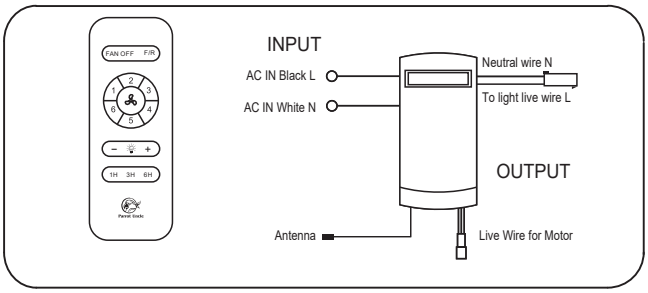

CAUTION: Ceiling Angle Shall Not Exceed 30 Degrees, For Mounting Controller.

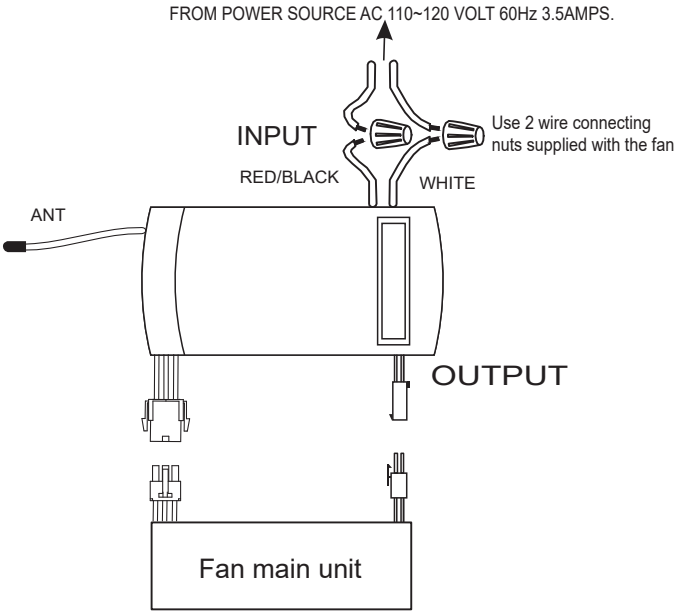

FIG.1

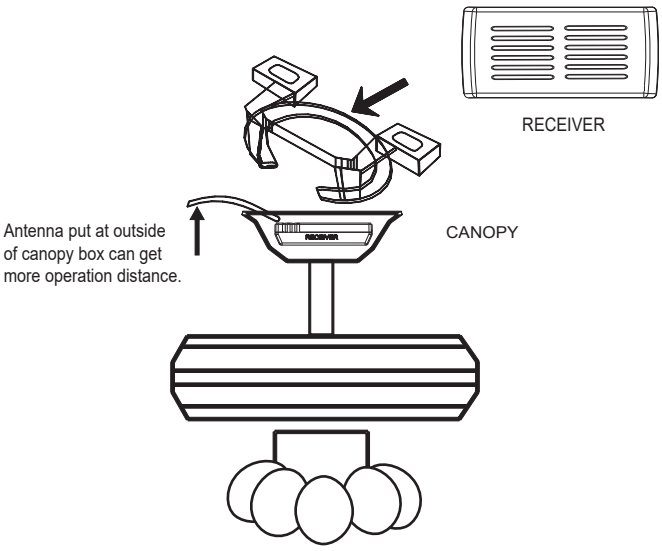

FIG.2

If other fans or supply wires are different color, have this unit installed by qualified licensed electrician.
a. Push all connected wires up into junction box.
b. Lay the brown antenna wire on top of the receiver, and put the receiver into the mounting bracket.
c. Reinstall the canopy on the mounting bracket.
d. Restore power.
e. Install 2 AAA 1.5 volt battery. (To prevent damage to transmitter, remove the battery if not used for a long time).
f. Store the transmitter away from excessive heat or humidity.

F6305BKQ110V

Installation & Operating Instructions for the
Parrotuncle Owner's Installation, Manual

WARNING: SHUT POWER OFF AT FUSE OR CIRCUIT BERAKER

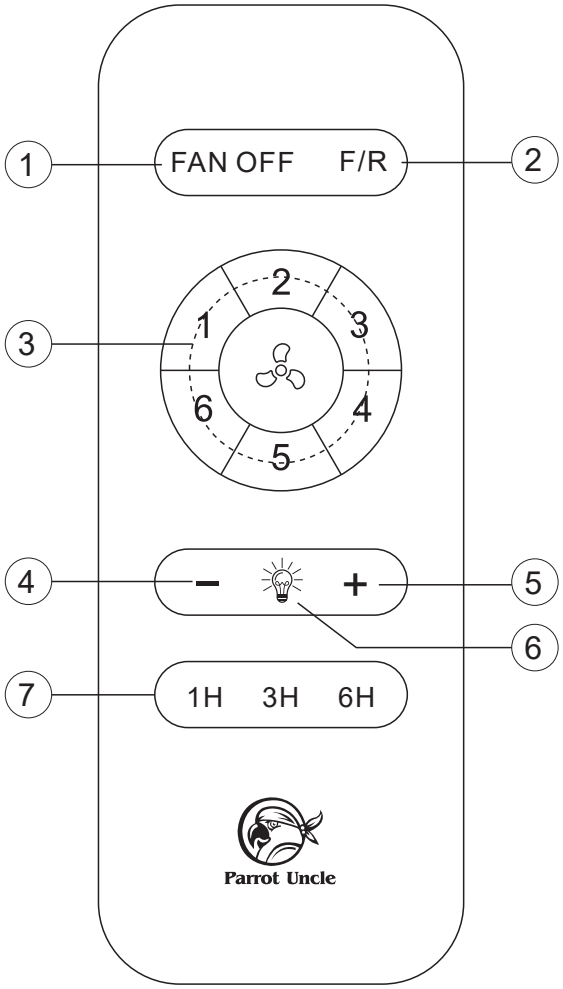

Actual use shall be subject to the real product

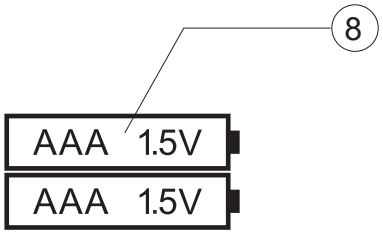

1. Fan Power Switch
2. Fan Forward and Reverse
3. Speed Controller
4. LED -
5. LED +
6. Light Switch
7. Timer
8. 2 X1.5V AAA Battery

Learning method of remote control:

Power on the receiver, press the “FAN OFF” key on the transmitter for more than 2 seconds, then hearing the “DI” sound, the learning is successful.
Note: The remote control has completed the pairing steps before packing in the factory and it can be used directly after the installation. You need to repair when you need to add or replace a new remote control.

- RF wireless digital transmission technology is adopted to realize the one-to-one control providing a rate of coincident code less than 1/50000. Same code number is attached to the back of the emitter and the receiver. It is required to return a pair of the same code number of emitter / receiver to the manufacturer for repair service in case of any damage.
- In a sufficient space, you can use the receiver at any angle, no worry about the direction.

NOTICES

1. When the emitter is unable to remotely control the receiver, please check whether the switch batteries are in good contact, whether they are fixed properly and whether they run out of use.
2. When the emitter is unable to remotely control the receiver, please check whether there is other remote control products around the space and check whether the keys are pressed down, because same nature of remote control product may cause interference with each other resulting in poor receiving effect. Taking away such articles will normalize the remote control function. (the infrared remote controller is not included).
3. Please use this product under applicable voltage. Too low voltage will lead to failure of the remote controller to work (Please refer to the product label for the voltage range and related parameters).
4. Please take out the batteries if you will no use this product for a long time.

WARNING: SHUT POWER OFF AT FUSE OR CIRCUIT BERAKER

PRODUCT SIZE

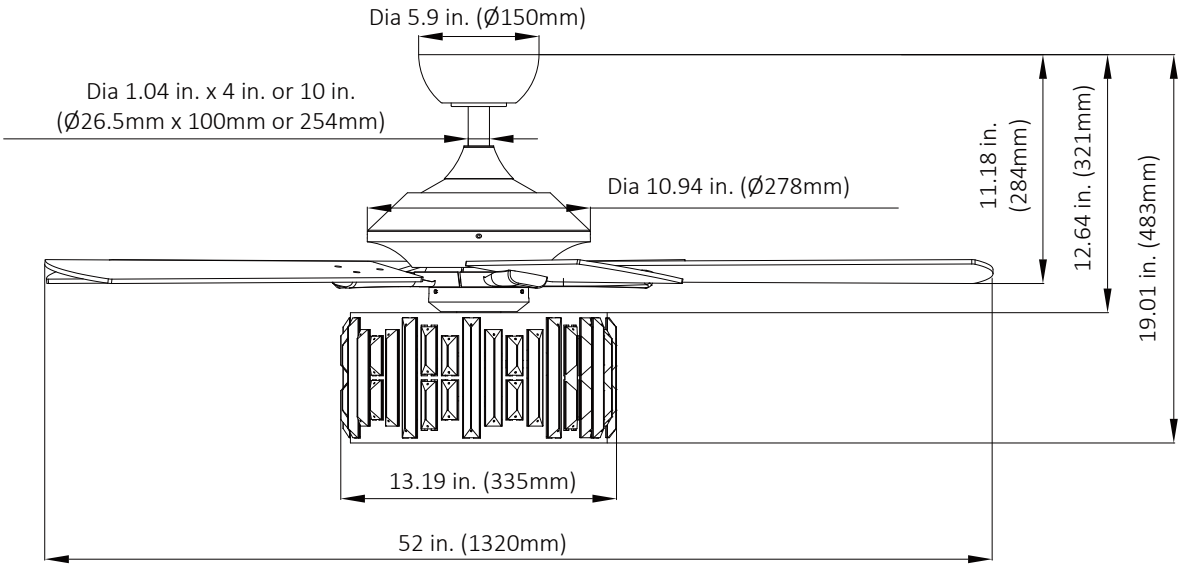

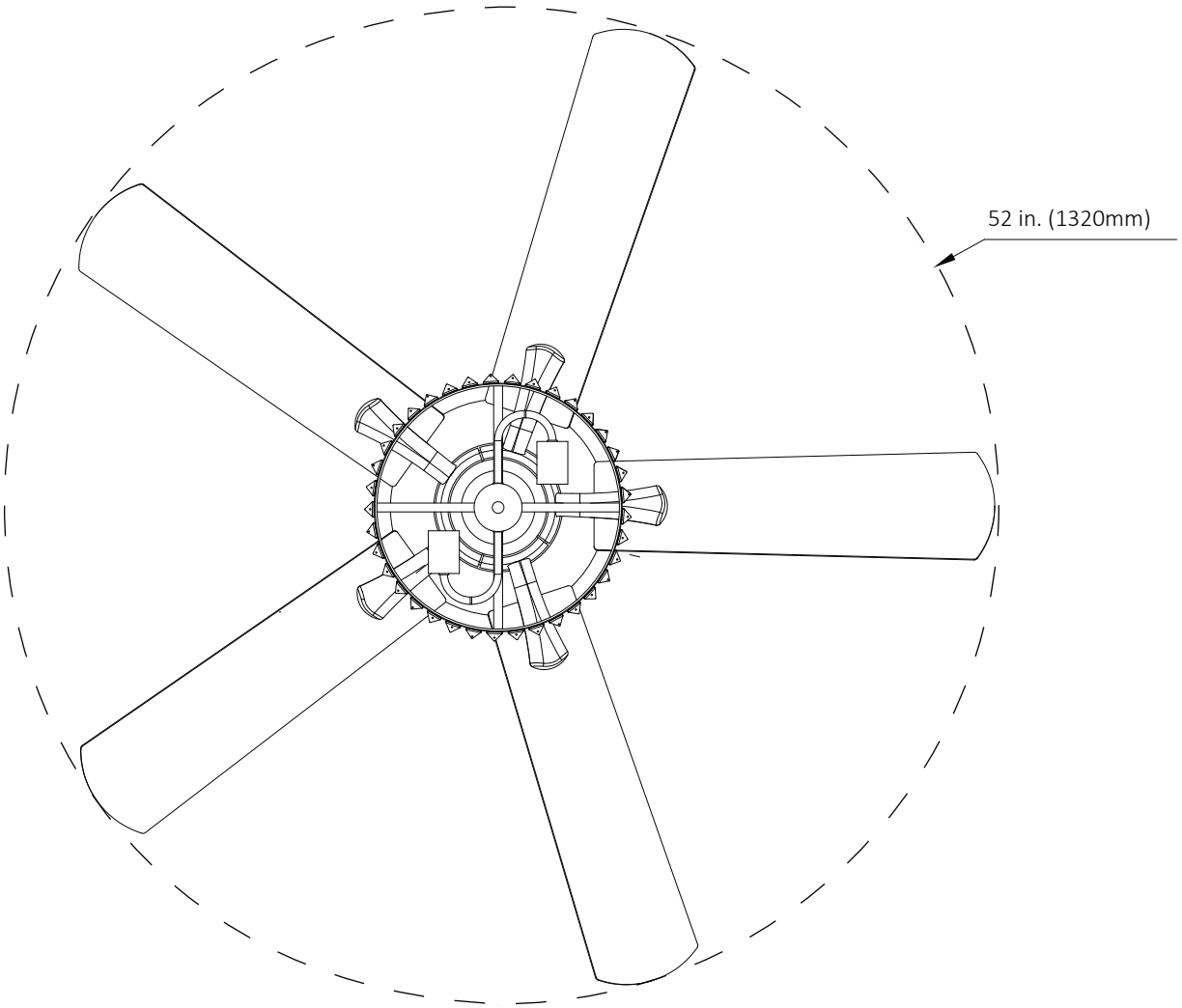

WARNING: SHUT POWER OFF AT FUSE OR CIRCUIT BERAKER

TROUBLESHOOTING GUIDE

Table of Contents

1. Fan / Remote is not working
2. Fan is noisy
3. Fan Wobbles
4. Light is not working

Please refer to the instruction sheet for detailed directions and descriptions of installation steps and requirements

1. FAN / REMOTE IS NOT WORKING

Ensure the remote is within the 20 feet range of the receiver
To reset the remote control: 1) Turn off power to fan using the wall switch or circuit breaker. 2) Remove batteries from remote. 3) Wait 10 seconds. 4) Replace batteries and turn power on
Check batteries to insure they are good and oriented correctly
Check to make sure the frequency switches (DIP Switches) from the remote to the receiver are set to the same frequency
Check the main and branch circuit fuses or breakers
If using a Variable Speed Wall Switch, ensure it is specifically designed for use with a ceiling fan.
Check the line wire connections to the fan and the switch wire connections in the switch housing per the instructions
If fan still does not work, please contact Customer Service **Support@parrotuncle.com**

2. THE FAN IS NOISY

Make sure all motor housing screws are tightened
Make sure the screws that attach fan blade to motor are tight
Make sure the wire nut connectors are not rattling against each other or the interior wall of the switch housing
Allow 24-hour break in period. Most noises associated with the new fan may disappear during this time
If using a ceiling light kit, make sure the glassware is secured tightly
Make sure there is a short distance/gap from the ceiling to the top of the canopy. The canopy should not touch the ceiling!
Make sure your ceiling box is secure and that the rubber isolator pads are used between the mounting bracket and outlet box

3. THE FAN WOBBLES

Verify all blades and blade bracket screws are secure (most fan wobble problems are caused by loose parts). Once fan is properly installed, run the ceiling fan for 10 minutes to let the fan self-adjust.
If wobble occurs after running the fan for 10 minutes, verify blade level using the following process: a) select a point on the ceiling above the tip of one of the blades. Then select the fan blade and measure from the center of the selected blade to point on the ceiling. Rotate the fan until the next blade is positioned and repeat the measurement using the same point from the ceiling for every blade. Measurements should be within 1/8 inch. b) If all deviation are less than 1/8 inch and the fan continues to wobble, please contact Customer Service **Support@parrotuncle.com** to order a complimentary Blade Balancing Kit
- If all deviations are less than 1/8 inch and the fan continues to wobble, please contact Customer Service **Support@parrotuncle.com** to order a complimentary Blade Balancing Kit

4. LIGHT IS NOT WORKING

Check Bulb to make sure it is installed correctly
Remove non-working bulb and replace with a bulb that is known to be a good working bulb
To reset the remote control: 1) Turn off power to fan using the wall switch or circuit breaker. 2) Remove batteries from remote. 3) Wait 10 seconds. 4) Replace batteries and turn power on

WARNING: SHUT POWER OFF AT FUSE OR CIRCUIT BERAKER

AFTER INSTALLATION

WOBBLE

The fan blades have been adjusted in the factory to minimize any wobble

NOTE: CEILING FANS TEND TO MOVE DURING OPERATION DUE TO THE FACT THAT THEY ARE MOUNTED ON A RUBBER CROMMET. IF THE FAN WAS MOUNTED RIGIDLY TO THE CEILING, IT WOULD CAUSE EXCESS VIBRATION. MOVEMENT OF A FEW CENTIMENTERS IS QUITE ACCEPTABLE AND DOES NOT SUGGEST ANY PROBLEM
TO REDUCE THE FAN WOBBLE, PLEASE CHECK THAT ALL SCREWS WHICH SECURED THE MOUNTING BRACKET AND DOWNROD ARE SECURE.

BALANCING A WOBBLING CEILING FAN

For your convenience, a Balancing Kit is included, please follow this procedure when balancing the fan:

1. Check that all blade and blade arm screws are secure.

2. Most fan wobbling problems are caused when blade levels are unequal. Check this level by selecting a point on the ceiling above the tip of one of the blades. Measure this distance. Rotate the fan until the next blade is positioned for measurement. Repeat for each blade. The distance deviation should be equal within 1/8"(0.32cm).

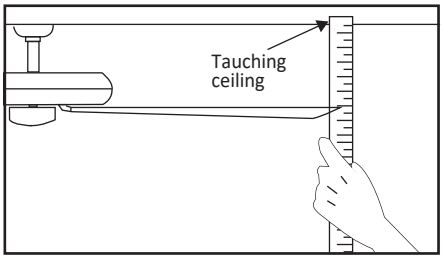

3. If the blade wobble is still noticeable, use the enclosed Blade Balancing Kit.

4. If the blade wobble is still noticeable, interchanging two adjacent (side by side) blades can redistribute the weight and possibly result in smoother operation.

WARNING: TO REDUCE THE RISK OF PERSONAL INJURY, DO NOT BEND THE BLADE ARM WHILE INSTALLING, BALANCING THE BLADES, OR CLEANING THE FAN. DO NOT INSERT FOREIGN OBJECTS BETWEEN ROTATING FAN BLADES.

NOISE
When it is quiet (especially at night) you may hear occasional small noises. This is normal. Please allowa 24-hour “breaking-in” period, most noises associated with a new fan disappear during the time.

CARE AND CLEANING
1. Periodic cleaning of your ceiling fan is the only maintenance required. Use a soft brush or lint free cloth to avoid scratching the paint finish. Please make sure to turn off electricity power before you clean your fan

2. Do not use water when cleaning your ceiling fan. It could damage the motor or the blades and create the possibility of an electrical shock.

3. Motor has permanently lubricated ball bearing. No need to oil

NOTE:
MAKE SURE THE POWER IS OFF AT THE ELECTRICAL PANEL BOX BEFORE YOU ATTEMPT ANY CLEANING OR REPAIRS.

Parrot Uncle