PFISTER

Courant™

Bridge Kitchen Faucet

F031-4COC Finish*(C)* ❑
F031-4COS Finish*(S)* ❑
F031-4COU Finish*(U)* ❑

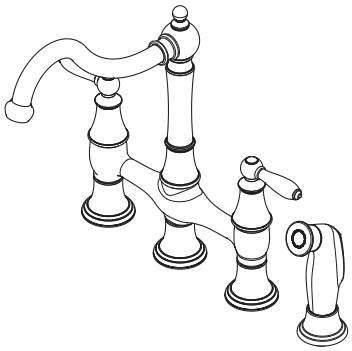

Specifications

Features

- 1.8 GPM Flow Rate
- 360º Rotating Spout
- High Arc Spout
- Optional Side Spray Included
- TiteSeal™ Putty Plates
- Pforever Seal Ceramic Disc Valves
- Pforever Warranty®

Code Compliance

Pfister products are designed and manufactured in compliance with the following standards and codes:

- IAPMO Certified To ASME A112.18.1 /CSA B125
- Certified to NSF 61/9 Annex G (Low lead)
- CEC Compliant
- CALGreen Compliant
- ADA Compliant-ANSI A117.1 (Lever handles only)
- ASME A112.18.3 (Backflow Prevention)

Dimensions

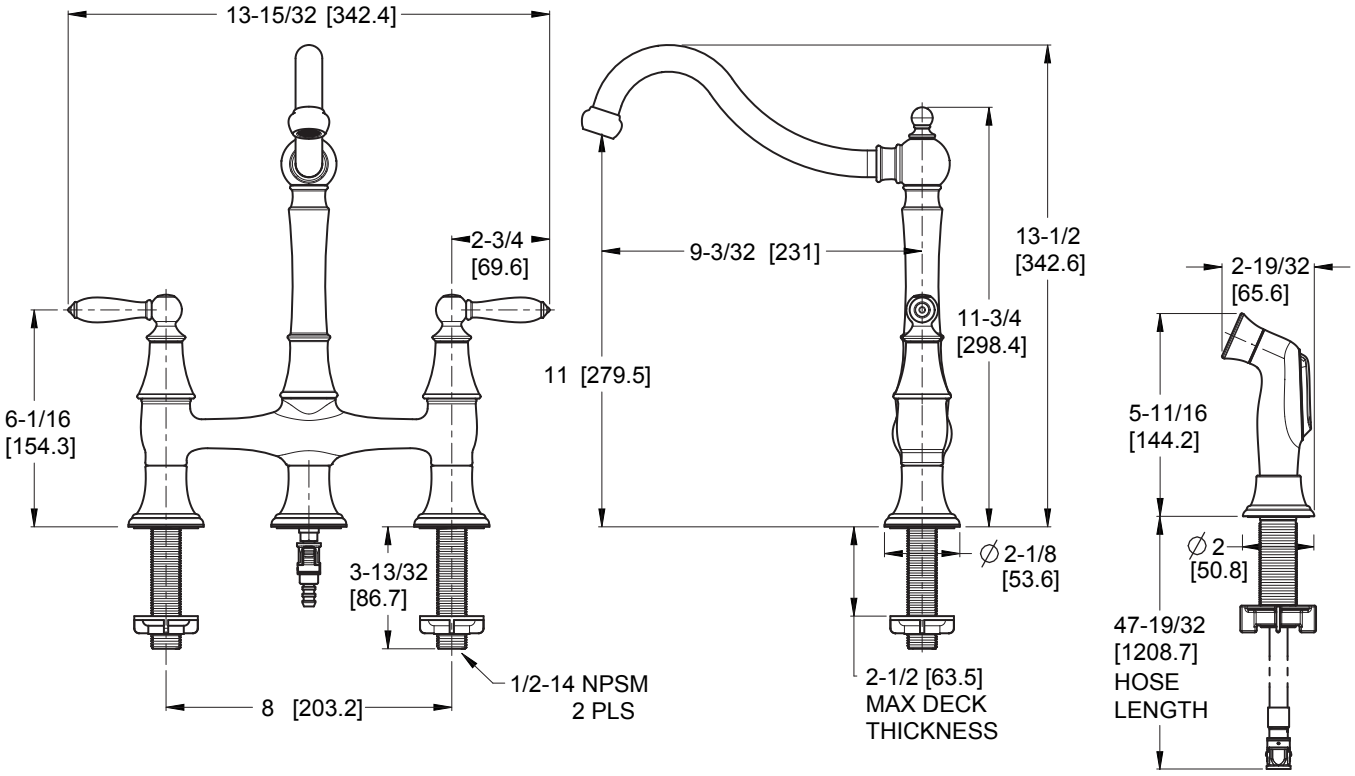

Ø1-3/8 Min to Ø1-1/2 Max. Deck Hole Openings

*supply lines not included
1/2" male OD connection at faucet

Copyright © 2021, Pfister Inc.