NO.7416 INSTALLATION INSTRUCTION

Please Scan the QR code to watch the installation video.
If you have any questions, please feel free to contact us through the order page.

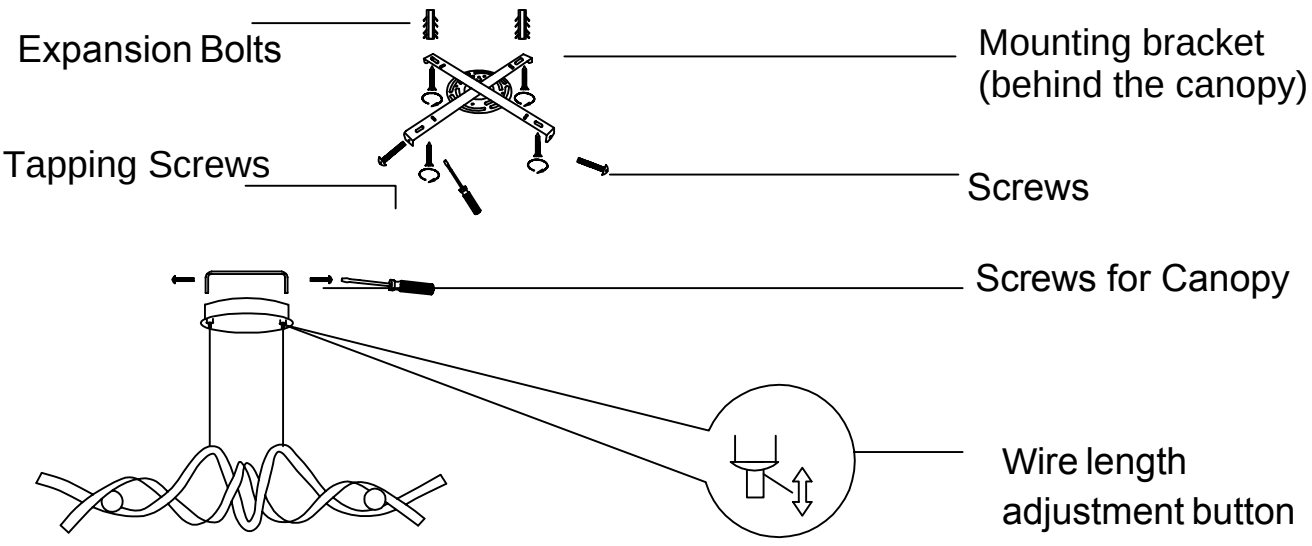

Black wire (or brown wire): Connect to live wire (L)

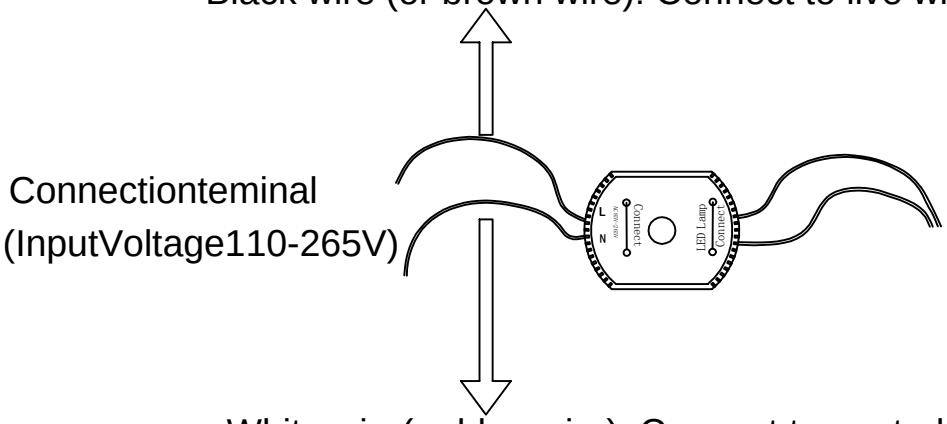

White wire(or blue wire): Connect to neutral wire(N)

Installation Steps:

1.Install the mounting bracket.
2. Remove the protective film from the surface of the light fixture. Avoid using knives or sharp tools to prevent scratching the fixture or damaging the wire insulation.
3. Adjust the hanging height as needed.
4. Test circuit: Connect the power wires with a temporary wire to test if the light is working properly before installing it to the ceiling.
5. Installation:Attach the lamp body to the mounting bracket, and connect the power wires with the connecting terminals.
6. Turn on the power and double-check; the installation is complete.

Installation Instructions

It is recommended that two individuals collaborate to ensure efficient assembly of components and optimal safety.

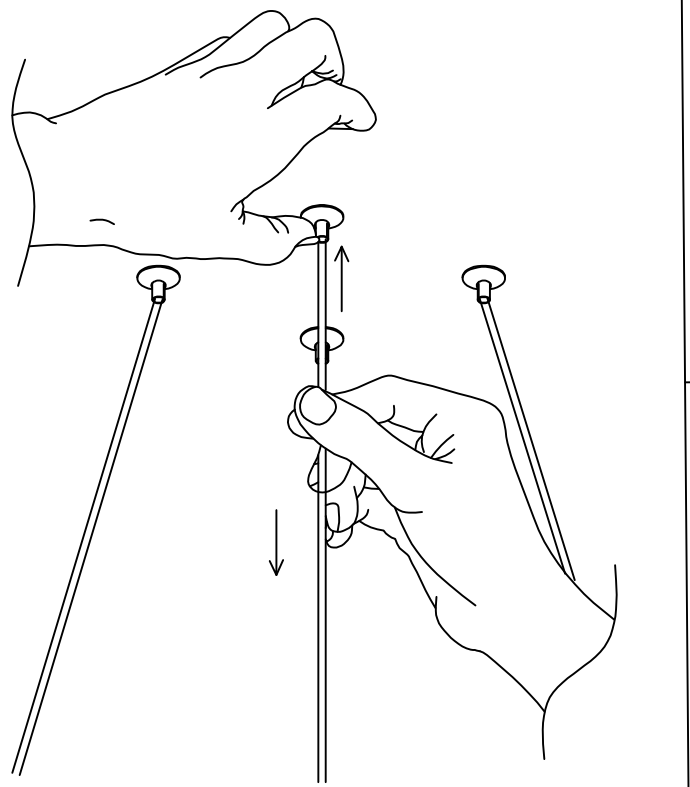

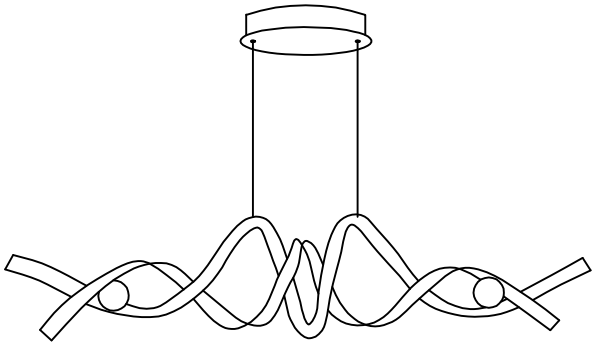

Adjusting the height of the light fixture:

While holding the button on the bottom of the canopy, pull the hanging wire downward or push it upward to adjust the length. Repeat this process for each hanging wire to adjust the height of the light fixture.

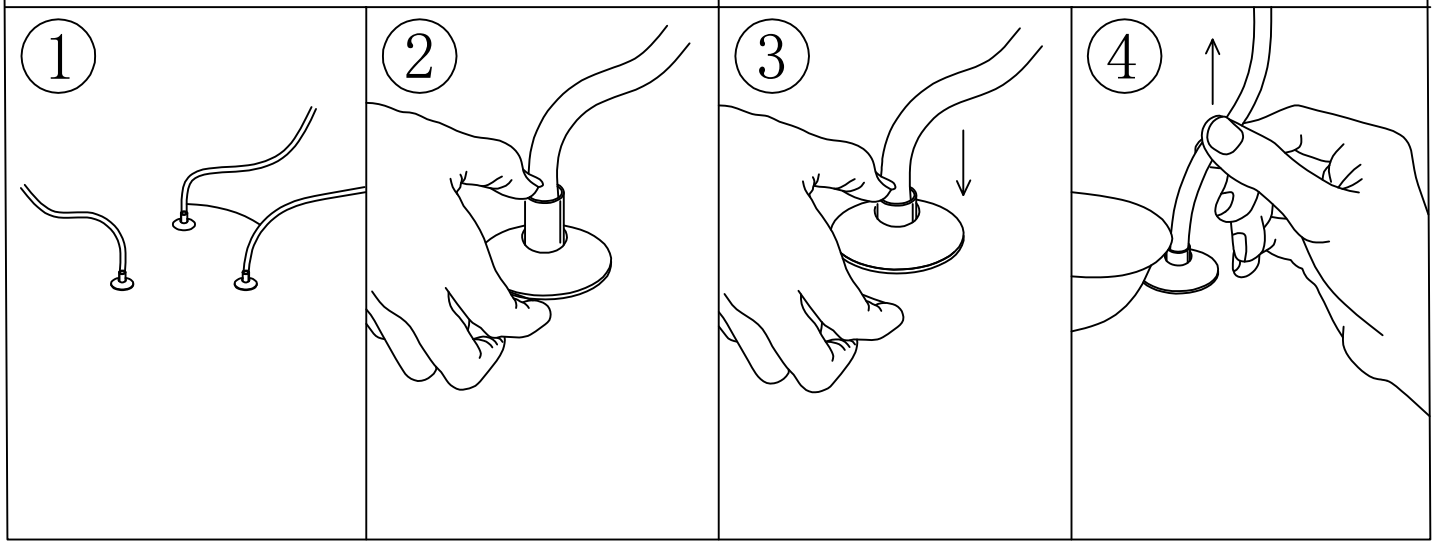

Note: Due to creasing from packaging, the suspension wires of the pendant lights require two weeks to gradually straighten after installation.

Warning!

1.Installation should be performed by a professional.
2.To prevent electric shock, please turn off the power before installing, repairing, or cleaning the light fixture.
3.This light fixture operates within a 110V to 265V range only.
4.Do not install the light fixture in damp conditions.
5.Keep the light fixture away from acidic and corrosive materials.