ASSEMBLY INSTRUCTIONS

332-48RD FIXED TOP ROUND DINING TABLE

A Table Top

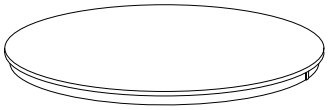

1 PC

B Leg



4 PCS

C Upper Crossbar

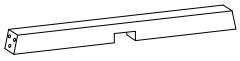

1 PC

D Lower Crossbar

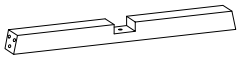

1 PC

E JCBC Bolt
M6 x 35mm

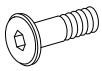

1 PC

F JCBC Bolt
M6 x 50mm

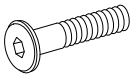

4 PCS

G JCBB Bolt
M8 x 60mm

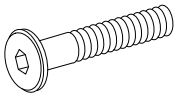

8 PCS

H Lock Washer
M6



1 PC

I Lock Washer
M8



8 PCS

J Flat Washer
M8

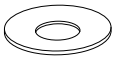

8 PCS

K PVC Dowel
M8 x 30mm

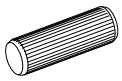

8 PCS

L Nylon Washer
M6



4 PCS

M Allen Wrench
M4 x 100mm



1 PC

N Allen Wrench
M5 x 60mm

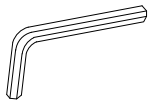

1 PC

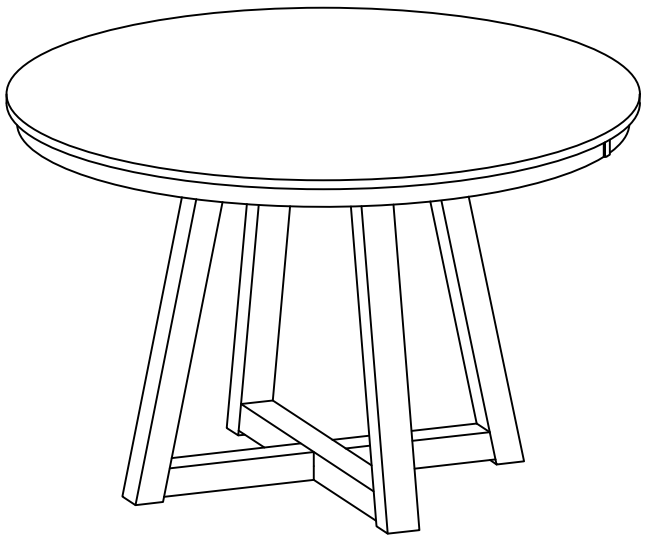

This page lists all the contents included in the box. Please take the time to identify the hardware as well as the individual components to this product.
As you unpack and prepare for assembly, place the contents on a carpeted or padded area to protect them from damage.

1 Insert PVC Dowel (K) into the pre-drilled holes of the Upper Crossbar (C) and the Lower Crossbar (D).

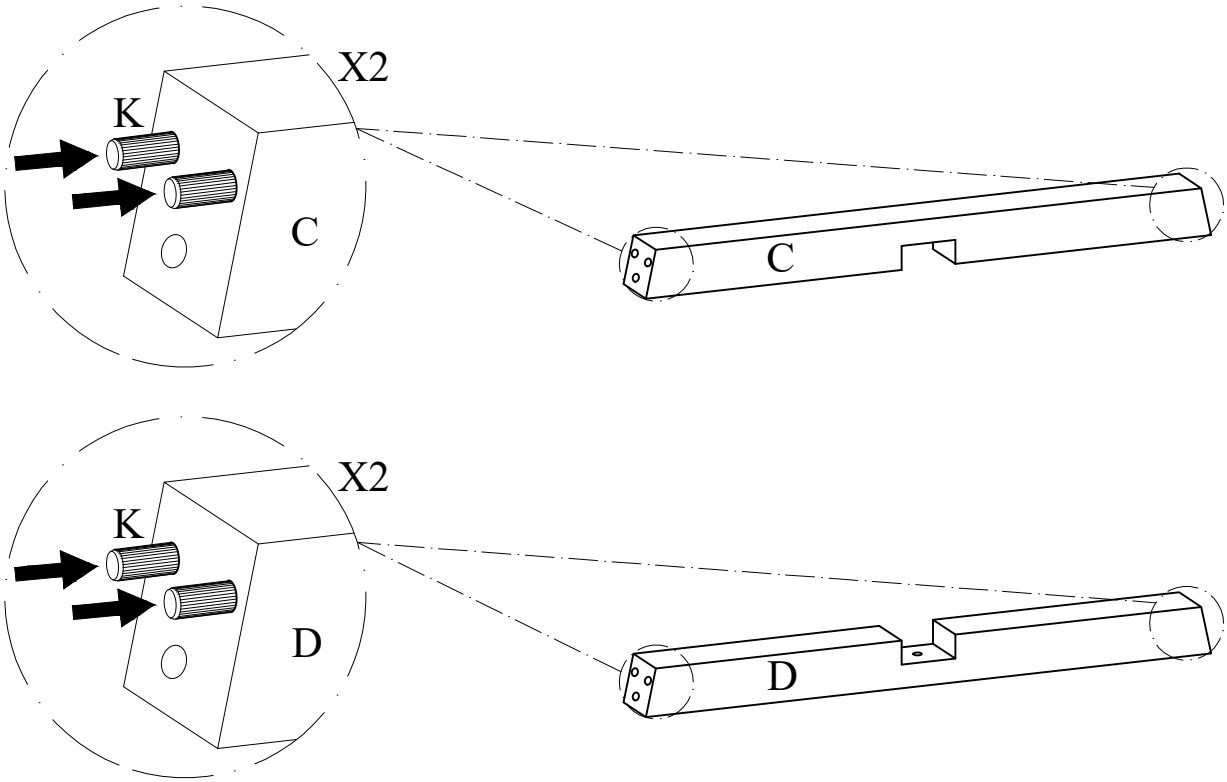

2 (i) Place the Table Top (A) upside down on an even surface. Attach the Leg (B) to the frame of the Table Top (A) using JCBB Bolt (G), Lock Washer (I) and Flat Washer (J) with the Allen Wrench (N).

(ii) Use PVC Dowel (K) as a guide to align and attach the Upper Crossbar (C) to the Leg (B) using JCBC Bolt (F) and Nylon Washer (L) with the Allen Wrench (M).

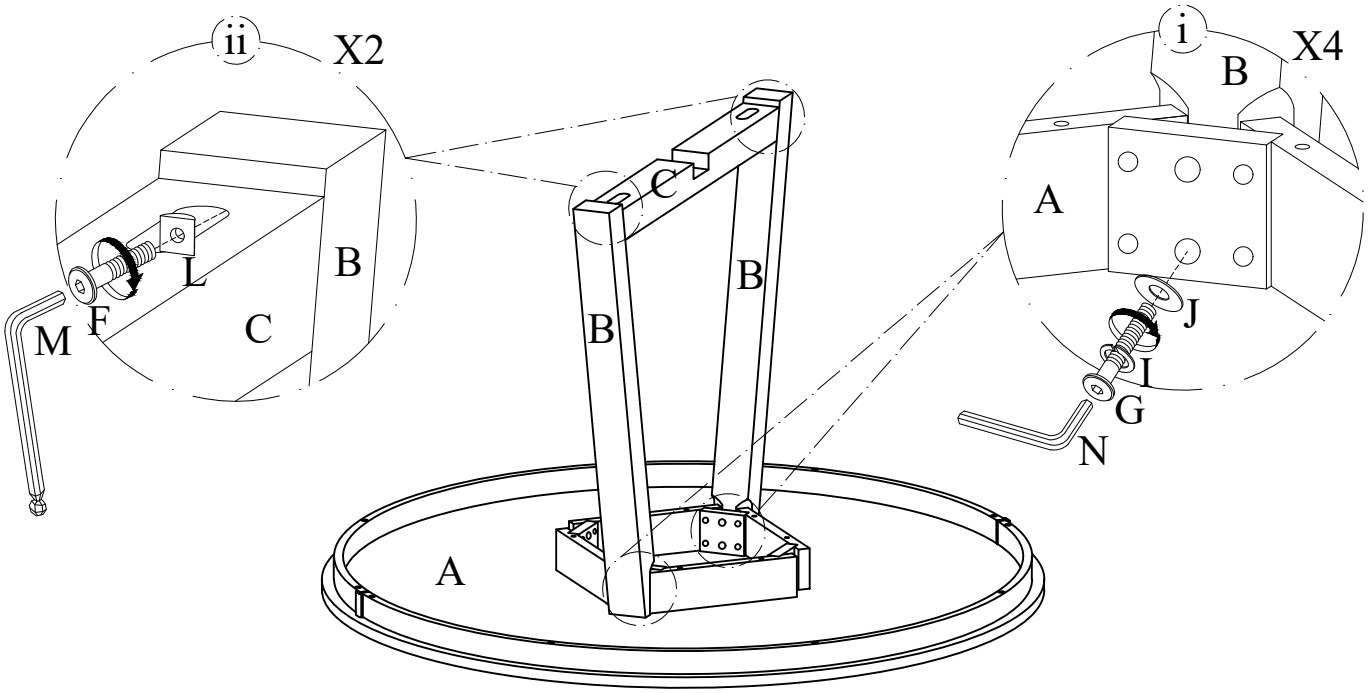

3 Slot the Lower Crossbar (D) into the Upper Crossbar (C).

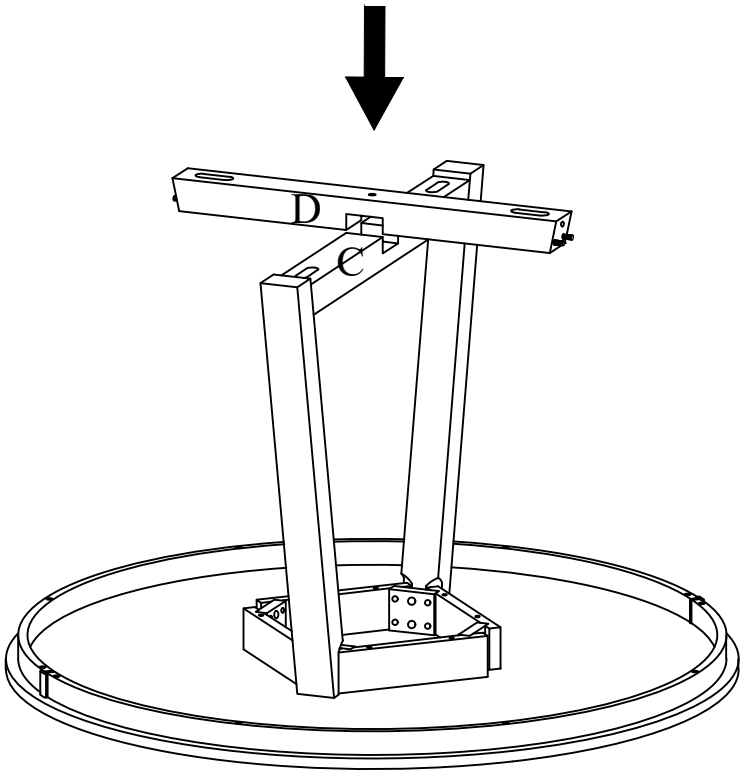

4 (i) Use PVC Dowel (K) as a guide to align and attach the Leg (B) to the Lower Crossbar (D) and the frame of the Table Top (A).

(ii) Secure the Leg (B) to the frame of the Table Top (A) using JCBB Bolt (G), Lock Washer (I) and Flat Washer (J) with the Allen Wrench (N).

(iii) Secure the Leg (B) to the Lower Crossbar (D) using JCBC Bolt (F) and Nylon Washer (L) with the Allen Wrench (M).

** **Do not fully tighten the bolts until all bolts are attached.**

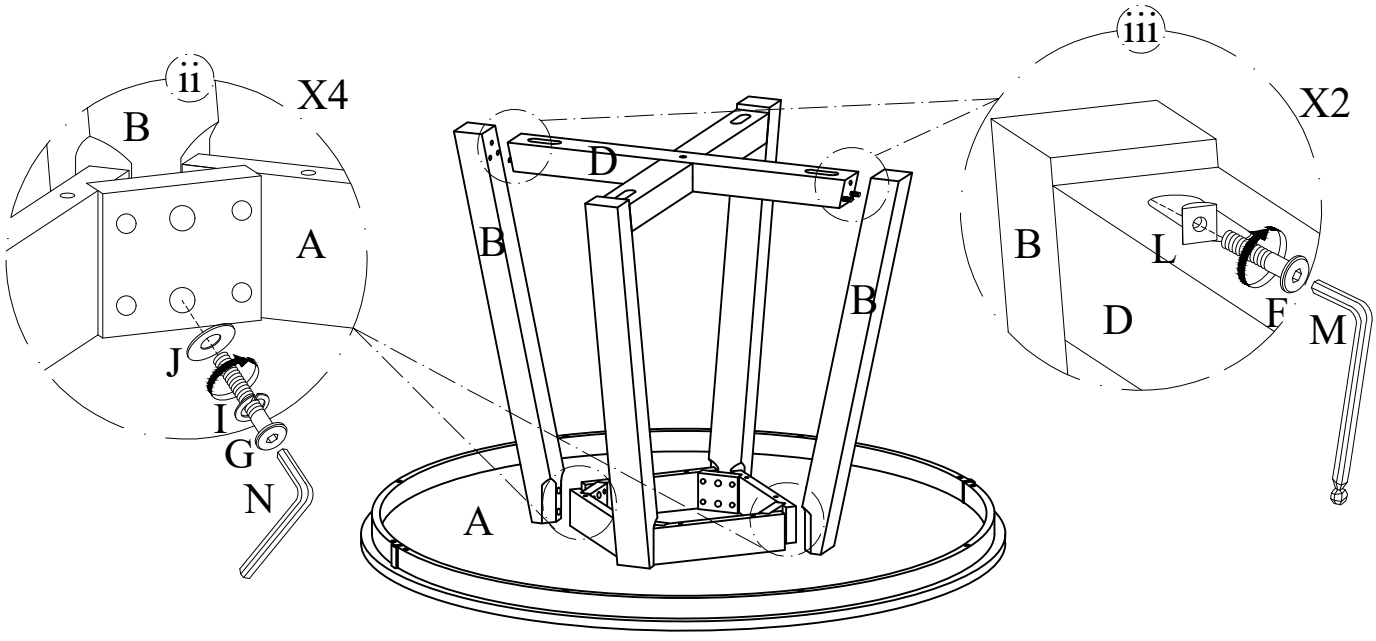

5 Secure the Lower Crossbar (D) to the Upper Crossbar (C) using JCBC Bolt (E) and Lock Washer (H) with the Allen Wrench (M).

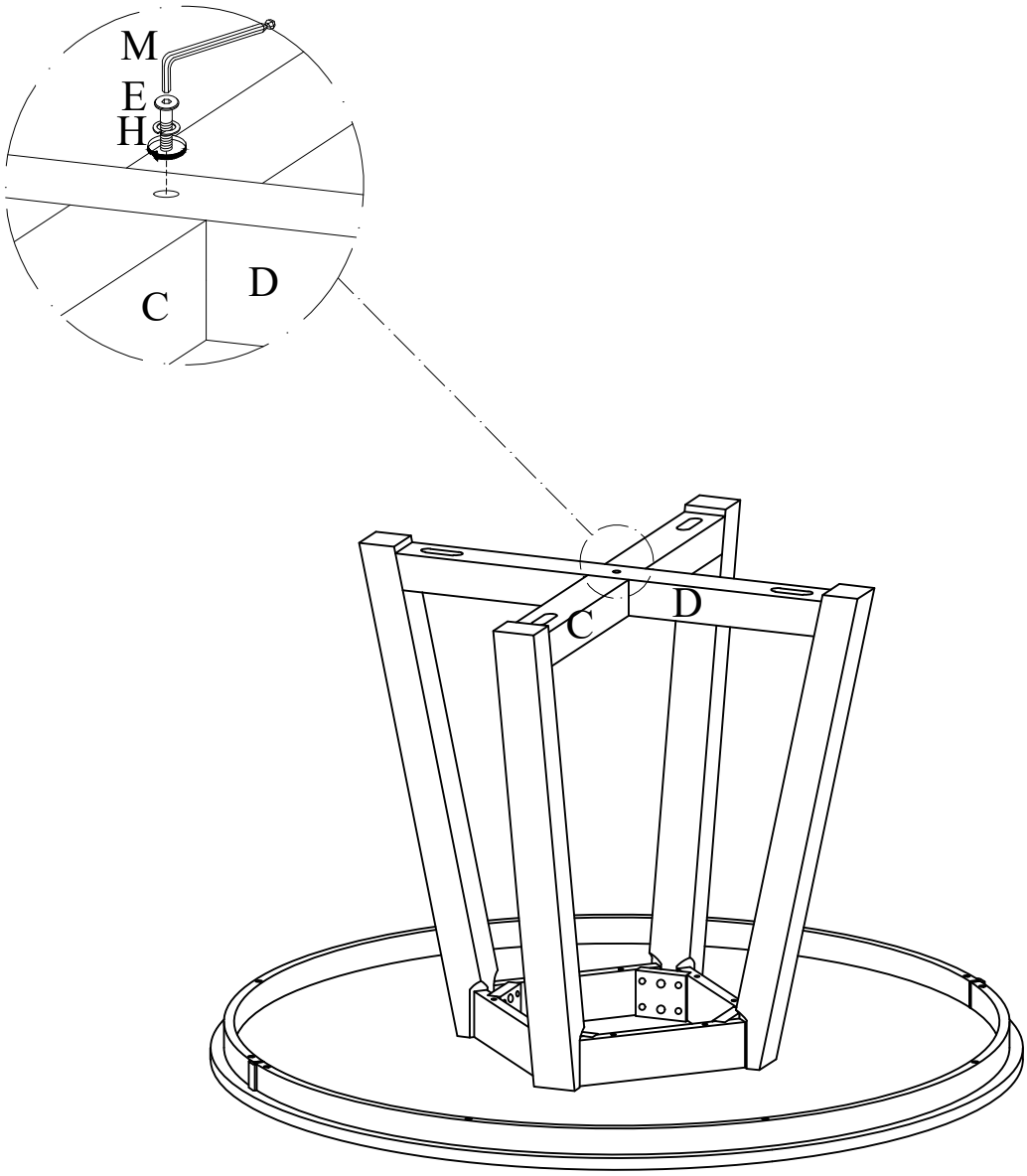

Cleaning & Care

Treat surfaces with care. Surfaces are resistant to scratches but are not scratch resistant. Clean surfaces with a dry or damp soft cloth. Do not use abrasive cleaners. Hardware may loosen over time. Periodically check that all connections are tight.