Statement® | K-26314

32" deluxe slidebar with integrated water supply

Features

- Coordinates with most KOHLER handshowers and accessories; Statement round, oblong, or barrel-shaped design recommended
- Integrated water supply allows water to be plumbed directly through bottom bracket of slidebar
- Allows adjustment of handshower angle
- Adjustable mounting brackets offer installation flexibility



Available Colors/Finishes

Color tiles intended for reference only.

	CP	Polished Chrome
	SN	Vibrant Polished Nickel
	AF	Vibrant French Gold
	BN	Vibrant Brushed Nickel
	BV	Vibrant Brushed Bronze
	BL	Matte Black
	2MB	Vibrant Brushed Moderne Brass
	TT	Vibrant Titanium
	BGP	Vibrant Brushed Graphite

1-800-4KOHLER (1-800-456-4537)
Kohler Co. reserves the right to make revisions without notice to product specifications.
For the most current specification sheet, go to www.kohler.com USA or www.kohler.ca Canada.
3-27-2026 19:14 - US-CA

THE BOLD LOOK OF KOHLER®

Codes/Standards

None Applicable

Material

- Premium metal construction for durability and reliability
- KOHLER finishes resist corrosion and tarnishing

Recommended Products/Accessories

K-23723 Faucet cleaner

Warranty

See website for detailed warranty information.

KOHLER® Faucet Lifetime Limited Warranty

1-800-4KOHLER (1-800-456-4537)
Kohler Co. reserves the right to make revisions without notice to product specifications.
For the most current specification sheet, go to www.kohler.com USA or www.kohler.ca Canada.
3-27-2026 19:14 - US-CA

THE BOLD LOOK OF KOHLER®

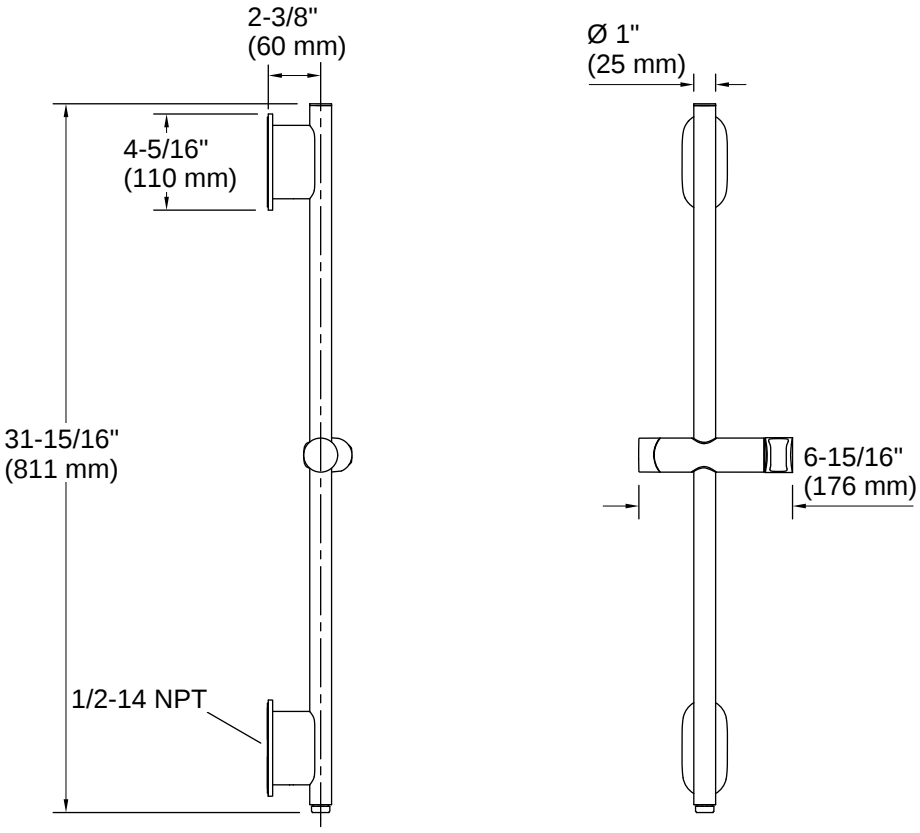

Installation

- Wall-mount
- May require additional service parts based on installation type (see installation guide for details)

Installation Notes

Install this product according to the installation instructions.

1-800-4KOHLER (1-800-456-4537)
Kohler Co. reserves the right to make revisions without notice to product specifications.
For the most current specification sheet, go to www.kohler.com USA or www.kohler.ca Canada.
3-27-2026 19:14 - US-CA

THE BOLD LOOK OF KOHLER.