MOEN®

Specifications

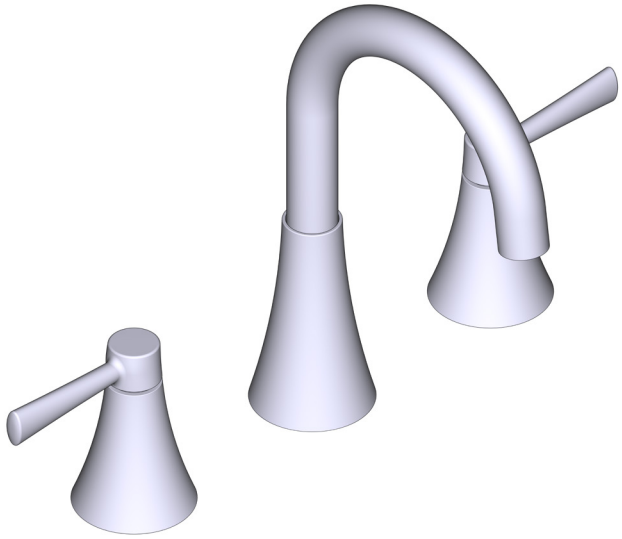

Ronan™

Two-Handle Widespread Lavatory Faucet

MODELS: 84023 Series

NOTE: SPOUT INSTALLS THROUGH 1-1/8" MIN. DIA. HOLE.
VALVES INSTALL THROUGH 1-1/8" MIN. DIA. HOLE.
For Deck Thickness 1-3/8" to 3", use service kit number 115001.
Valves install through 1-1/4" dia. hole.

ADA

WaterSense Meets EPA Criteria
Certified by IAPMO R&T

DESCRIPTION
- Duralock™ quick connect installation
- Metal construction with various finishes identified by suffix
- 1/2" IPS connections
- Includes non-metal push down waste assembly

OPERATION
- Lever style handles
- Hot side counterclockwise to open (clockwise to close)
- Cold side clockwise to open (counterclockwise to close)

FLOW
- Water usage is limited to these maximum flow rates as indicated by the corresponding product markings
- 1.2 gpm max (4.5L/min) at 60 psi

CARTRIDGE
- 1234 cartridge
- Nonmetallic and stainless steel material

STANDARDS
- Third party certified to WaterSense,® ASME A112.18.1/CSA B125.1, and all applicable requirements referenced therein
- Certified to NSF 61/9 & 372
- Products marked with 1.2 gpm are compliant with California water efficiency regulations
- Complies with California Proposition 65 and with the Federal Safe Drinking Water Act
- ADA for lever handle

WARRANTY
- Lifetime limited warranty against leaks, drips and finish defects to the original homeowner
- 10 year limited warranty when used in a multifamily installation
- 5 year limited warranty when used in a commercial installation
- Visit www.moen.com/support for complete details and limitations

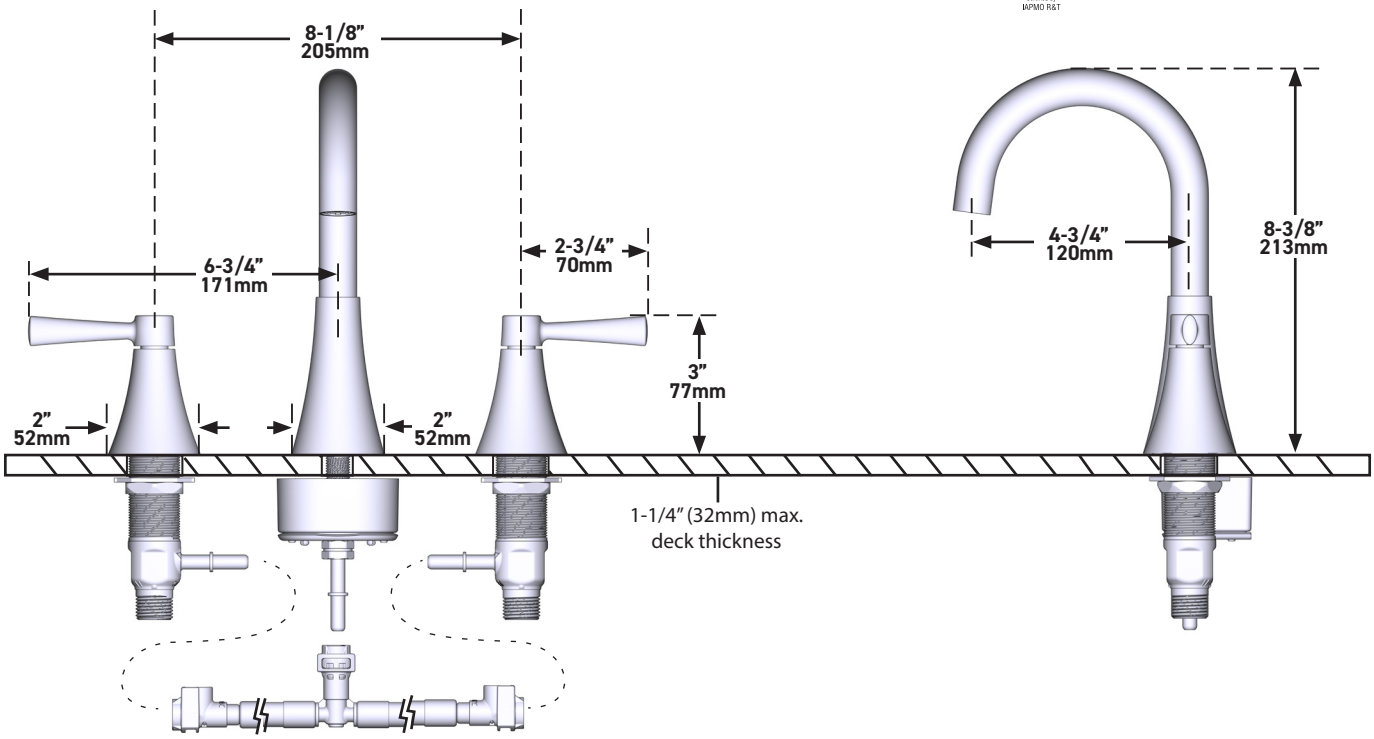

CRITICAL DIMENSIONS DO NOT SCALE

07/12/2022 SPC2173 500002515S9
Released 01