60" Acrylic Tub With Square Overflow & Pop-Up Drain

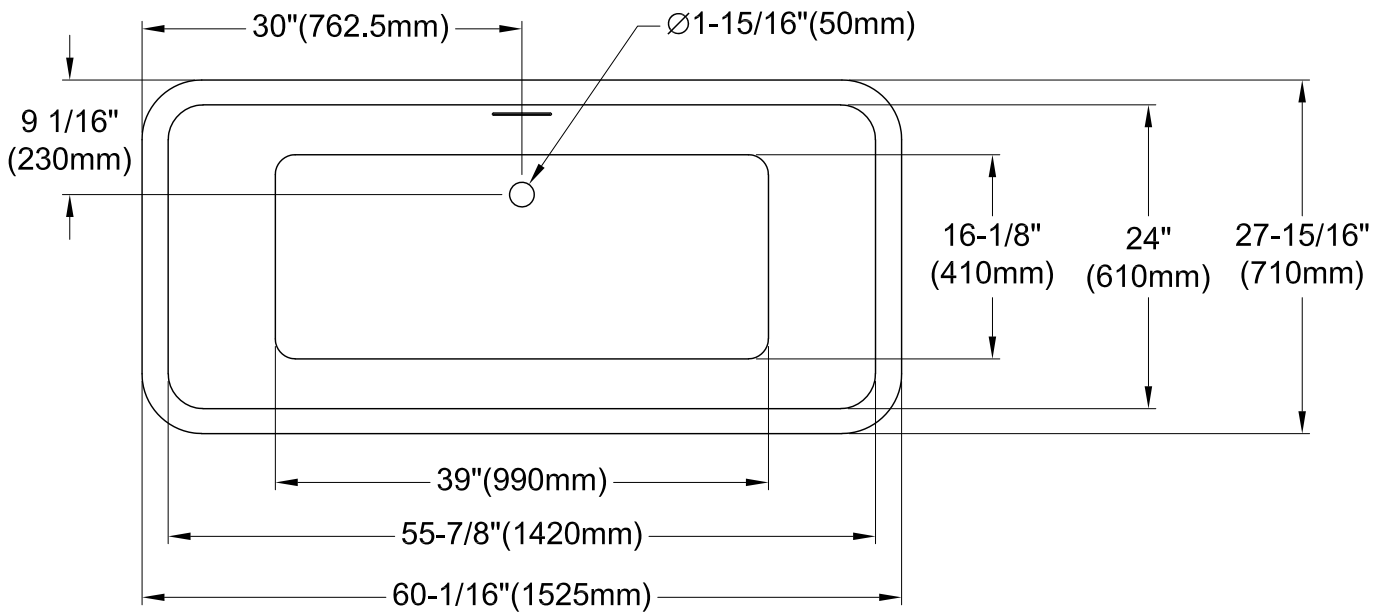

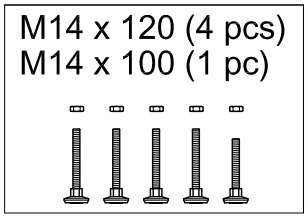

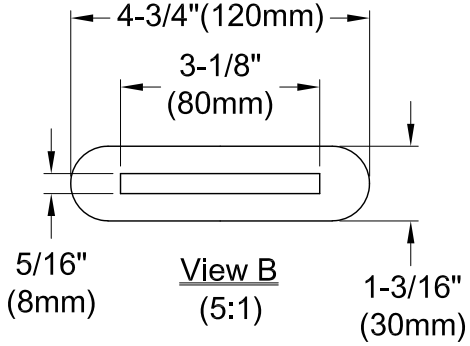

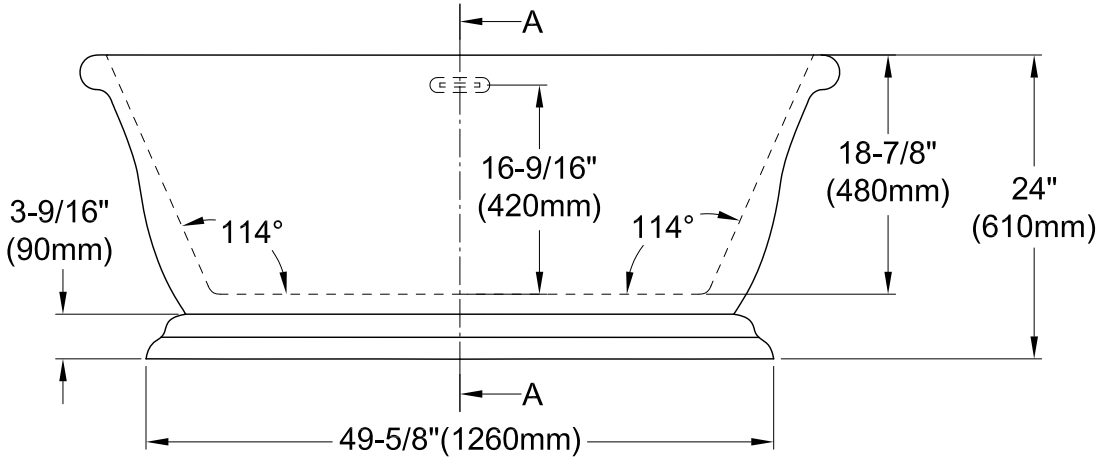

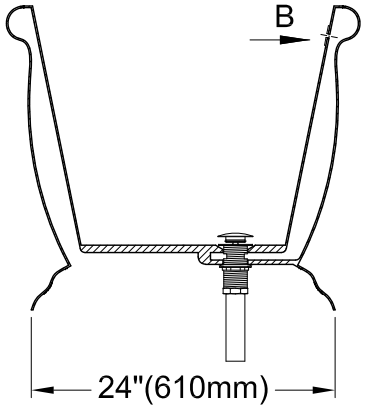

2018-11-A