METAL WARDROBE INSTRUCTION

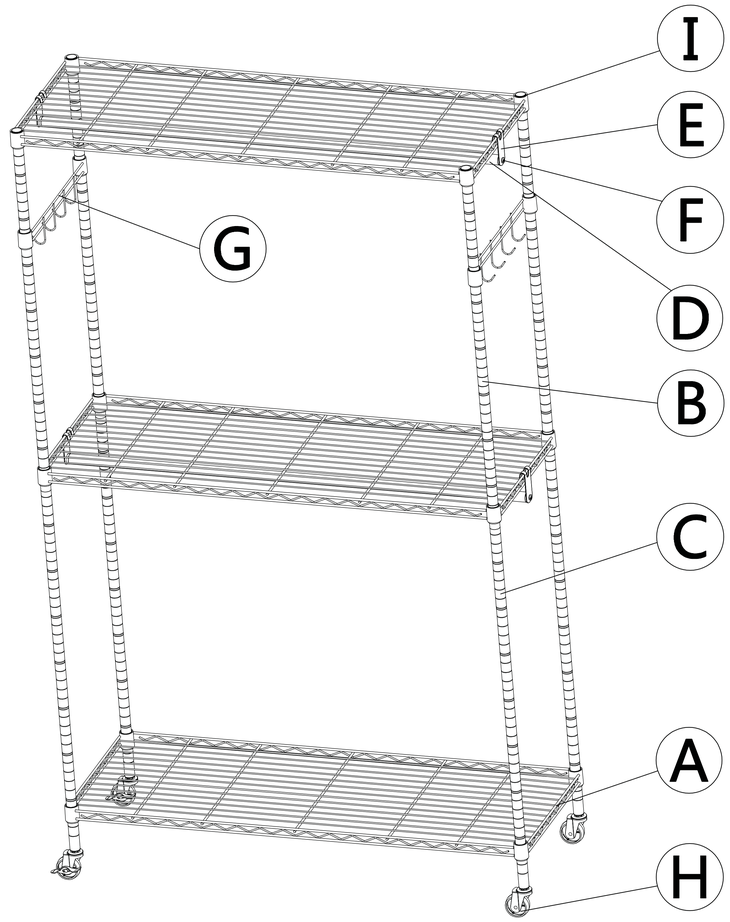

No.	A	B	C	D	E	F	G	H	I
Name	Wire Shelf	Upper Pole	Lower Pole	Clothes Hanger Rod	Hook Bracket	Screw	Support Rail with Hooks	Casters	Plastic Clip
Parts	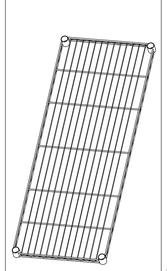	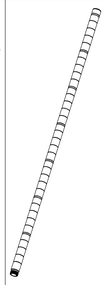	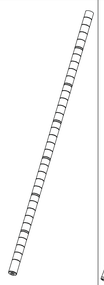	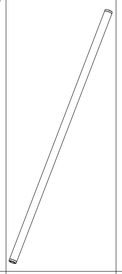	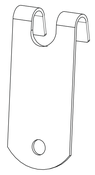			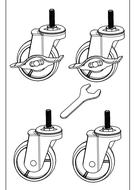	
Quantity	3PCS	4PCS	4PCS	2PC	4PCS	4PCS	2PCS	4PCS	32PCS

Assembly Steps:

1 Screw the Casters(H)into the bottom of four Lower Poles(C) by wrench,and then snap the Plastic Clips(I)into the grooves of four lower pole at your desired position. Make sure the arrow of plastic clips are pointed up.

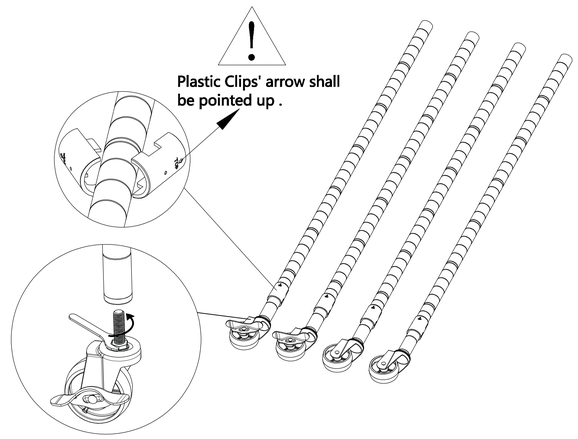

2 Please make sure that you have the Wire Shelf(A)the correct way up, hold the wire shelf on it's side and slide the top of four poles through the bottom of the wire shelf at it's corners until there is a snug fit,and then set the wire shelf upright.

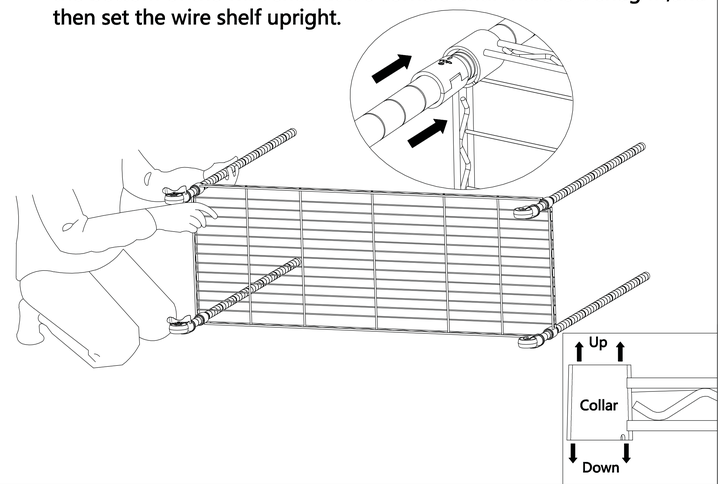

3 Screw Upper Poles (B) into lower poles by screw connectors which is already assembled on the upper poles.

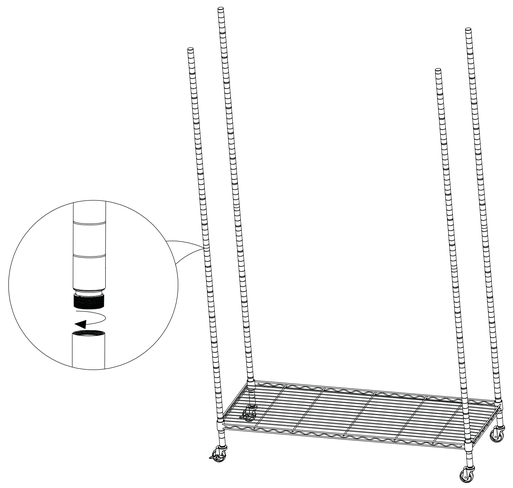

4 Snap plastic clips into the pole grooves at your desired position for next wire shelf. Slide down the shelf from top down onto the plastic clips .

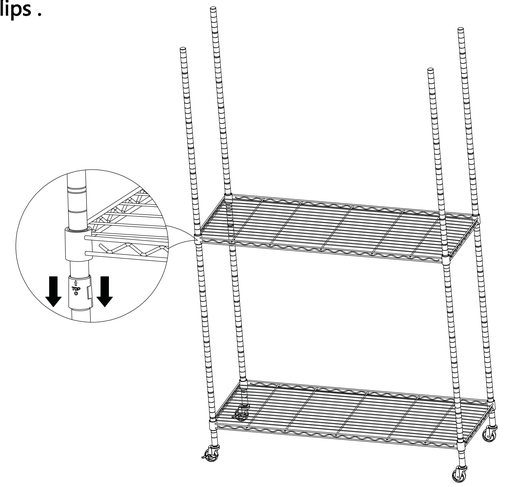

5 Repeat step 3 to assemble 2pcs Support Rail with Hooks (G) and top wire shelf.

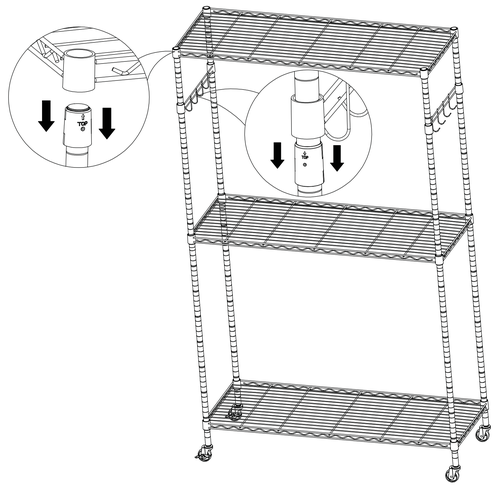

6 Screw two Hook Bracket (E) onto Clothes Hanger Rod(D) by Screw (F) and its end and make it fastened,pushing firmly down on every shelf at corners by rubber mallet to ensure the shelf in a blace over the plastic clips.

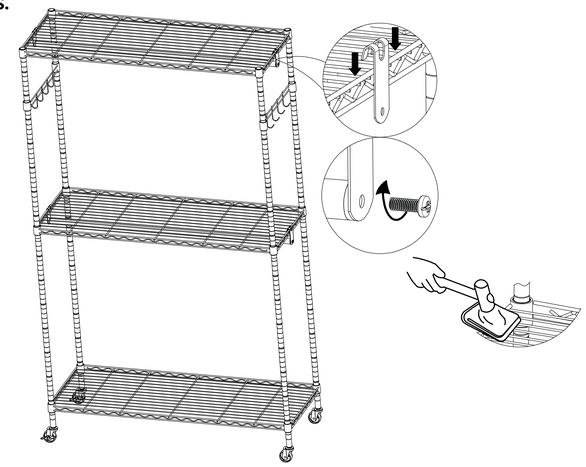

MADE IN CHINA