60" SINGLE OVAL SINK COUNTERTOP WITH 1.5 IN. THICKNESS

ARIEL

OVERALL DIMENSIONS

60.25" W x 22" D x 1.5" H

COUNTERTOP OPTIONS

Carrara White Quartz

FEATURES

- Solid countertop with mitered edges & seams
- Undermount white oval sink
- Pre-drilled for 8" widespread faucet

INCLUDED

- Countertop
- Matching Backsplash
- Oval Sink

COUNTERTOP PLAN VIEW

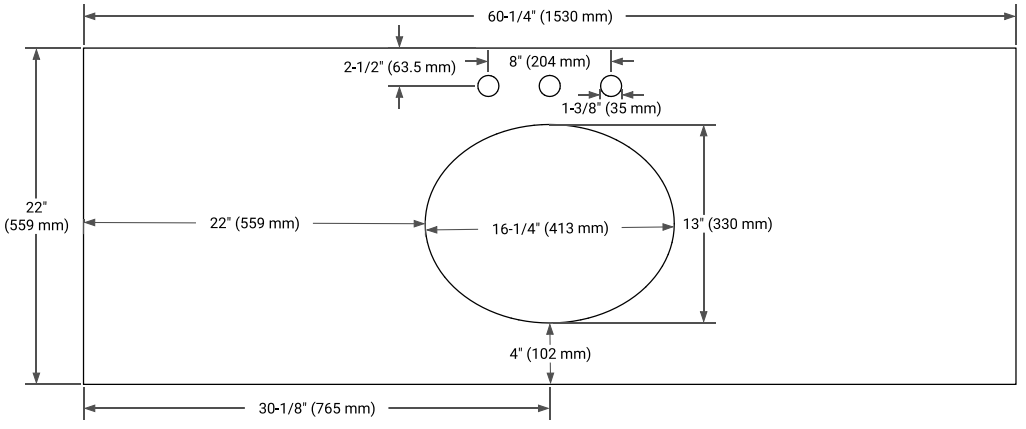

EDGE SIDE VIEW

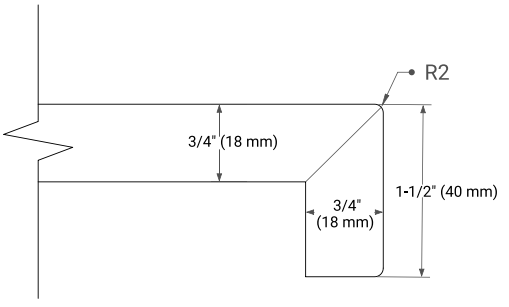
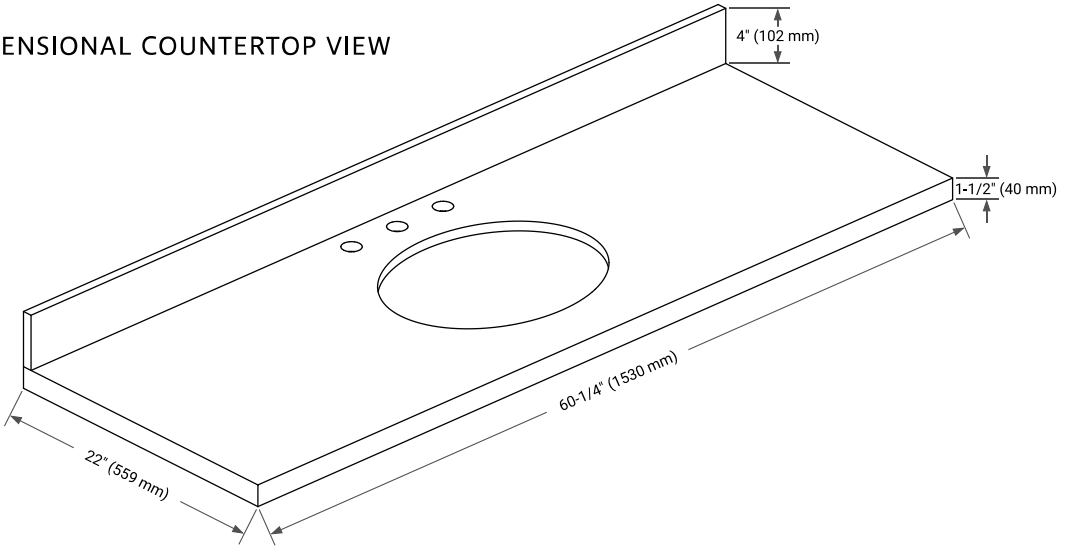
THREE DIMENSIONAL COUNTERTOP VIEW