ITEM ID	DESCRIPTION
W0568 - 24in	24in Vanity w/Vanity

REV	ECO#	DESCRIPTION	REV'D BY DATE	CHK'D BY DATE	APRV'D BY DATE
0		RELEASED	AGS 03/09/2020	AGS 03/09/2020	AGS 03/09/2020

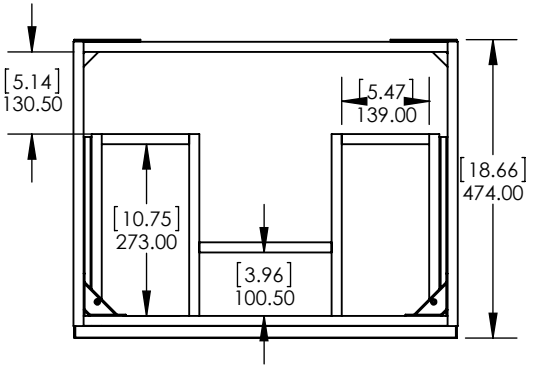

Top View / Vista Superior

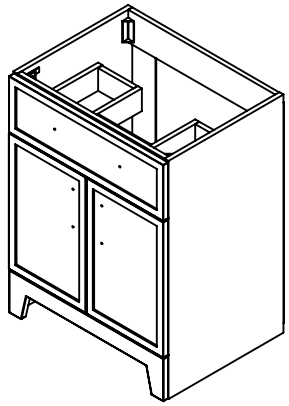

Isometric View / Vista Isometrica

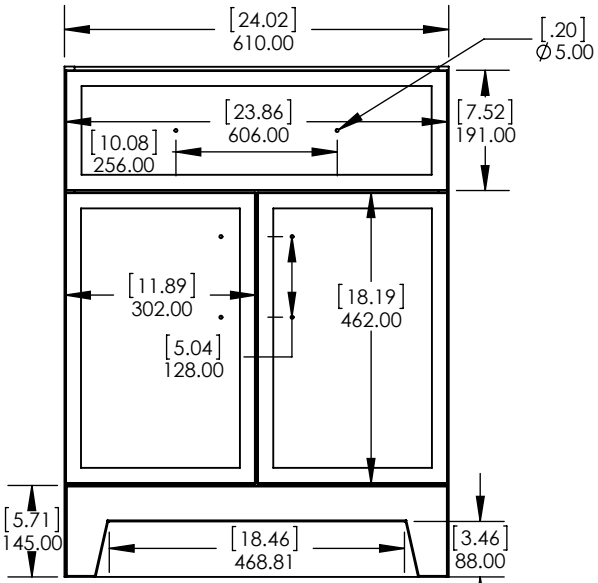

Front View / Vista Frontal

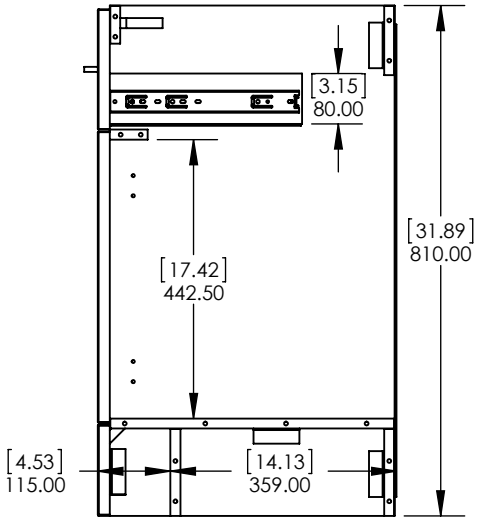

Side View / Vista Lateral

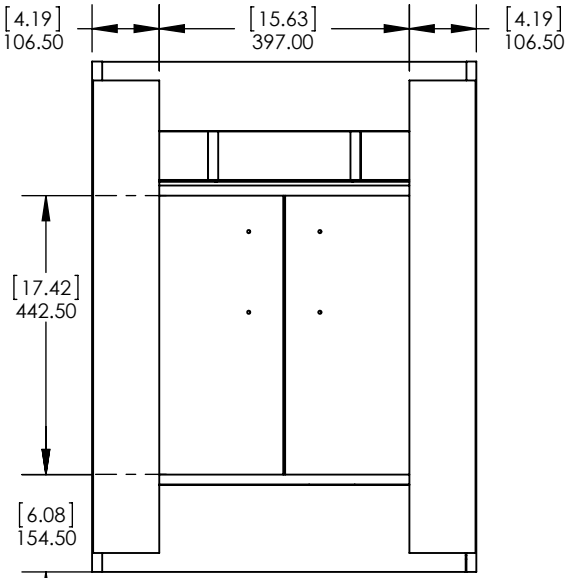

Back View / Vista Trasera

PROPRIETARY AND CONFIDENTIAL
THE INFORMATION CONTAINED IN THIS DRAWING IS THE SOLE PROPERTY OF WOODCRAFTERS HOME PRODUCTS L.L.C. ANY REPRODUCTION IN PART OR AS A WHOLE WITHOUT THE WRITTEN PERMISSION OF WOODCRAFTERS HOME PRODUCTS L.L.C. IS PROHIBITED.

GEOMETRIC TOLERANCES PER: ASME-Y14.5-94

Lineal	Angular
±0.5mm	±0.5°

Drawn BY/ Dibujado por:		05/07/2022
Checked By / Revisado Por:		05/07/2022
Approved By / Revisado Por:		05/07/2022

MASTERBRAND CABINETS, INC.

TITLE Titulo: W0568 - 24in

Material:

# of Drawing/ de Dibujo:

PAGE 1 OF 6

REV: 1

ITEM ID	DESCRIPTION
W0568 - 24in	24in Vanity w/Vanity

REV	ECO#	DESCRIPTION	REV'D BY DATE	CHK'D BY DATE	APRV'D BY DATE
0		RELEASED	AGS 03/09/2020	AGS 03/09/2020	AGS 03/09/2020

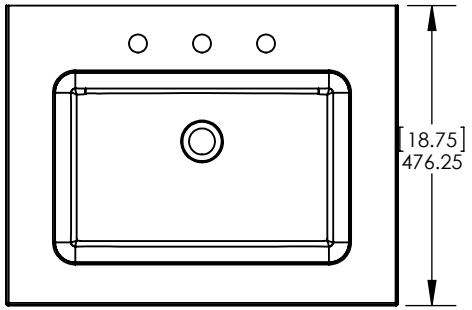

Top View / Vista Superior

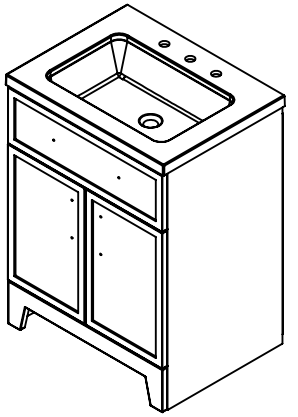

Isometric View / Vista Isometrica

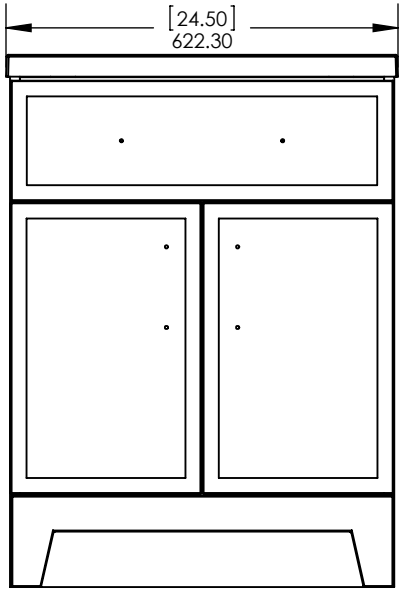

Front View / Vista Frontal

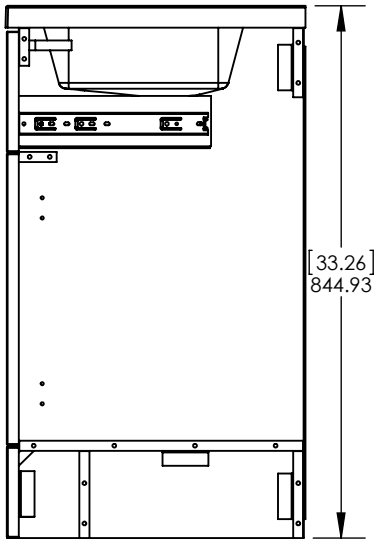

Side View / Vista Lateral

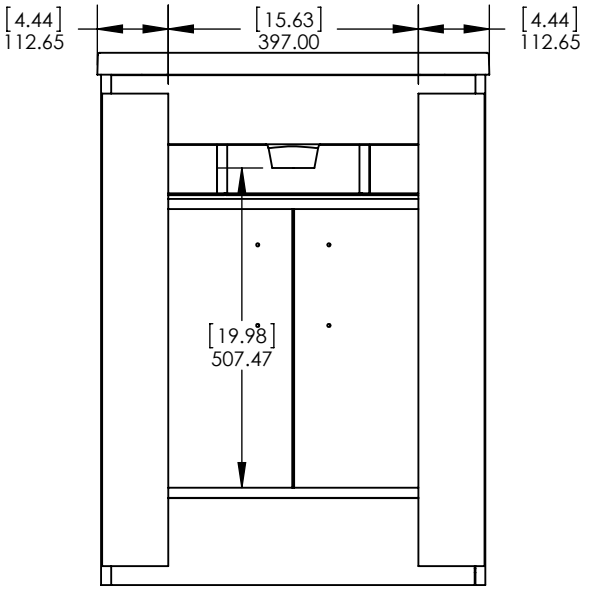

Back View / Vista Trasera

PROPRIETARY AND CONFIDENTIAL
THE INFORMATION CONTAINED IN THIS DRAWING IS THE SOLE PROPERTY OF WOODCRAFTERS HOME PRODUCTS L.L.C. ANY REPRODUCTION IN PART OR AS A WHOLE WITHOUT THE WRITTEN PERMISSION OF WOODCRAFTERS HOME PRODUCTS L.L.C. IS PROHIBITED.

GEOMETRIC TOLERANCES PER: ASME-Y14.5-94

Lineal	Angular
±0.5mm	±0.5°

Drawn BY/ Dibujado por:		05/07/2022
Checked By / Revisado Por:		05/07/2022
Approved By / Revisado Por:		05/07/2022

MASTERBRAND CABINETS, INC.

TITLE Titulo: W0568 - 24in

Material:

# of Drawing/ de Dibujo:

PAGE 2 OF 6

REV: 1