7-PIECE ACACIA DINING SET

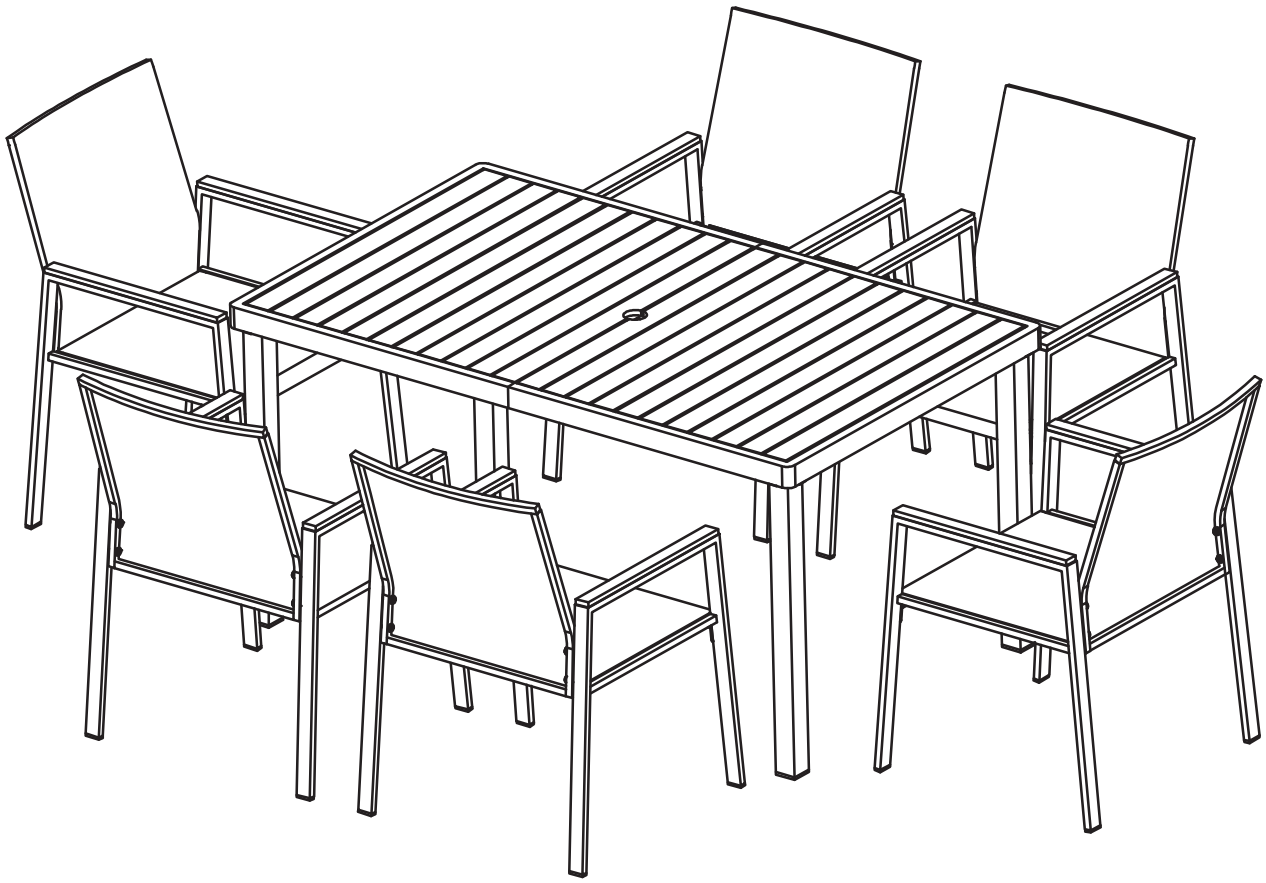

CHAIR

352 pounds
165 kg
Weight Capacity

TABLE

165 pounds
75 kg
Weight Capacity

HELPFUL HINT

We advise reading this manual fully, and assembling the furniture set soon after purchase.
Check that all parts are accounted for and familiarize yourself with the assembly before beginning.
Save this manual for future reference.

COMPONENTS

Inspect packaging to ensure all parts are accounted for before disposing of packing materials.

No.	Parts	Qty.
A	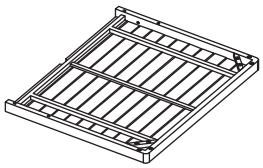 Table Top	2
B	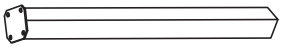 Leg - Table	4
C	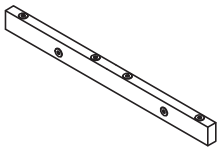 Support Bar - Table	2
D	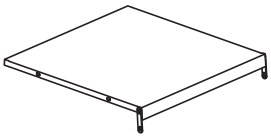 Seat Frame - Chair	6
E	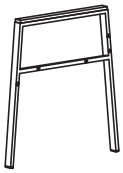 Left Leg - Chair	6
F	 Right Leg - Chair	6
G	 Back Frame - Chair	6

No.	Hardware	Qty.
I	 Bolts M6x15	40
J	 Bolts M6x35	54
K	 Washer Steel	94
L	 Allen Key	2

⚠WARNING⚠

CHOKING HAZARD — This item contains small parts that could be swallowed by children. Keep children away during assembly.

Tip: Always fully insert the hex key into the designated notch.

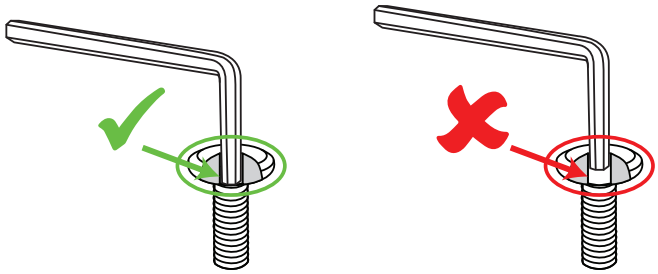

If the hex key is not fully inside the notch, the hex key could slip out, causing damage to the bolt head. Repeated hex key slipping will cause the notch to become rounded, making it difficult or impossible to tighten the bolt with the hex key.

ATTENTION! Do not fully tighten any hardware until all components are loosely connected. If each bolt is fully tightened too soon, mounting holes may not align and parts not fit together easily.

Turn each bolt, by hand, until the screw grips into the mounting hole. Continue this process until all bolts have been installed. Tighten all hardware.

Do not use any electronic tools to assemble this product. The high energy of electronic tools will cause hardware to over-tighten, stripping the bolt, bolt head, or bore holes.

Only tighten the hardware entirely after the product is fully assembled.

Do not over-tighten screws or bolts.

⚠WARNING:

Manufacturer and seller expressly disclaim any and all liability from personal injury, property damage or loss, whether direct or indirect, or incidental, resulting from the incorrect attachment, improper use, inadequate maintenance, or neglect of this product.

TABLE ASSEMBLY

STEP 1

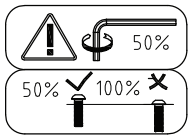

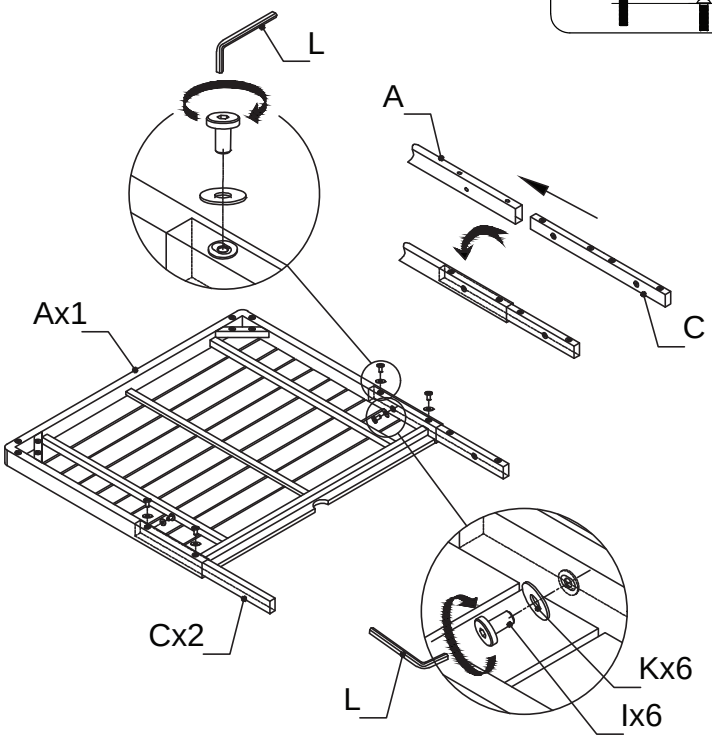

Do not fully tighten hardware until after Step 3 is complete.

STEP 2

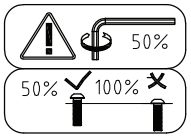

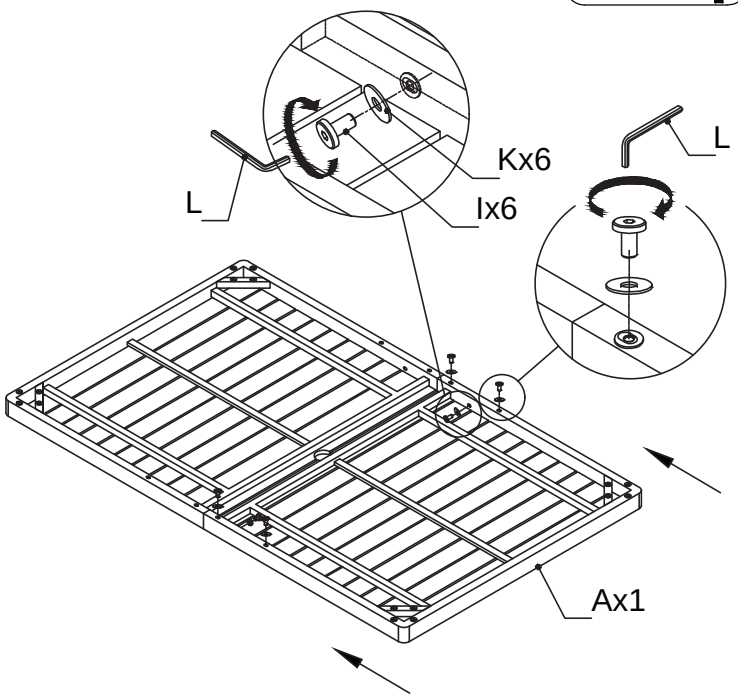

Do not fully tighten hardware until after Step 3 is complete.

STEP 3

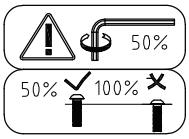

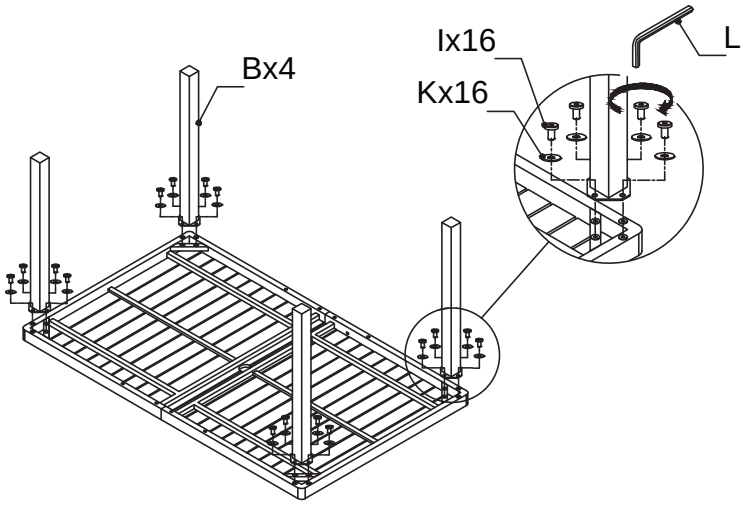

Fully tighten all hardware from previous steps.

STEP 4

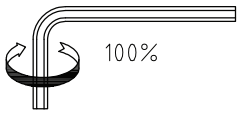

Fully tighten

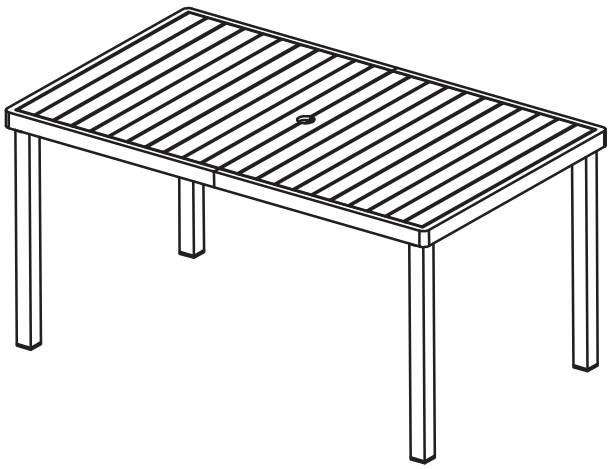

Finished!

CHAIR ASSEMBLY

STEP 5

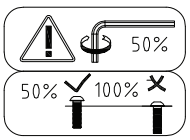

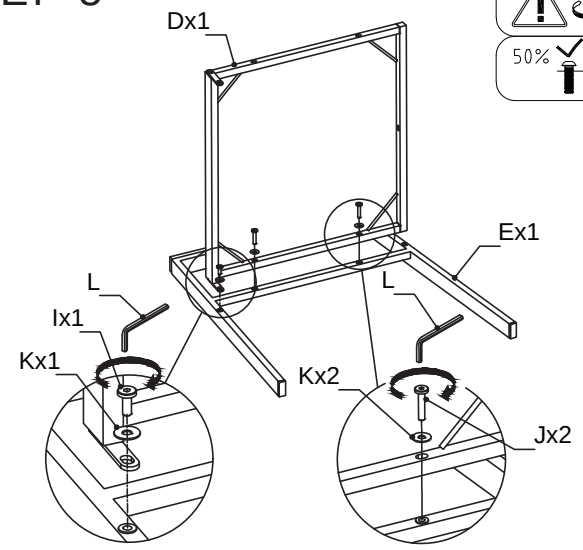

Do not fully tighten hardware until after Step 7 is complete.

x6

STEP 6

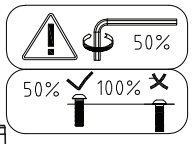

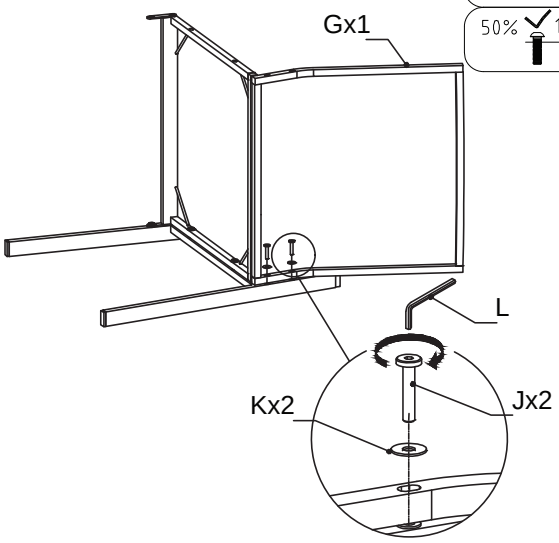

Do not fully tighten hardware until after Step 7 is complete.

x6

STEP 6

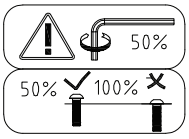

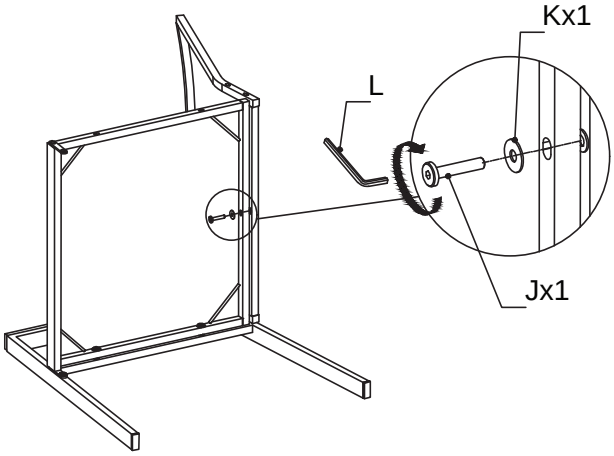

Do not fully tighten hardware until after Step 7 is complete.

x6

STEP 7

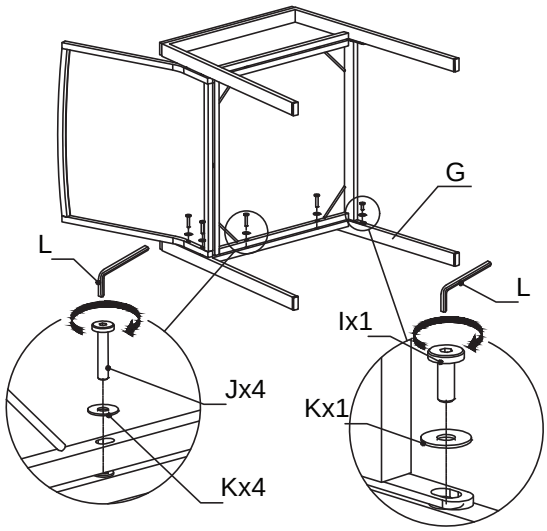

Fully tighten all hardware from previous steps.

x6

STEP 8

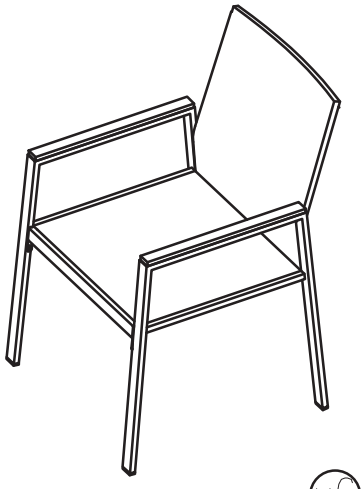

x6

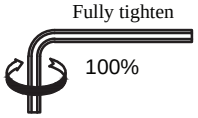

Finished!

WARNING!

⚠ SAFETY STATEMENTS & WARNINGS ⚠

- Do not exceed the weight capacity of the furniture.
- Do not sit, stand, or climb on the table. Do not stand on chairs or loveseat.
- Inspect hardware often and tighten loose hardware before use.
- Do not put hot items on or near furniture.
- Keep furniture a safe distance from heat sources such as fire pits, patio heaters, and grills.
- Do not allow children to use this product without adult supervision.
- Do not use harsh chemicals or abrasive materials to clean the furniture.

Any modification to the product or failure to follow the recommended care intructions will void the product warranty

⚠WARNING!

Manufacturer and seller expressly disclaim any and all liability from personal injury, property damage or loss, whether direct or indirect, or incidental, resulting from the incorrect attachment, improper use, inadequate maintenance, or neglect of this product.