Awaken® | K-98770

Shower arm diverter

Features

- Diverter switches water between showerhead or handshower, or both on at one time
- Easily mounts on the end of your shower arm and fits most standard handshower hoses, handshowers, and showerheads
- Includes flow restrictor that limits water flow to 2.5 gpm (gallons per minute) when one or both showering components are running



Sustainability

CONTAINS 10% RECYCLED CONTENT

Available Colors/Finishes

Color tiles intended for reference only.

	CP	Polished Chrome
	BN	Vibrant Brushed Nickel
	BL	Matte Black
	2MB	Vibrant Brushed Moderne Brass

1-800-4KOHLER (1-800-456-4537)
Kohler Co. reserves the right to make revisions without notice to product specifications.
For the most current specification sheet, go to www.kohler.com USA or www.kohler.ca Canada.
3-27-2026 16:59 - US-CA

THE BOLD LOOK OF KOHLER

Codes/Standards

ASME A112.18.1/CSA B125.1

Material

- KOHLER finishes resist corrosion and tarnishing

Recommended Products/Accessories

K-23723 Faucet cleaner

Warranty

See website for detailed warranty information.

KOHLER® Faucet Lifetime Limited Warranty

1-800-4KOHLER (1-800-456-4537)
Kohler Co. reserves the right to make revisions without notice to product specifications.
For the most current specification sheet, go to www.kohler.com USA or www.kohler.ca Canada.
3-27-2026 16:59 - US-CA

THE BOLD LOOK OF KOHLER.

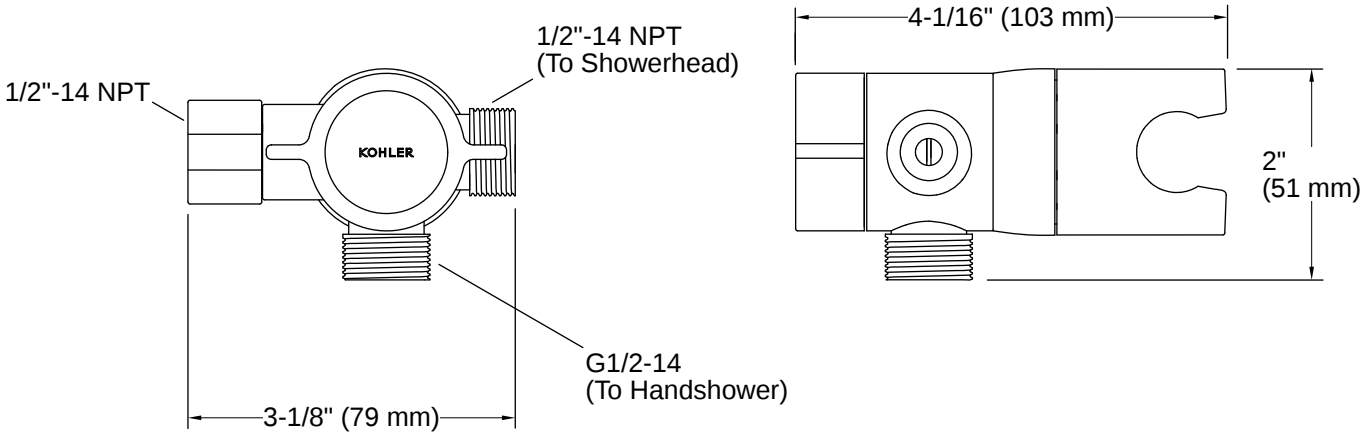

Installation Notes

Install this product according to the installation instructions.

1-800-4KOHLER (1-800-456-4537)
Kohler Co. reserves the right to make revisions without notice to product specifications.
For the most current specification sheet, go to www.kohler.com USA or www.kohler.ca Canada.
3-27-2026 16:59 - US-CA

THE BOLD LOOK OF KOHLER