4 Side Mount Options

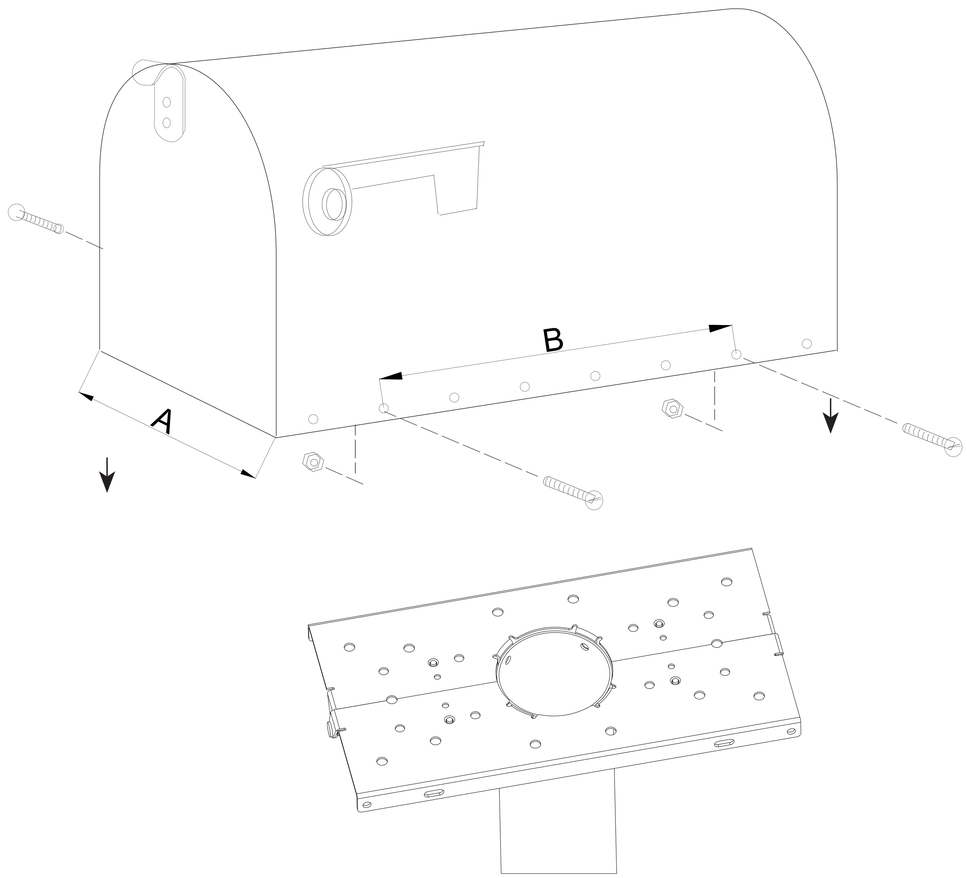

Mailbox Installation Hole Size		
Hole Position	A (in)	B (in)
1	6.10	11.25
2	6.10	7.40-8.00
3	8.00	11.25
4	8.00	7.40-8.00

A

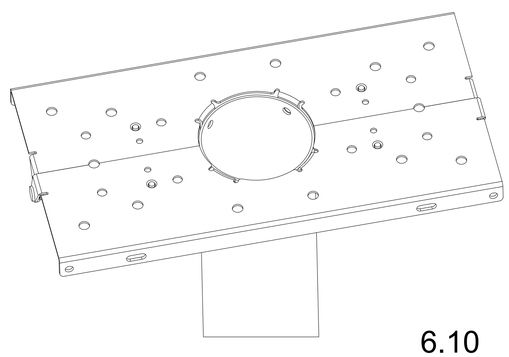

6.10

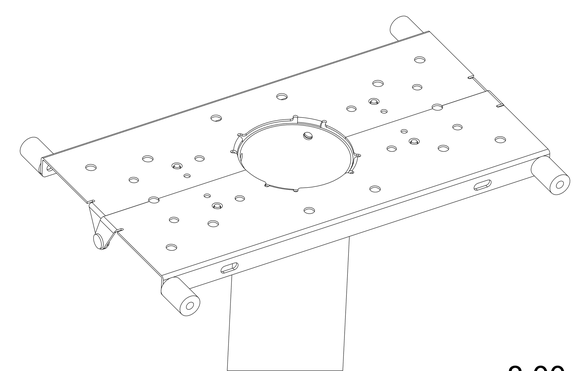

8.00

B

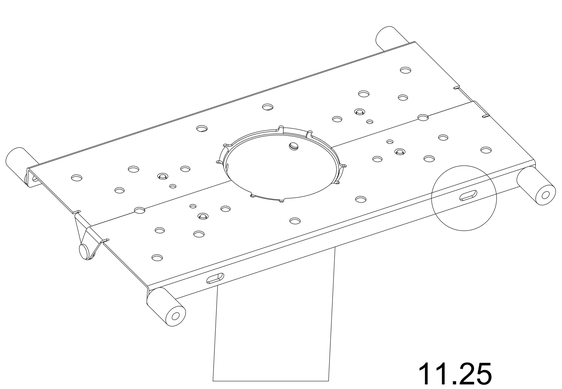

11.25

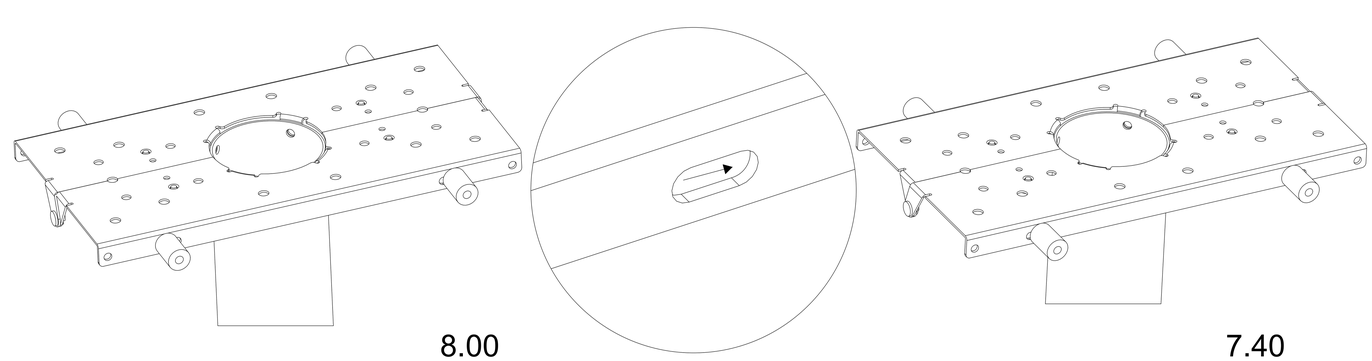

8.00

7.40

5 Bottom Mount Options

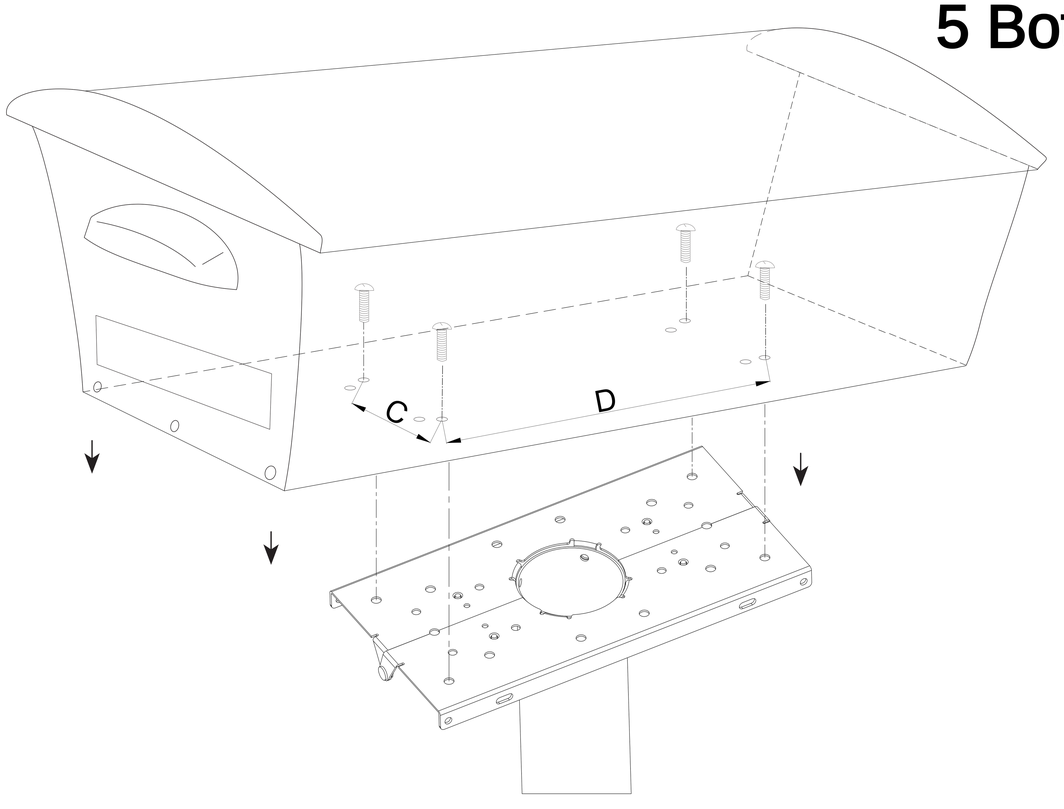
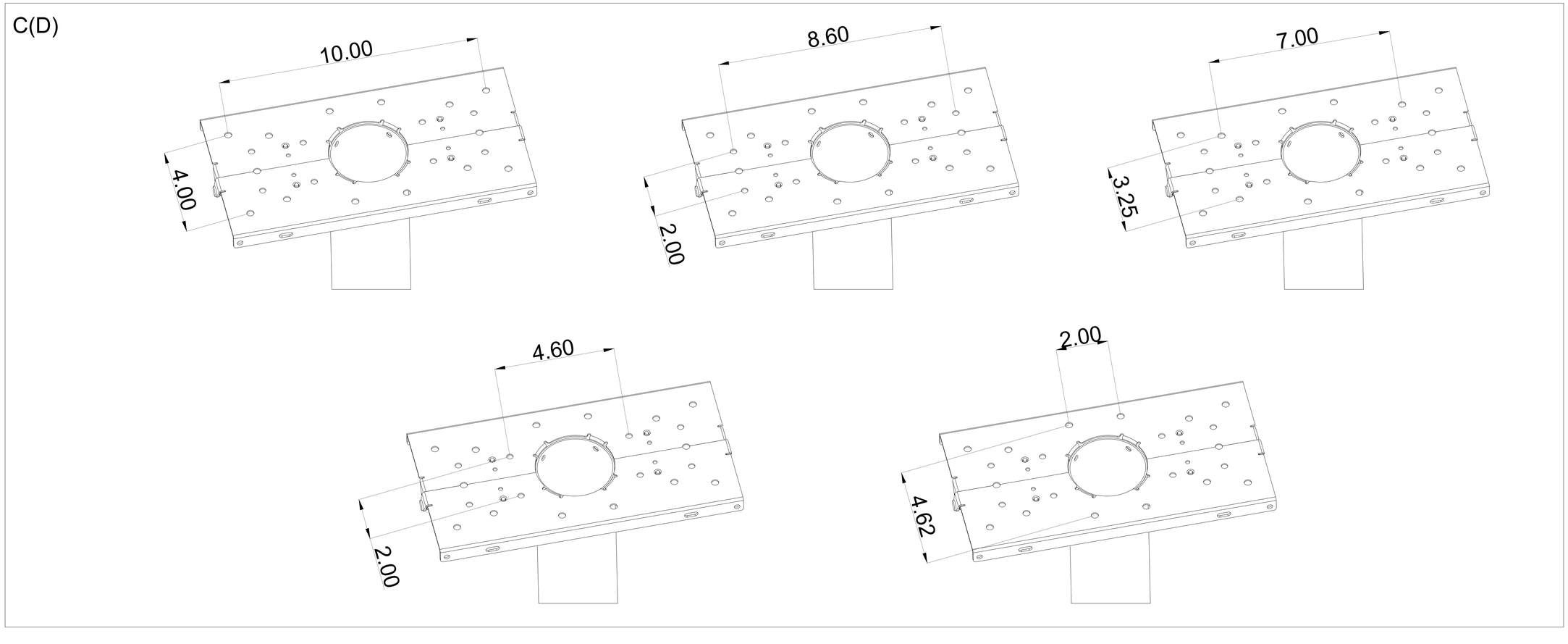
Mailbox Installation Hole Size		
Hole Position	C (in)	D (in)
1	4.00	10.00
2	2.00	8.60
3	3.25	7.00
4	2.00	4.60
5	4.62	2.00