KOHLER. Faucets

Elate®

Deck-mount bath faucet trim

K-T33969-4

Features

- Two-handle bath faucet trim
- 7-1/2" (191 mm) gooseneck nondiverter spout with slip-fit connection
- Coordinates with other products in the Elate collection
- Valve sold separately

Material

- Premium material construction for durability and reliability
- KOHLER finishes resist corrosion and tarnishing

Installation

- Deck-mount

Required Products/Accessories

K-300-K 1/2" ceramic high-flow valve system

or

K-300-KR 1/2" ceramic high-flow valve

or

K-301-K 3/4" high-flow bath valve

Recommended Products/Accessories

K-27383 18" towel bar
K-27384 24" towel bar
K-27385 Robe hook
K-27386 Towel ring
K-27387 Pivoting toilet paper holder

Optional Products/Accessories

1032704 Deep Rough-In Kit



ADA | **CSA B651** | **OBC**

Codes/Standards

ASME A112.18.1/CSA B125.1
ADA
ICC/ANSI A117.1
CSA B651
OBC

KOHLER® Faucet Lifetime Limited Warranty

See website for detailed warranty information.

Available Colors/Finishes

Color tiles intended for reference only.

Color	Code	Description
	CP	Polished Chrome
	BN	Vibrant® Brushed Nickel
	BL	Matte Black
	2MB	Vibrant® Brushed Moderne Brass

KOHLER. Faucets

Elate®

Deck-mount bath faucet trim

K-T33969-4

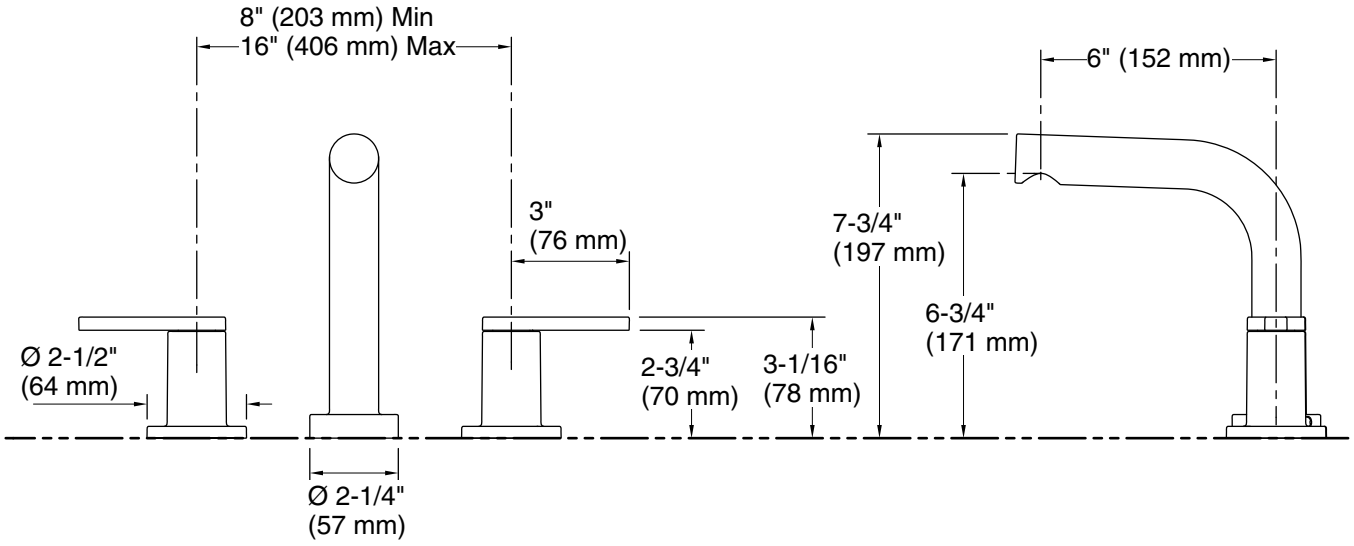

Technical Information

All product dimensions are nominal.

Spout:

Spout reach: 6" (152 mm)

Notes

Install this product according to the installation instructions.

ADA, OBC, CSA B651 compliant when installed to the specific requirements of these regulations.