16836-B

STOP

DO NOT RETURN TO THE STORE!

If you discover missing or damaged parts,
or if you have questions about the building process,
please reach out to us directly for the fastest service.

24/7 Support

help.backyardproducts.com

- Answers to frequently asked questions
- Technical assistance and how-to videos
- Submit a help request
- Request replacement parts

Business Hours

(734) 242-6900

Monday - Friday ..... 8:00am - 6:00pm EST
Saturday - Sunday .....Closed

INSTALLERS WANTED

Did you enjoy building your shed?

JOIN OUR TEAM

AND MAKE UP TO $1,500/WEEK*

Call a Recruiter Today! 734-365-7000

Flexible schedule

No selling, just building

Bonus incentives available

Scan the flowcode to apply today. or visit backyardinstaller.com

*based on number of completed installations

(This page intentionally left blank.)

Backyard Products, LLC
1000 Ternes Drive
Monroe, MI 48162

16836-B | 12/31/2025

ASSEMBLY MANUAL

GABLE 12' x 24' (365,8 x 731,5 cm)

ACTUAL FLOOR SIZE: 144" x 288" (365,8 x 731,5 cm)

KEEP THIS MANUAL FOR FUTURE REFERENCE

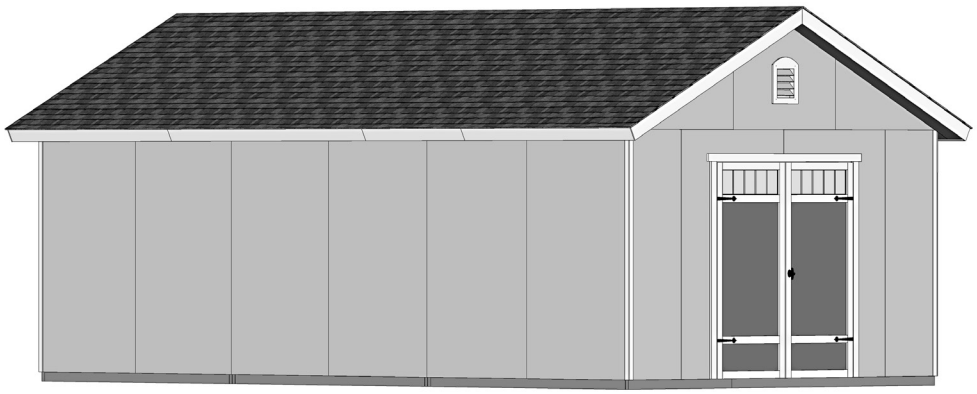

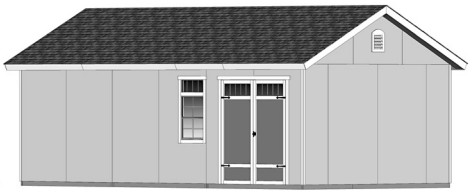

Eave Door with Optional Window
(Instruction for window installation located in window kit.)

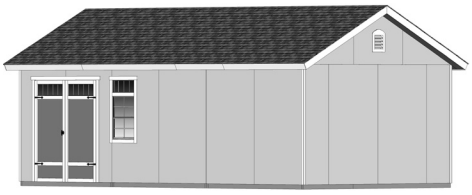

Choose from 3 Door Trim Options:

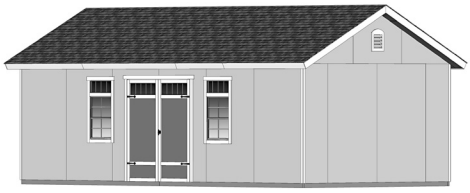

⚠ IMPORTANT! ⚠

READ INSTRUCTIONS THOROUGHLY PRIOR TO BEGINNING ASSEMBLY.

BEFORE YOU BEGIN

- **BUILDING RESTRICTIONS AND APPROVALS**
  Be sure to check local building department and homeowners association for specific restrictions and/ or requirements before building.
- **ENGINEERED DRAWINGS**
  Contact our Customer Service Team if engineered drawings are needed to pull local permits.
- **SURFACE PREPARATION**
  To ensure proper assembly you must build your shed on a level surface.
  Recommended methods and materials to level your shed are listed on page 13.
- **CHECK ALL PARTS**
  Inventory all parts listed on pages 4-7.
- **ADDITIONAL MATERIALS**
  You will need additional materials to complete your shed. See pages 3 for required and optional materials and quantities.

CONTACT OUR CUSTOMER SERVICE TEAM IF ANY PARTS ARE MISSING OR DAMAGED

- Order form and warranty at back of manual -

Call: 1-734-242-6900 email: customerservice@backyardproducts.com

TOOLS

Required

Phillips Screwdriver

Drill / Driver
- 1/8" Drill Bit
- 1/4" Drill Bit
- 5/16" Drill Bit
- 1/2" Drill Bit
- #2 Phillips Drive Bit

Hammer

Level

Pencil

Tape Measure

Square or

Utility Knife

Shingle Blades

Caulk Gun

Paint Tools

Safety Glasses

Hand Saw

Ladder

Optional

Tool Belt/ Nail Pouch

Tin Snips (for drip edge)

Chalk Line

Nail Gun
- gun nails

Gloves

Safety! Always use approved safety glasses during assembly.

HELPFUL REMINDER SYMBOLS

Look for these symbols for helpful reminders throughout this manual.

= Assistance Required; two or more people.

= Ensure squareness.

= Important required step or operation.

= Helpful assembly hint.

= Mark part with pencil.

BEGIN = Beginning of steps for assembly or installation.

FINISH = You have finished the assembly or installation.

= Level

ORIENT LUMBER AND TRIM FOR BEST APPEARANCE

Framing lumber is graded for structural strength and not appearance. Exterior trim is graded for one good side.

Always install the material leaving the best edge and best surface visible. Please remember that these blemishes in no way negatively affect the strength or integrity of our product. (See Fig. **A**, **B**, **C**.)

A

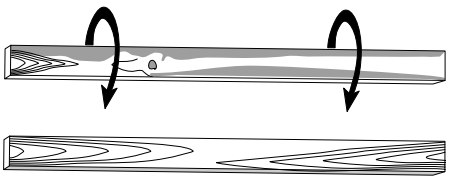

B

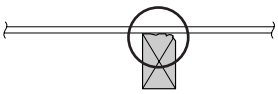

C

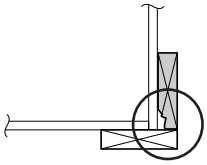

ADDITIONAL MATERIALS

FOUNDATION OR FLOOR MATERIALS

• If your purchase comes with a floor system, the materials to construct your floor will be in a separate kit(s).

• See the FLOOR LEVELING section on page 13 for recommended methods and suggested materials to properly level your floor, as this will vary depending on your specific site.

COMPLETING YOUR SHED

You will need these additional materials:

☐ **3-TAB SHINGLES (Bundles)..... 15**

☐ **PAINT FOR SIDING (Gallons)....., 4**
Use 100% acrylic latex exterior paint.
(2) coats recommended.

☐ **1" GALVANIZED ROOFING NAILS(lbs)... 10**
For shingles.

☐ **PAINT FOR TRIM ..... 3 Quarts**
Use 100% acrylic latex exterior paint.

☐ **CAULK ... 7 Tubes**
Use acrylic latex exterior caulk that is paintable.

FRAMING NAILS

Boxed Nails	*-Or-*	*Nail Gun* *Strip/Coil Nails*
☐ **x10 lbs.**		☐ **x700**
☐ **x13 lbs.**		☐ **x2700**

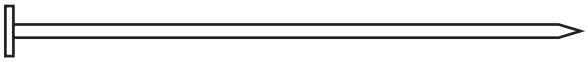

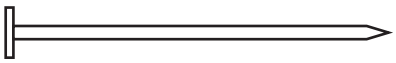

OPTIONAL MATERIALS

☐ **DRIP EDGE (Feet)..... 90**

☐ **#15 ROOFING FELT (Sq ft. to cover)..... 437**

☐ **1" GALVANIZED ROOFING NAILS(lbs).... ¼**
For roofing felt.

REFER TO THE BACK OF THIS MANUAL AND THE MANUFACTURER'S INSTRUCTIONS FOR INSTALLATION OF SHINGLES, DRIP EDGE AND FELT.

PARTS IDENTIFICATION AND SIZES

Part identification letters are stamped on some parts.

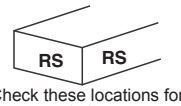

Check these locations for part stamp.

Treated lumber is stamped:

TREATED

WOOD SIZE CONVERSION CHART

Nominal Board Size	Actual Size
2 x 4	1-1/2" x 3-1/2" (3,8 x 8,9 cm)
1 x 4	3/4" x 3-1/2" (1,9 x 8,9 cm)
2 x 3	1-1/2" x 2-1/2" (3,8 x 6,3 cm)
1 x 3	3/4" x 2-1/2" (3,8 x 6,3 cm)

PARTS LIST

INVENTORY YOUR PARTS before you begin.

We suggest sorting parts by the category they are listed in.
Note: Your shed parts will come in multiple boxes - check all.

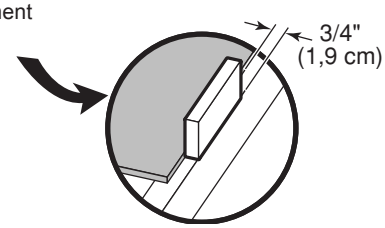

WALLS

- ☐ x1 GAA 1 x 3 x 5" (2,5 x 7,6 x 12,7 cm) Gauge Block for 3/4" (1,9 cm) measurement
- ☐ x5 UY 2 x 4 x 6-1/2" (5,1 x 10,2 x 16,5 cm)
- ☐ x4 UV 2 x 4 x 23-1/4" (5,1 x 10,2 x 59,1 cm)
- ☐ x6 STL 2 x 4 x 44-1/2" (5,1 x 10,2 x 113 cm)
- ☐ x10 SP 2 x 4 x 48" (5,1 x 10,2 x 121,9 cm)
- ☐ x1 7/16" x 3-1/4" x 66-3/4" (1,1 x 8,3 x 169,5 cm) *OSB*
- ☐ x2 AM 2 x 4 x 67" (5,1 x 10,2 x 170,2 cm)
- ☐ x2 YFA 2 x 4 x 68-1/2" (5,1 x 10,2 x 174 cm)
- ☐ x4 TM 2 x 4 x 72" (5,1 x 10,2 x 182,9 cm)
- ☐ x40 AI 2 x 4 x 78-1/2" (5,1 x 10,2 x 199,4 cm)
- ☐ x8 KFB 2 x 4 x 88-11/16" (5,1 x 10,2 x 225,3 cm)
- ☐ x6 TJ 2 x 4 x 92-1/2" (5,1 x 10,2 x 23,5 cm)
- ☐ x10 TP 2 x 4 x 96" (5,1 x 10,2 x 243,8 cm)

TRIM

- ☐ x2 3/8" x 5-7/8" x 48" (1 x 14,9 x 122 cm)
- ☐ x2 3/8" x 4-3/4" x 48" (1 x 12,0 x 122 cm)
- ☐ x4 3/8 x 7-7/8" x 86-3/4" (1 x 20 x 220,3 cm)
- ☐ x2 3/8 x 4-3/4" x 89-1/4" (1 x 12,1 x 226,7 cm)
- ☐ x2 3/8 x 4-3/4" x 89-1/4" (1 x 12,1 x 226,7 cm)
- ☐ x4 3/8 x 5-7/8" x 73" (1 x 14,9 x 185,4 cm)
- ☐ x4 3/8 x 4-3/4" x 80-7/8" (1 x 12,1 x 205,4 cm)
- ☐ x2 3/8 x 4-3/4" x 96" (1 x 12,1 x 243,8 cm)
- ☐ x2 3/8 x 5-7/8" x 96" (1 x 14,9 x 243,8 cm)
- ☐ x4 3/8 x 1-3/4" x 81-7/8" (1,0 x 4,4 x 208 cm)
- ☐ x4 3/8 x 1-3/4" x 82-1/2" (1,0 x 4,4 x 209,6 cm)

RAFTERS

☐ x12 CLA 2 x 4 x 4-7/8" (5,1 x 10,2 x 12,4 cm)

☐ x4 3/8 x 3-1/4 x 5-7/8" (1,0 x 8,3 x 14,9 cm)

☐ x24 6" x 24" (15,2 x 61 cm) **OSB OR WOOD GRAIN** ⚠

☐ x5 WTA 1 x 4 x 84" (2,6 x 10,2 x 213,4 cm)

☐ x26 DNB 2 x 4 x 88-11/16" (5,1 x 10,2 x 225,3 cm)

ROOF PANELS

Roof panels are 7/16" (1,1 cm) thick.

NOTE: Panel parts are not stamped.

☐ x4
7/16 x 47-7/8 x 48"
(1,1 x 121,6 x 121,9 cm)

☐ x4
7/16 x 40-5/8 x 48"
(1,1 x 103,2 x 121,9 cm)

☐ x4
7/16 x 8-1/2 x 88-5/8"
(1,1 x 21,9 x 225,1 cm)

☐ x4
7/16 x 48 x 96"
(1,1 x 121,9 x 243,8 cm)

☐ x4
7/16 x 40-5/8 x 96"
(1,1 x 103,2 x 243,8 cm)

WALL PANELS

☐ x15 ☐ x2 ☐ x1 ☐ x1

x2 x2 x2

DOORS

☐ x1 LEFT DOOR ☐ x1 RIGHT DOOR

☐ x4 AH 19/32" x 3" x 26-5/8" (1,5 x 7,6 x 67,6 cm)

☐ x2 DKA 19/32" x 2-1/2" x 44-1/8" (1,5 x 6,3 x 112,1 cm)

☐ x1 ZJ
19/32" x 3" x 72" (1,5 x 7,6 x 183 cm)

☐ x2 OO
69" Door Stiffener (175,3 cm)

FLOOR FRAMING (IF DIY FLOOR KIT(S) PURCHASED)

☐ **x6** **TREATED** 2 x 4 x 48" (5,1 x 10,2 x 121,9 cm)

☐ **x30** **TREATED** 2 x 4 x 93" (5,1 x 10,2 x 236,2 cm)

☐ **x6** **TREATED** 2 x 4 x 96" (5,1 x 10,2 x 243,8 cm)

FLOOR PANELS (IF DIY FLOOR KIT(S) PURCHASED)

Roof panels are 5/8" (1,6 cm) thick. **NOTE: Panel parts are not stamped.**

☐ **x9** 5/8 x 48" x 96"
(1,6 x 121,9 x 243,8 cm)

FASTENER/HARDWARE BAG

- ☐ **x105** 1-1/2" (3,8 cm)
- ☐ **x351** 2" (5,1 cm)
- ☐ **x211** 3" (7,6 cm)
- ☐ **x24** 2" (5,0 cm)
- ☐ **x77** 1-5/8" (4,1 cm)
- ☐ **x72** 3/4" (1,9 cm)

NOTE:
If you are using a nail gun, nails may be used where screws are shown for quicker assembly. Length of nail must match screw length.

VENT, WINDOW and DOOR HARDWARE

☐ **x6**

☐ **x18**
1" (2,5 cm)

☐ **x2**

x8
#8 x 1" (2,5 cm)
Pan Head Screws

☐ **x2**
Transom Window

☐ **x8**
3/4" (1,9 cm)

☐ **x1**
64" Metal Threshold
3/4" (1,9 cm) x11
Bagged separately / special coating

Handle (locking) with Screws

x2
1-1/4" (3,2 cm)

☐ **x1**

Spring Bolt

☐ **x2**

☐ **x8**
1-1/4 (3,2 cm)
(4 screws in each package)

COMPONENT SECTION INDEX

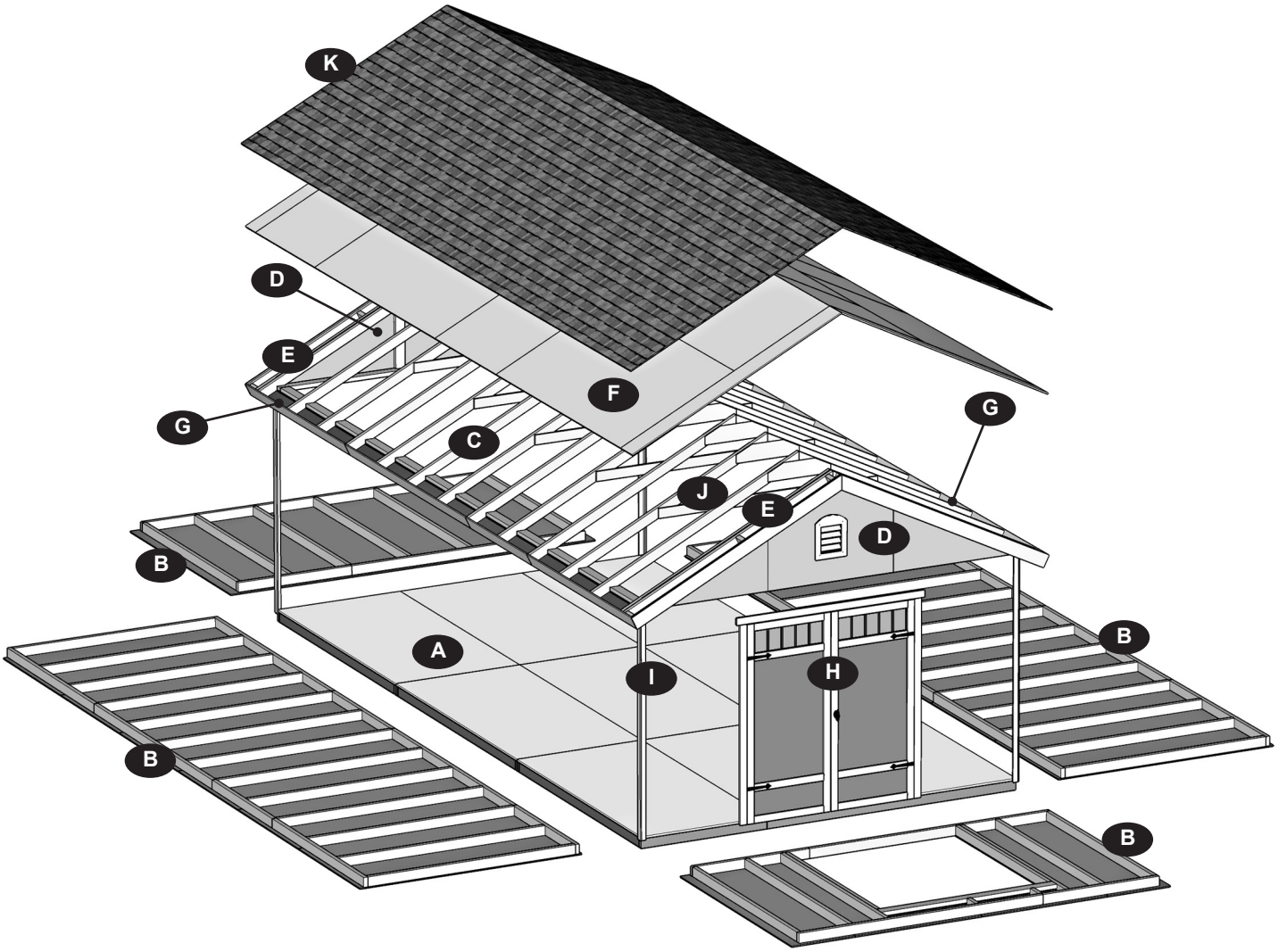

Description	Section	Page
Floor	A	10-15
Walls	B	20
Rafters	C	17-18, 45
Gable Units	D	46, 48
Gable Overhang Ladders	E	47, 49
Roof Panels	F	50
Soffit & Fascia Trim	G	54-57
Doors	H	58
Corner Trim	I	67
Collar Ties	J	68
Shingles	K	72
Windows	Separate Kit	

CONCRETE FOUNDATION

If you choose to install your kit on a concrete slab refer to the diagram below.

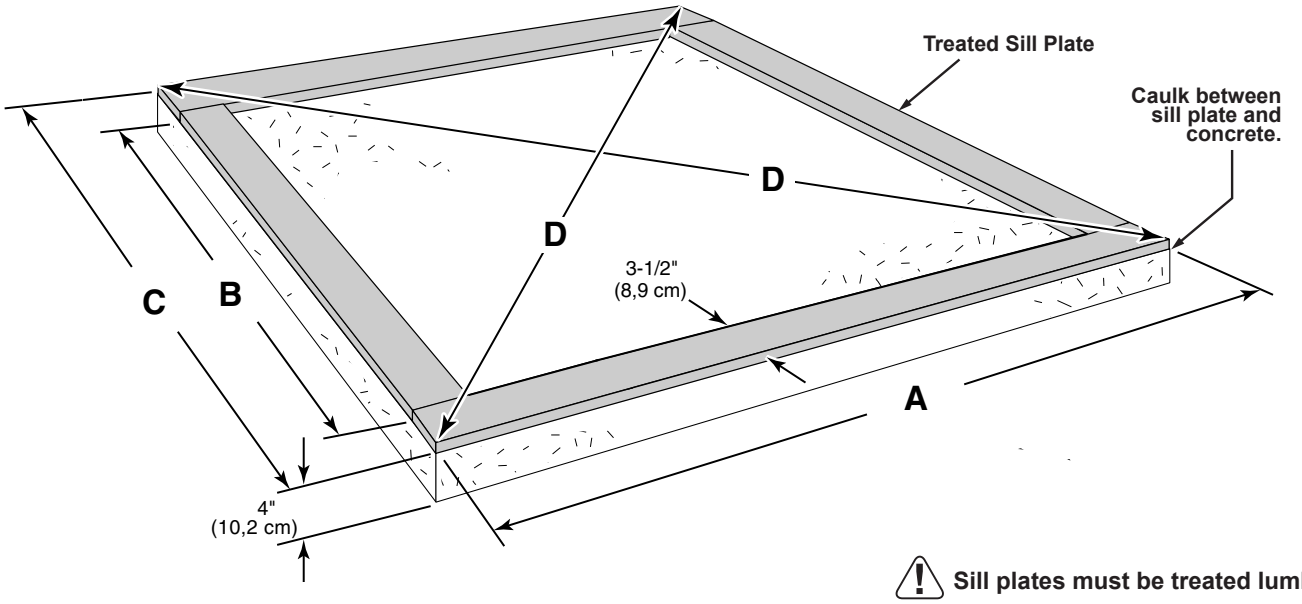

Sill plates must be treated lumber.

Building Size	Actual Floor Size	A	B	C	D
12' x 24' (304,8 x 731,5 cm)	12' x 24' (304,8 x 731,5 cm)	144" (365,8 cm)	281" (713,7 cm)	288" (731,5 cm)	322" (817,8 cm)

12' x 24' Building Requires:

- ☐ **x2 2 x 4 x 12' (5,1 x 10,2 x 365,8 cm)**
- ☐ **x1 Caulk**
- ☐ **x2 2 x 4 x 16' (5,1 x 10,2 x 487,7 cm)**
- ☐ **x2 2 x 4 x 96" (5,1 x 10,2 x 243,8 cm)**
  Cut to: 89" (226,1 cm)

Allow new concrete slabs to cure for at least seven (7) days.

- **A treated 2 x 4 (5,1 x 10,2 cm) sill plate is required when installing your shed on concrete. Purchase full length treated lumber, or butt shorter pieces end-to-end and seal seams with caulk.**
- **Use a high quality exterior grade caulk beneath all sill plates.**
- **Fasten 2 x 4 (5,1 x 10,2 cm) sill plates to slab using approved concrete anchors (fasteners not included).**
- **Check local code for concrete foundation requirements.**

FLOOR FRAME (IF DIY FLOOR KIT(S) PURCHASED)

PARTS REQUIRED:

x132 — 3" (7,6 cm)

x6 — TREATED — 2 x 4 x 48" (5 x 10 x 122 cm)

NOTE: Look for TREATED Stamp.

x30 — TREATED — 2 x 4 x 93" (5 x 10 x 236,2 cm)

x6 — TREATED — 2 x 4 x 96" (5 x 10 x 243,8 cm)

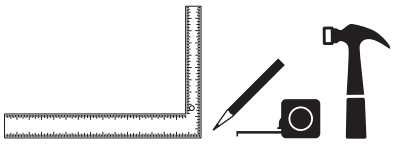

Build three identical floor sections.

✓BEGIN

1 Arrange parts as shown on flat surface. Measure and mark each dimension from end of boards. Secure with (2) 3" nails at each mark and (4) nails at seams.

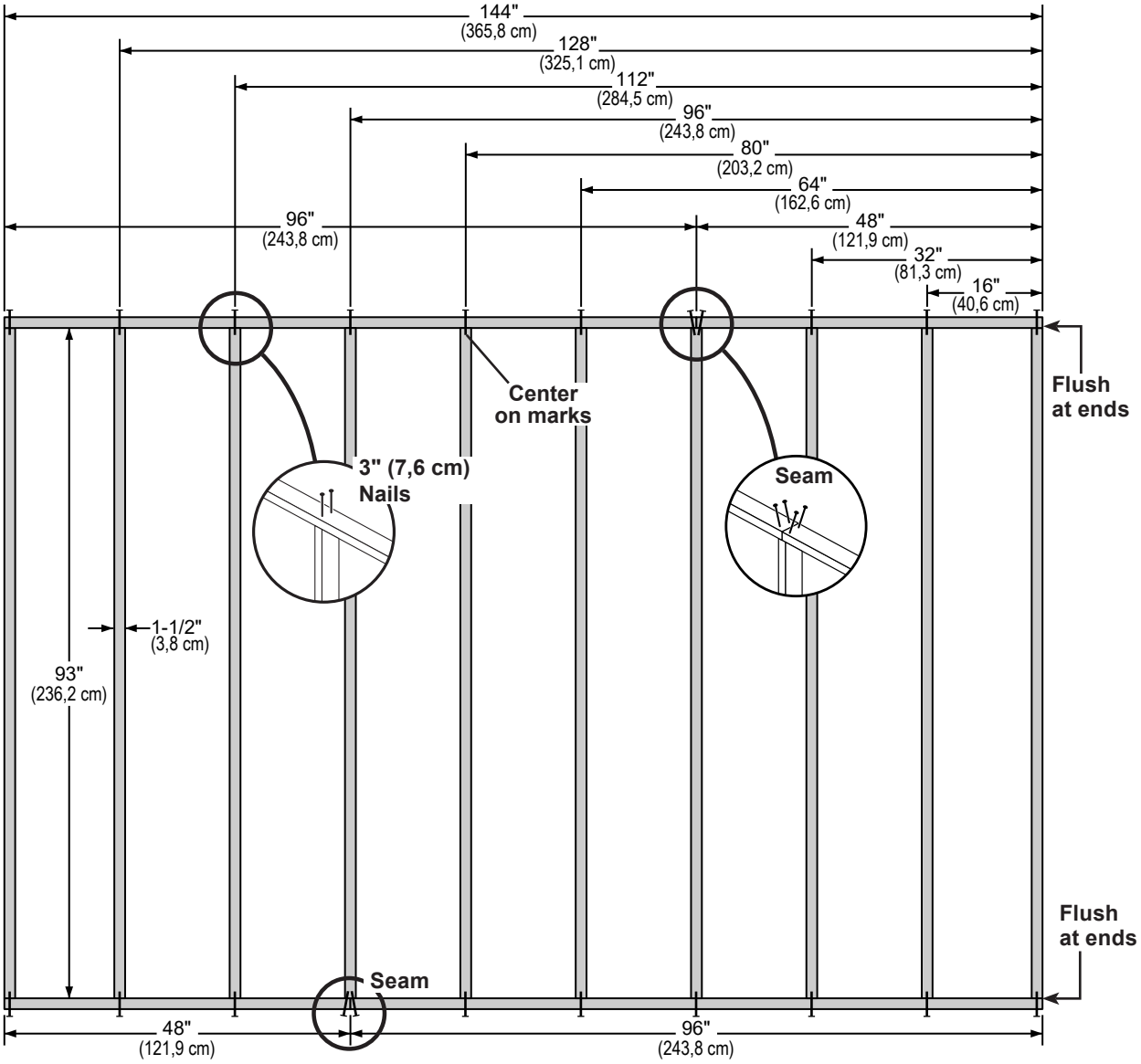

Repeat assembly steps to build your 2nd and 3rd floor section.

FLOOR FRAME (IF DIY FLOOR KIT(S) PURCHASED)

PARTS REQUIRED:

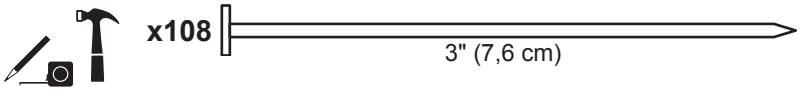

2 Fasten (3) floor sections together, as shown. Secure with 3" nails.

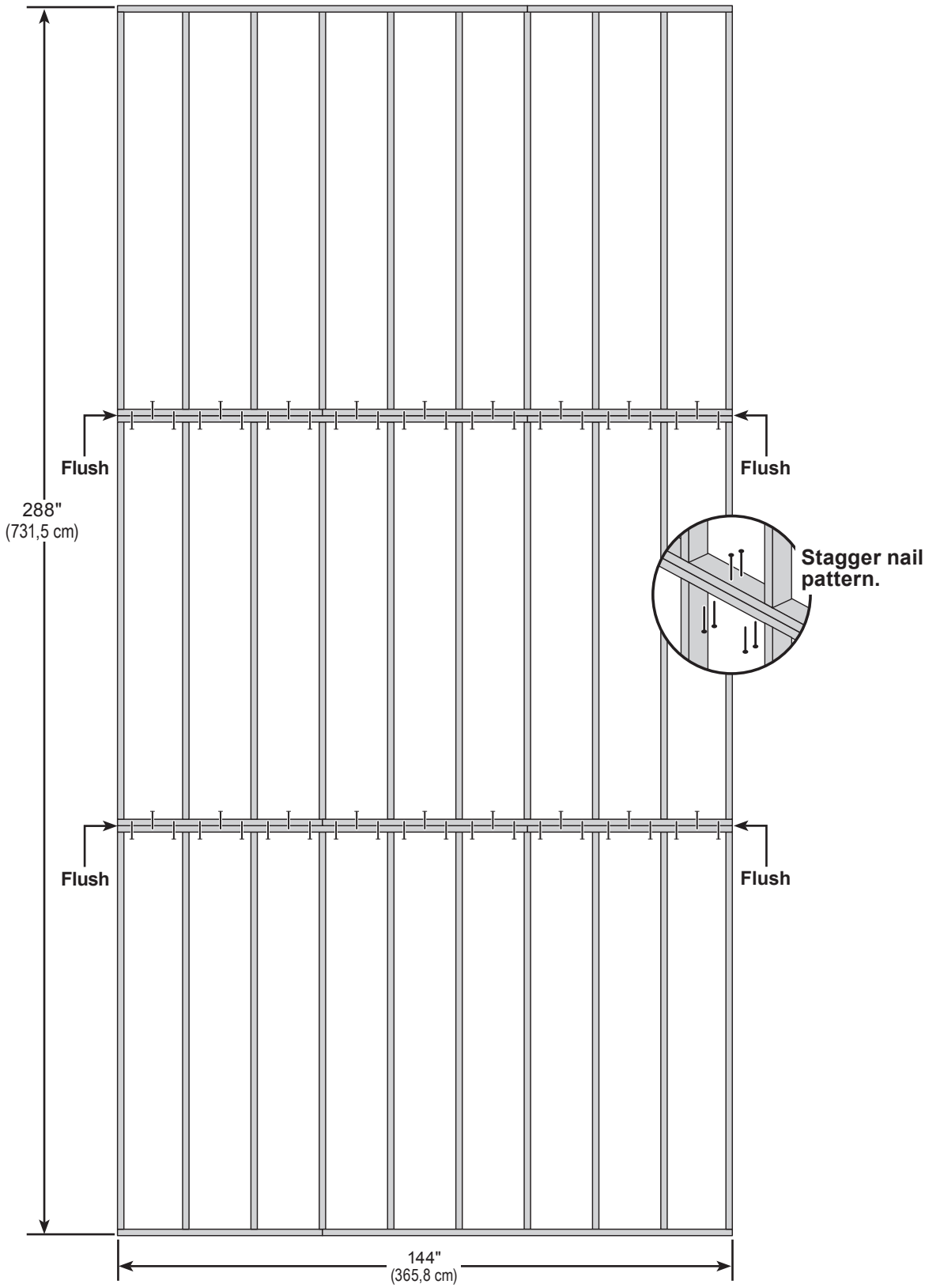

FINISH

Your floor frame is now assembled. Proceed to level and square frame.

LEVEL AND SQUARE FLOOR FRAME

STOP! **Before attaching floor decking, it is important to level and square the floor frame. A level and square floor frame is required to correctly construct your shed.** **STOP!**

BEGIN

1. ⚠ See page 13 for the preferred floor leveling method.

2. Use a level and check that the frame is level before installing floor panels.

3. Check for frame squareness by measuring diagonally across corners. If the measurements are the same, the frame is square. The diagonal measurement will be approximately 322" (817,9 cm).

4. After the frame is level and square, secure one side of frame to 4x4 runners using one fastener at ends of each runner. At the opposite end of the frame, secure the frame to 4x4 runners with one fastener at the ends of each runner, ensuring that the frame remains square.
   Fasten the frame to the 4x4 runners with (2) 3" screws at each connection **(Fig. A).**

Fig. A

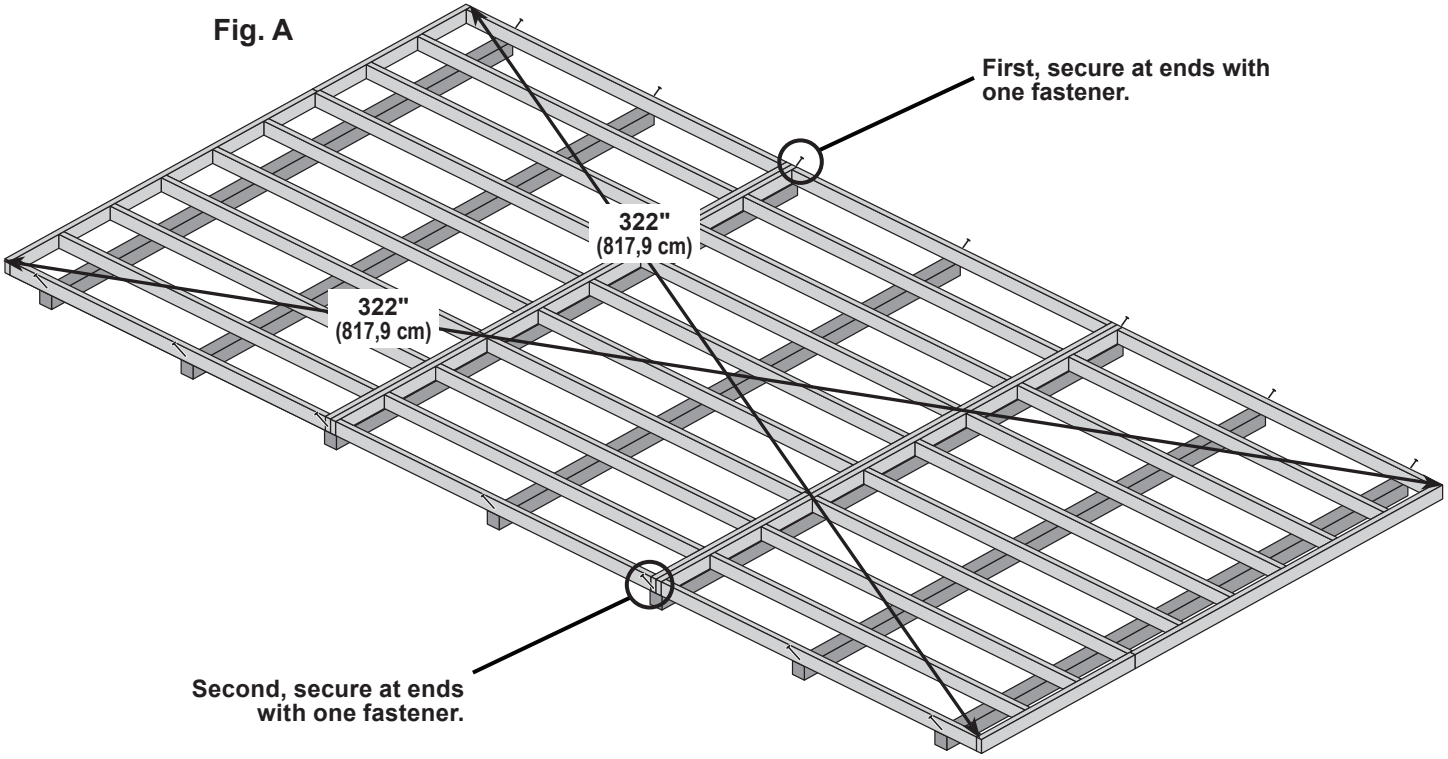

FINISH

Your floor frame is now square and level.

OPTIONAL WOOD FRAME FLOOR LEVELING OPTIONS

There are multiple ways to level your floor frame. Our recommended leveling method is shown below.
Leveling materials are not included in this kit.

PREFERRED METHOD - 4x4 TREATED RUNNERS

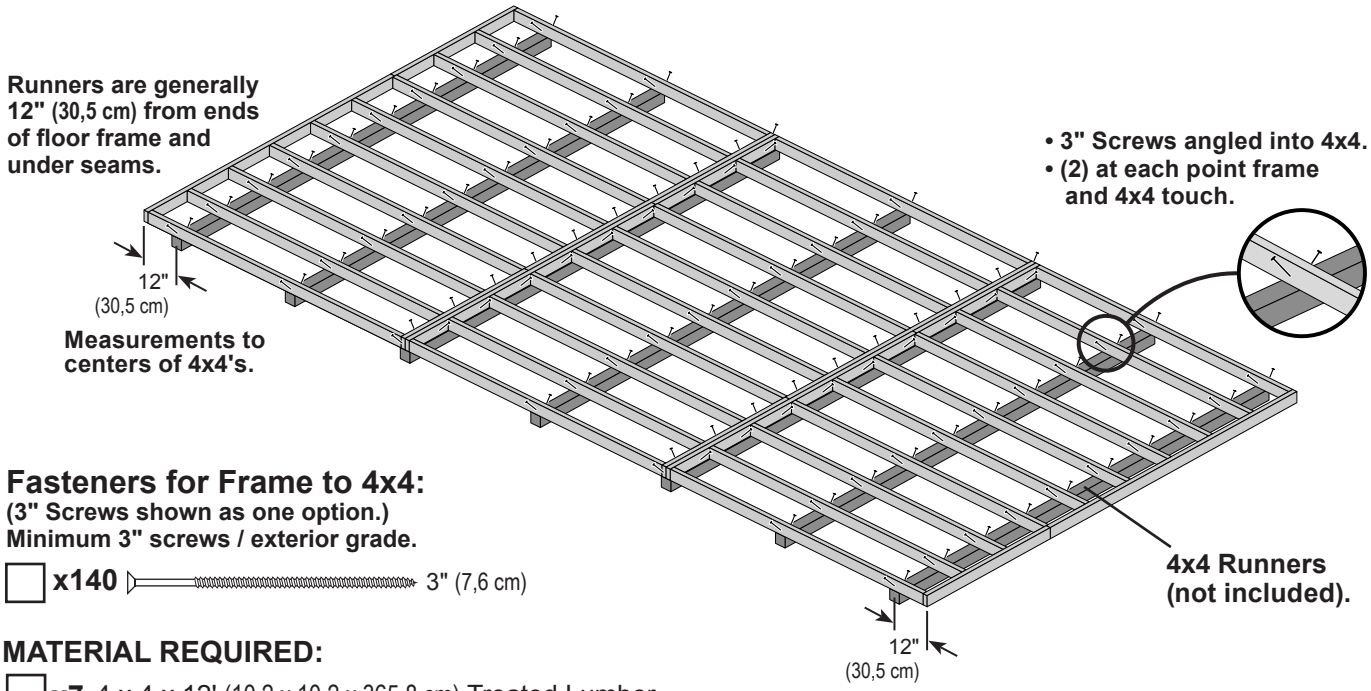

Fasteners for Frame to 4x4:

(3" Screws shown as one option.)
Minimum 3" screws / exterior grade.

☐ **x140** 3" (7,6 cm)

MATERIAL REQUIRED:

☐ **x7** 4 x 4 x 12' (10,2 x 10,2 x 365,8 cm) Treated Lumber

⚠ **Use only wood treated for ground contact and fasteners approved for use with treated wood.**

⚠ **Always support frame seams.**

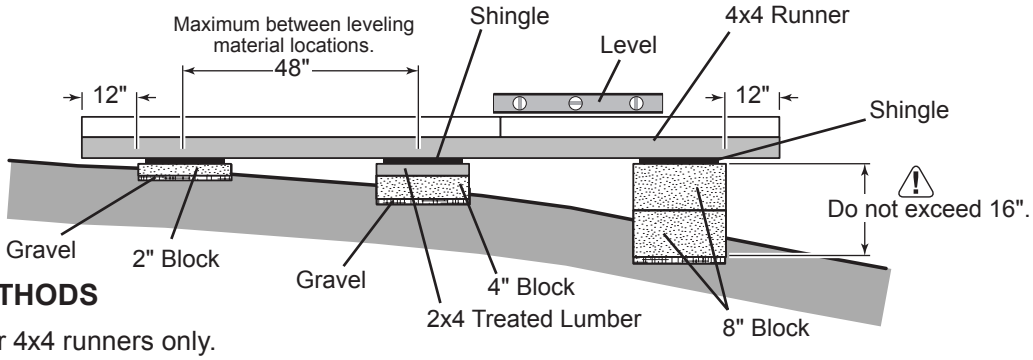

LEVELING METHODS

- Level under 4x4 runners only.
- Locate leveling material 12" from ends of runners and no more than 48" apart.
- Asphalt shingles should be used between 4x4 runners and blocks or treated lumber. Never use shingles in direct contact with ground.
- For best results and aiding in water drainage use gravel under each concrete block.

LEVELING MATERIALS

☐ Gravel

☐ Solid Masonry Blocks in 1", 2", 4" or 8" thickness

☐ 2x4 Treated Lumber

☐ Asphalt Shingles

⚠ **Leveling higher than 16" not recommended.**

CONCRETE

- If you are building your shed on a concrete foundation see page 9.

FLOOR PANELS (IF DIY FLOOR KIT(S) PURCHASED)

PARTS REQUIRED:

x3 5/8 x 48 x 96" (1,6 x 121,9 x 243,8 cm)

GAA 3/4" GAUGE BLOCK

x12 2" (5,1 cm)

Install floor panels with the rough side facing up (painted grid lines).

✓BEGIN

1 Install (1) **48" x 96"** panel on one of the 96" x 144" floor frame sections, edge flush to the seam between the floor frames and 3/4" along the floor joist.
Use the GAA gauge block for the 3/4" measurement.
Secure panel with (1) 2" nail in the first two corners on inner bond board, as shown.

2 Move to the opposite side. Using the long edge of the panel as a lever, move the panel side-to-side until the loose corner is flush to the floor frame. Secure panel with (2) more nails in the opposite corners.

Repeat steps to install the next (2) 48" x 96" panel.

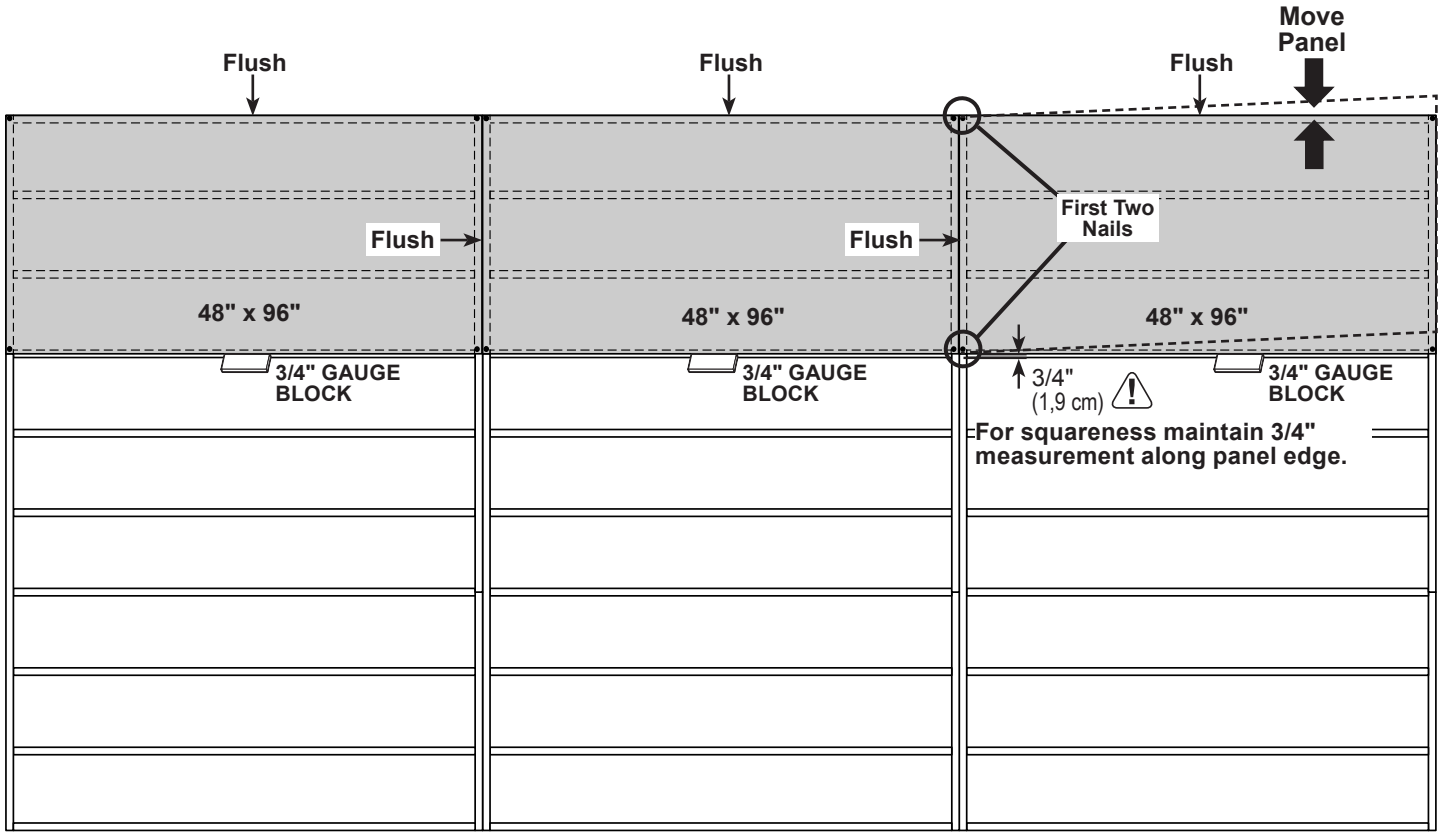

FLOOR PANELS (IF DIY FLOOR KIT(S) PURCHASED)

PARTS REQUIRED:

x546 — 2" (5,1 cm)

x6 — 5/8 x 48 x 96" (1,6 x 121,9 x 243,8 cm)

GAA — 3/4" GAUGE BLOCK

3 Continue installing the remaining panels in the following order:
1. 48 x 96" (A)
2. 48 x 96" (B)

Secure panels with (1) 2" nail in each corner. All panels should be flush, as shown.

4 Ensure the floor is square by measuring diagonally across the frame corners. If the measurements are the same your floor frame is square. The measurement will be approximately 322" (817,9 cm).

5 Continue securing all panels with 2" nails spaced 6" apart on edges and 12" apart inside panel.

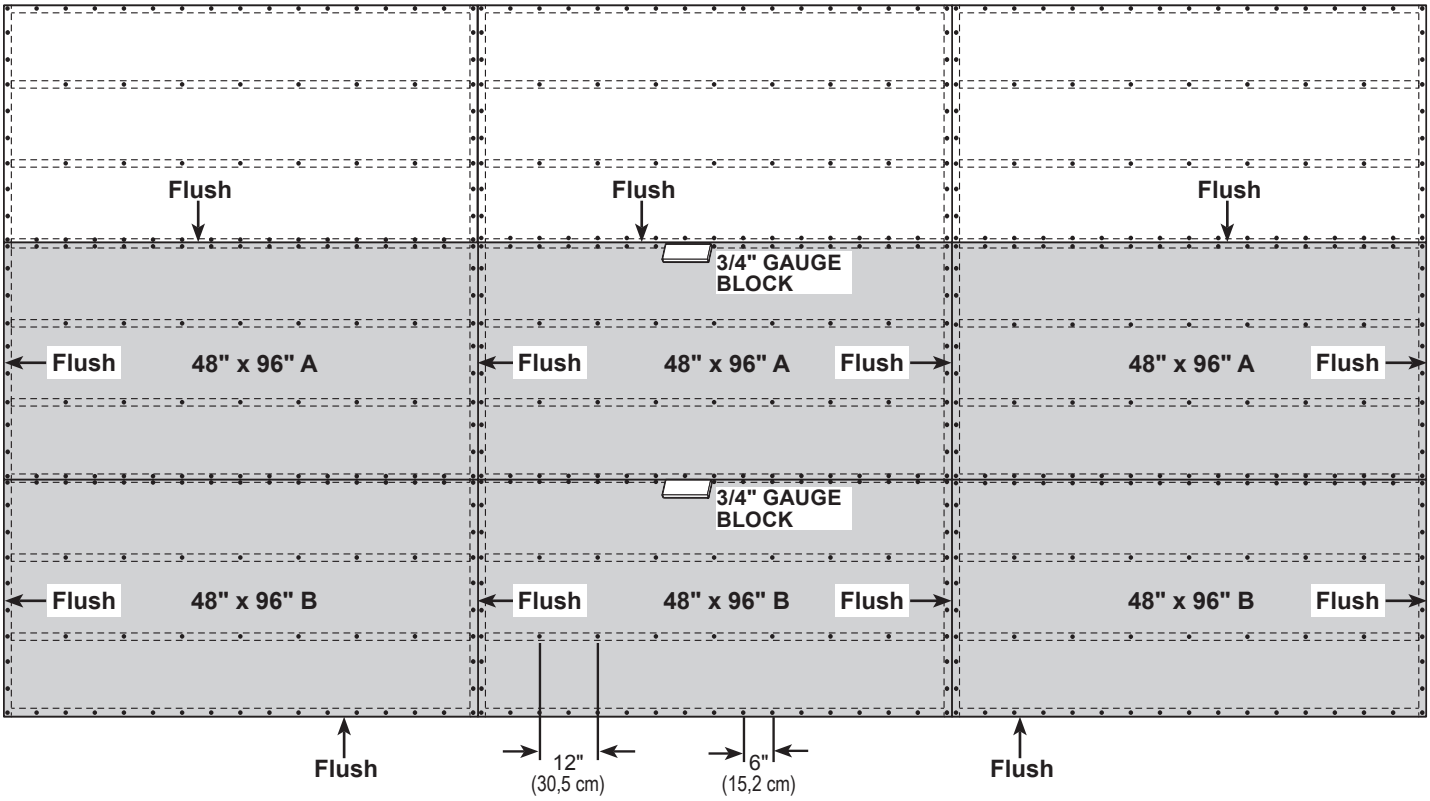

FINISH

Your floor panels are now installed.

IMPORTANT!

STOP!

Ensure that the floor frame is level after installing floor panels.
Re-level if necessary.

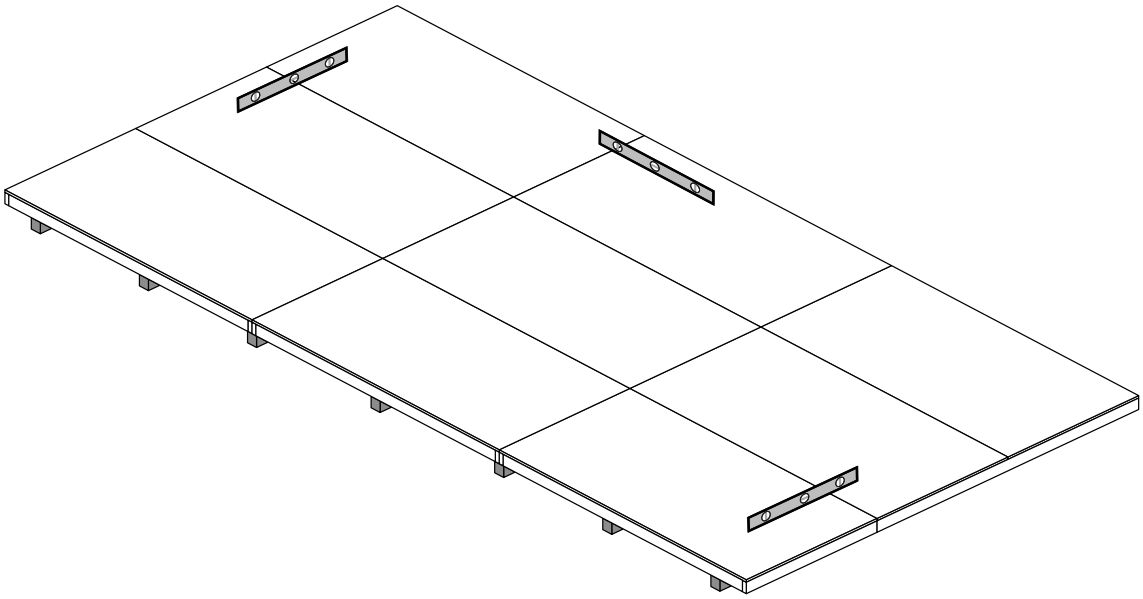

HINT:

- **The floor should used as a stable work surface for wall construction.**
- **Organize your assembly procedure during the build process to avoid over-handling of the walls.**

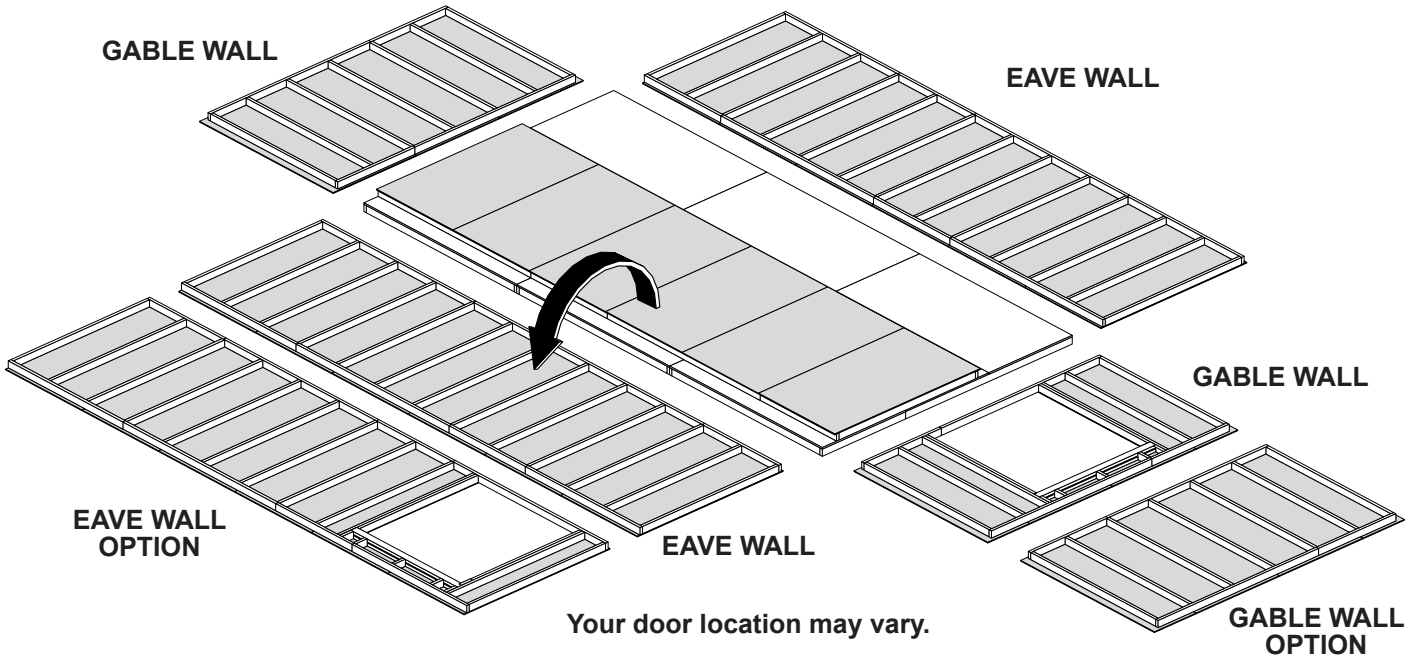

RAFTER ASSEMBLY

PARTS REQUIRED:

x2 **CLA** 2 x 4 x 4-7/8" (5,1 x 10,2 x 12,4 cm)

x4 3" (7,6 cm)

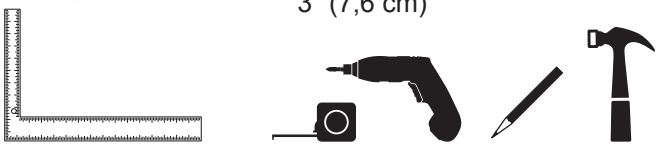

Build a rafter jig using the floor and (2) CLA parts.

✓BEGIN

1 Secure (1) **CLA** flush to the floor deck with (2) 3" screws **(Fig. A)**.
Measure over 144-3/4" (367,7 cm) and install a second **CLA** flush to the floor deck.
Secure with (2) 3" screws.

Fig. A

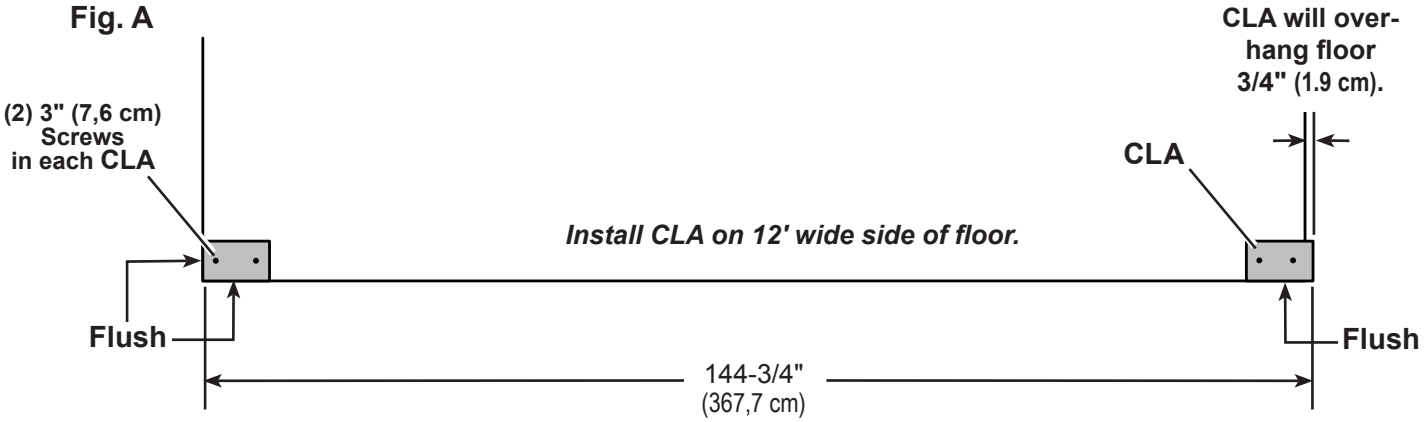

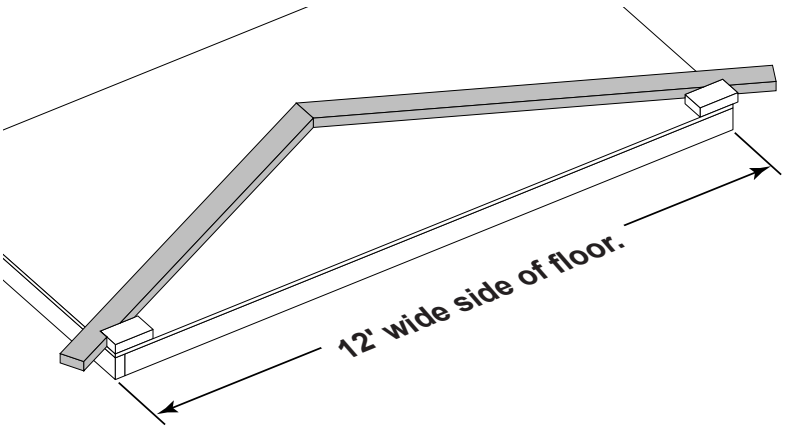

RAFTER ASSEMBLY

PARTS REQUIRED:

x24 OSB OR WOOD GRAIN

x26 DNB
2 x 4 x 88-11/16" (5,1 x 10,2 x 225,3 cm)

x262 2" (5,1 cm)

x26 1-5/8" (4,1 cm)

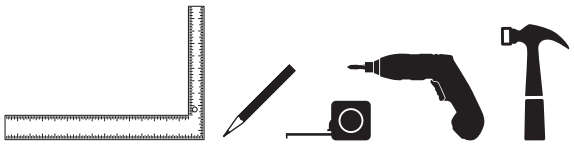

BEGIN

1 Place (2) rafters **DNB** into the jig, as shown.

2 Press **DNB** firmly against the outside of **CLA**'s, as shown **(Fig. A)** and push rafters tight to the middle. Rafters should touch (flush) at peak **(Fig. A)**.

Place gusset onto **DNB** with a 1/4" gap from edge **(Fig. A)** while holding rafters in place. Secure gusset with (1) 1-5/8" screw into each rafter.

HINT: These screws will help hold the measurements when you nail on gussets.

Secure the gusset to the rafters with (10) 2" nails in the pattern shown **(Fig. A)**.

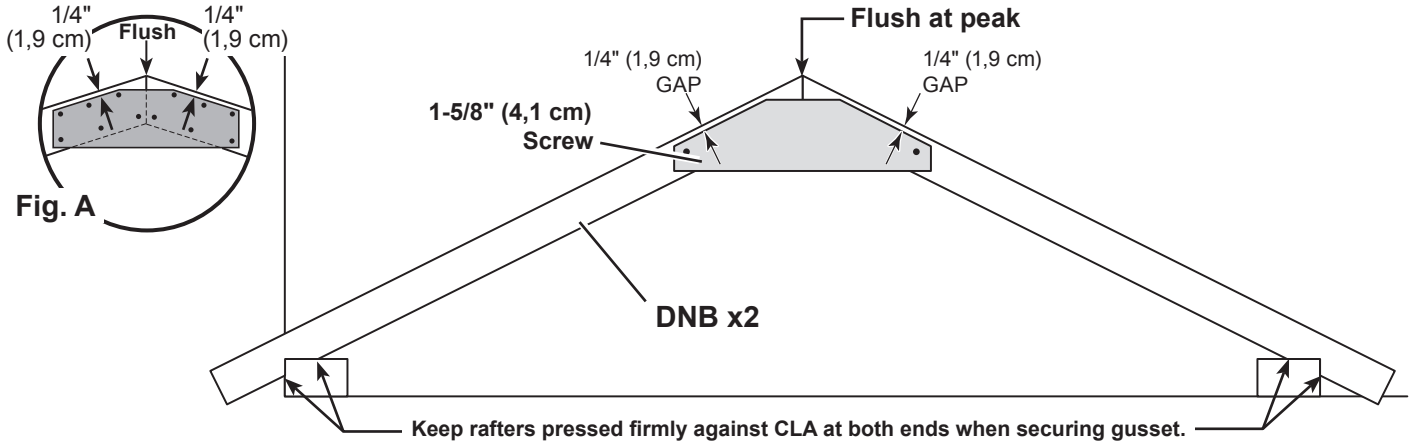

3 Flip over rafter assembly and fasten a 2nd gusset with 2" nails **(Fig. A, Fig. B)**.
No need to use the jig for the 2nd gusset.

Repeat steps 1-3 to build (10) ADDITIONAL rafters with (2) gussets (Fig. B).

4 Repeat steps 1 and 2 to build (2) rafters with only (1) gusset **(Fig. C)**

Fig. B - ***Build 11***

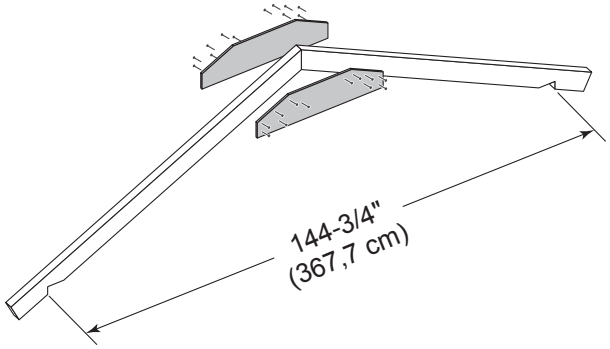

Fig. C - ***Build 2***

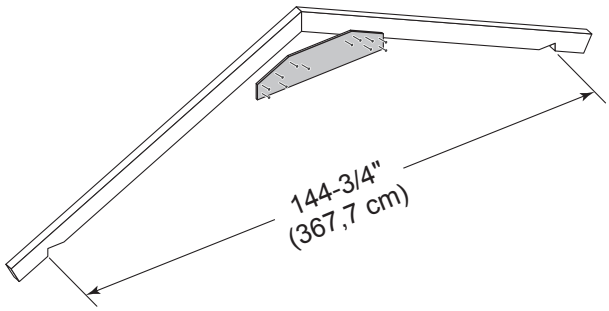

FINISH

Your rafters are now assembled.

WALL INDEX

Create your own style of shed. Choose your door location.
Use this guide to find the corresponding wall construction and installation pages.

IMPORTANT! Build your door header before building any walls (see next page).

⚠ ***After assembling the walls for your 12' x 24' shed, go to page 40 for wall installation.***

Door on Gable Wall

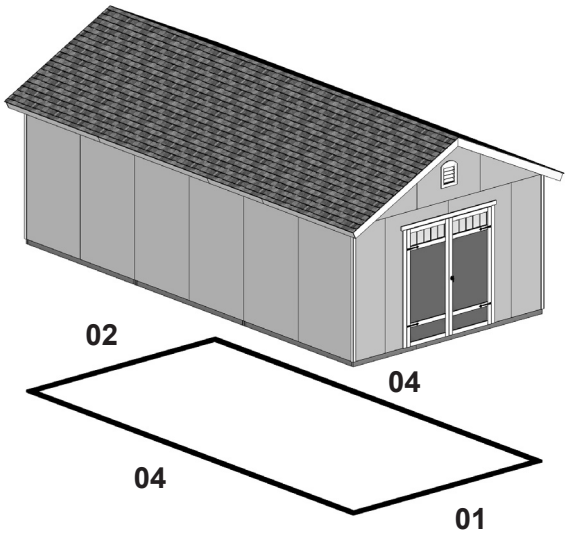

Wall 01: Page 23
Wall 02: Page 25
Wall 04: Page 29 (Build 2 eave walls)

Eave Door w/ Right Offset

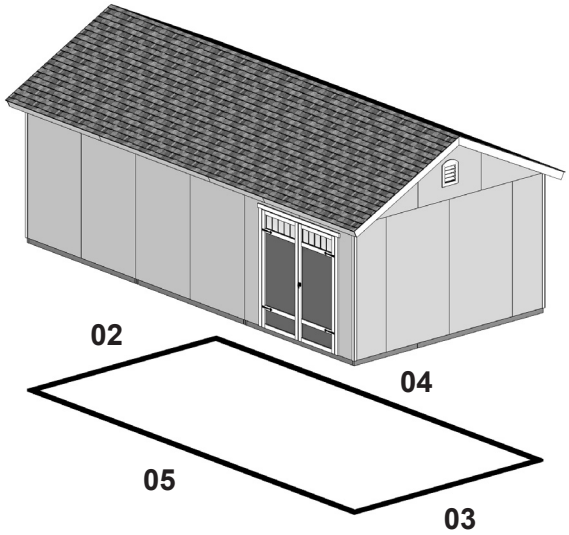

Wall 02: Page 25
Wall 03: Page 27
Wall 04: Page 29
Wall 05: Page 31

Eave Door w/ Left Offset

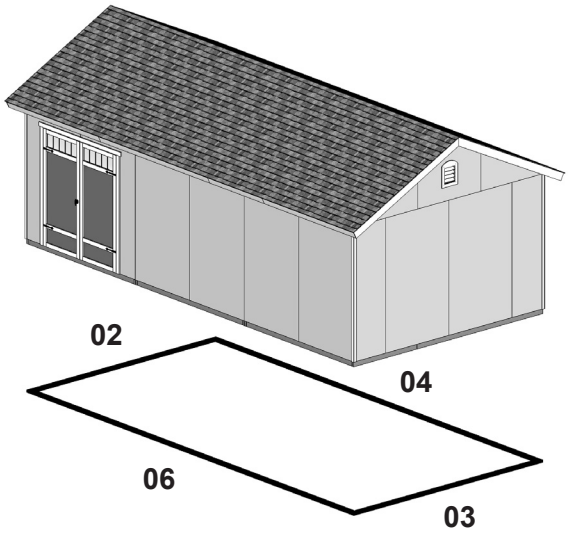

Wall 02: Page 25
Wall 03: Page 27
Wall 04: Page 29
Wall 06: Page 34

Eave Door Centered

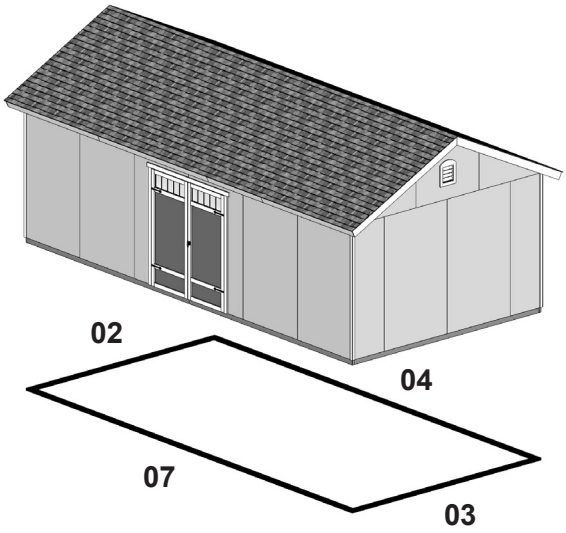

Wall 02: Page 25
Wall 03: Page 27
Wall 04: Page 29
Wall 07: Page 37

DOOR FRAME UNIT

STOP!

Assemble the door frame unit before building any walls!

Any wall with a door will require this assembly.

STOP!

PARTS REQUIRED:

x2 **AM**
2 x 4 x 67" (5,1 x 10,2 x 170,2 cm)

x1
7/16 x 3-1/4 x 66-3/4" (1,1 x 8,3 x 170,2 cm) *OSB*

x18
3" (7,6 cm)

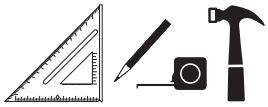

Pre-assemble the door header.

✓BEGIN

1 Place (1) **AM** and *OSB* end-to-end on flat surface, flush in middle.
Center ***OSB*** on top of **AM**.

Fasten together with 3" nails in the pattern shown.

2 Flip header assembly over and nail as shown on the other side.

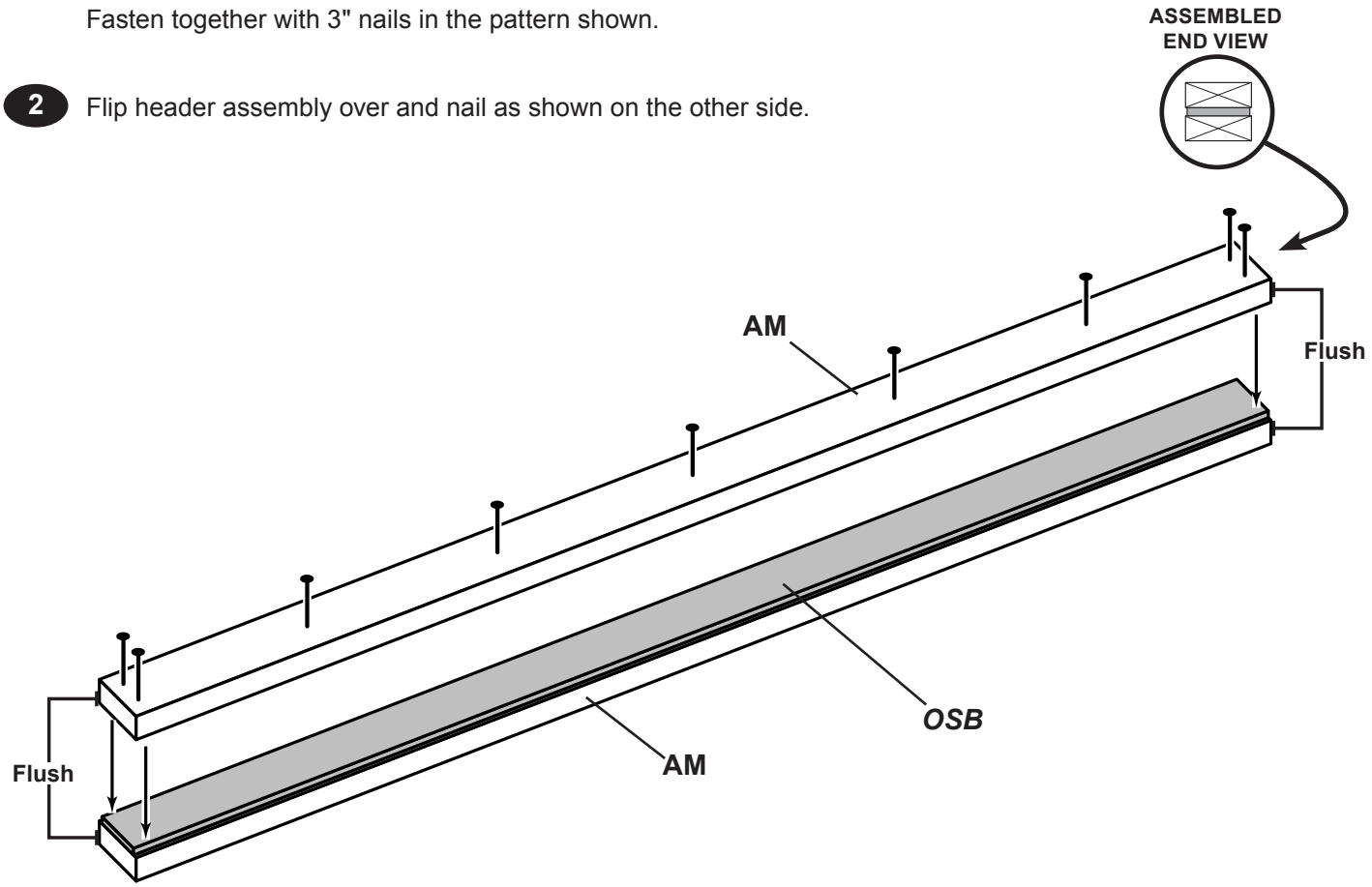

DOOR FRAME UNIT

PARTS REQUIRED:

x5 UY
2 x 4 x 6-1/2" (5,1 x 10,2 x 16,5 cm)

x2 YFA
2 x 4 x 68-1/2" (5,1 x 10,2 x 174 cm)

x2 AI
2 x 4 x 78-1/2" (5,1 x 10,2 x 199,4 cm)

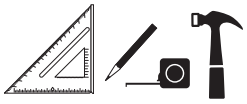

x28 3" (7,6 cm)

x6 3" (7,6 cm)

x1 Assembled Header

3 Arrange parts on edge on floor, as shown. Measure and mark from end of boards.
Orient **Assembled Header** on flat side **(Fig. A)**.
Secure with (2) 3" nails at each connection.

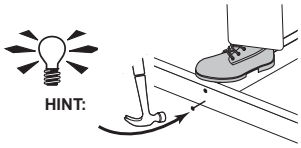

4 Fasten (3) middle parts **UY** to **Pre Assembled Header** with (2) 3" screws **(Fig. B)**.
Secure parts **UY** to top plates with (2) 3" nails at each connection and (4) 3" nails at seam.

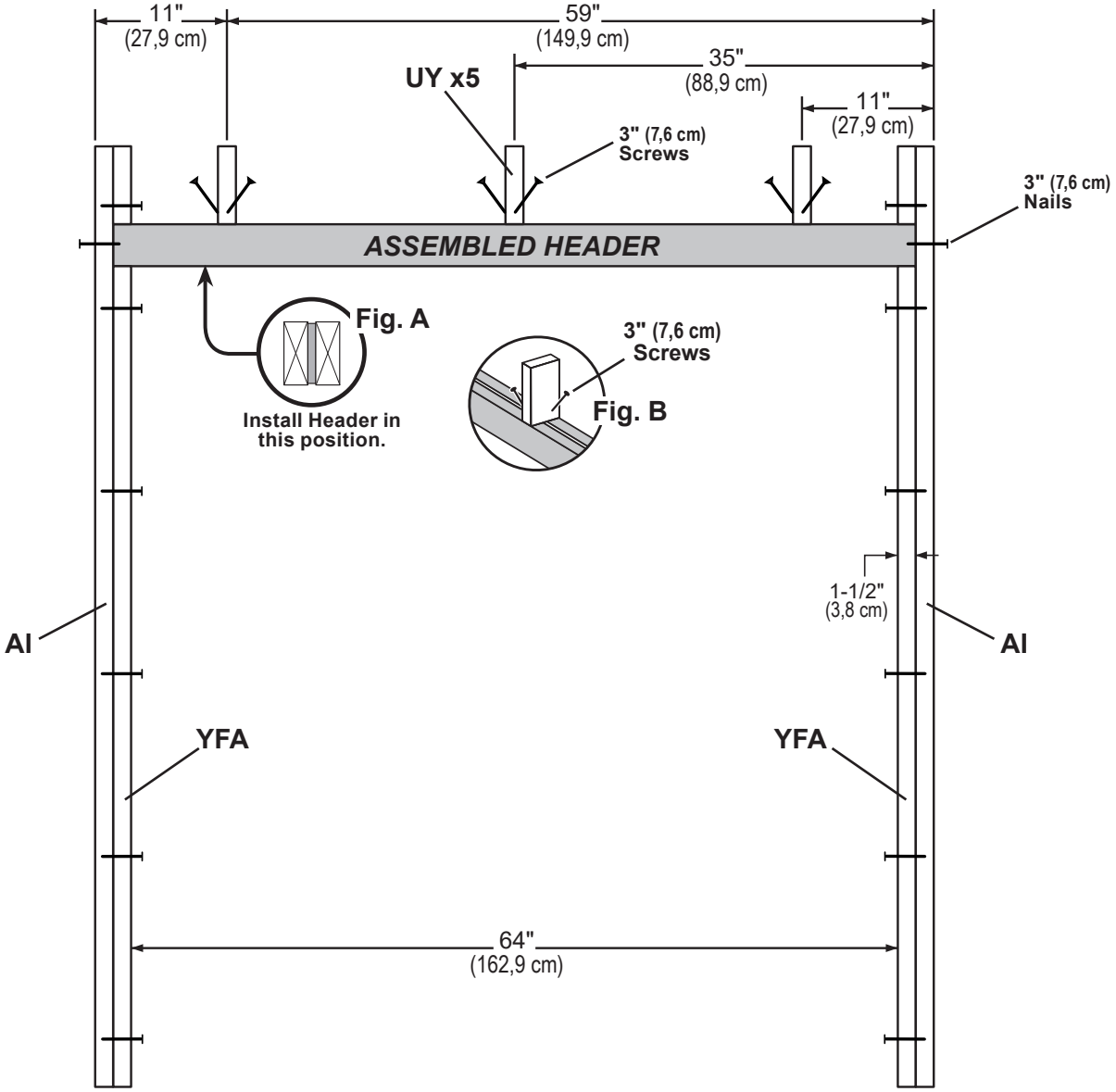

FINISH

Your door frame unit is now assembled.

WALL PANEL INSTALLATION HINTS & EXAMPLES

PARTS REQUIRED:

x1 3/8 x 48 x 84"
(1 x 121,9 x 213,4 cm)

3/4" GAUGE BLOCK

2x4 TEMP. SPACER

x40

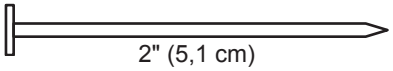

2" (5,1 cm)

Ensure your wall is square by installing one panel and squaring frame.

Install all wall panels with the primed side facing up.

✓BEGIN

1 Place (1) **48" x 84"** panel on the wall frame, as shown.
Locate the panel 1-1/2" above the top plate.
Use a 2x4 as a gauge block for the 1-1/2" top overhang measurement.
Use the **GAA** gauge block to mark the 3/4" side measurement on the wall stud.
Secure panel with (2) 2" nails in the corners **(Fig. A).**

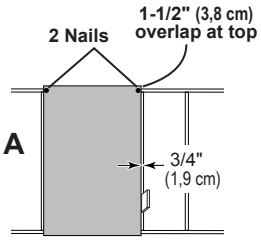

Fig. A

2 Move to the opposite end. Using the long edge of the panel as a lever, move the panel side-to-side until you have a 3/4" measurement on the wall stud.
Secure corner with (2) 2" nails **(Fig. B)**.
Secure panel with 2" nails spaced 6" apart on edges and 12" apart inside panel.

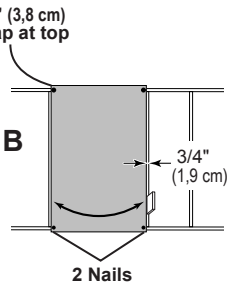

Fig. B

For squareness maintain 1-1/2" and 3/4" measurement along panel edges.

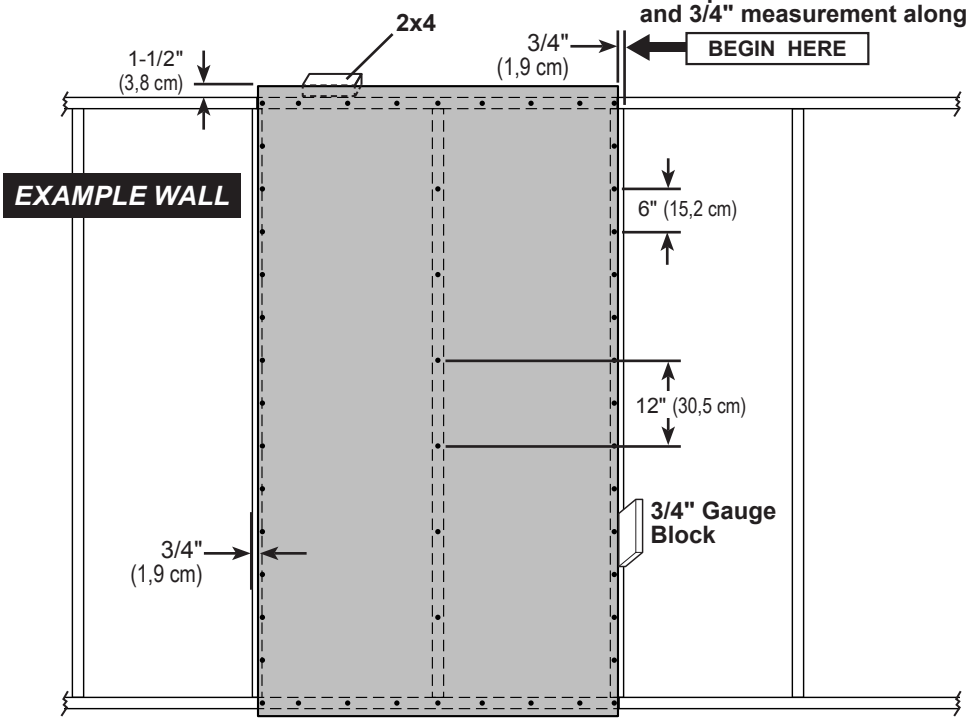

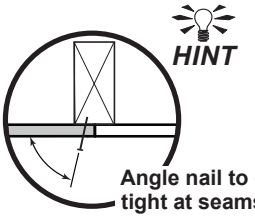

Angle nail to draw panels tight at seams.

12' WALL - 01

PARTS REQUIRED:

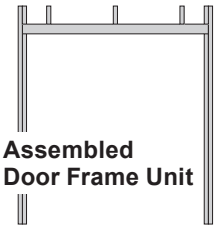

Assembled Door Frame Unit

x40 — 3" (7,6 cm)

x2 **TJ** — 2 x 4 x 92.1/2" (5,1 x 10,2 x 234,9 cm)

x4 **AI** — 2 x 4 x 78-1/2" (5,1 x 10,2 x 199,4 cm)

x2 **STL** — 2 x 4 x 44-1/2" (5,1 x 10,2 x 113 cm)

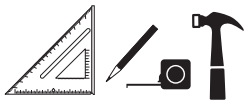

✓BEGIN

1

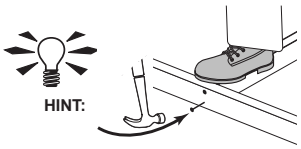

Arrange parts on edge on floor, as shown. Measure and mark from end of boards.
Place the **Door Frame Unit** at measurements shown.
Secure parts with (2) 3" nails at each connection and (4) 3" nails at seams.

137" (348 cm)
116-1/2" (295,9 cm)
102-3/4" (261 cm)
92-1/2" (235 cm)
68-1/2" (174 cm)
44-1/2" (113 cm)
34-1/4" (87 cm)
20-1/2" (52,1 cm)
44-1/2" (113 cm)
STL
TJ
Flush
Flush
DOOR FRAME UNIT
1-1/2" (3,8 cm)
Seam
78-1/2" (199,4 cm)
AI x4
64" (162,6 cm)
TJ
STL
Flush
Flush
92-1/2" (235 cm)
44-1/2" (113 cm)

12' WALL 01

PARTS REQUIRED:

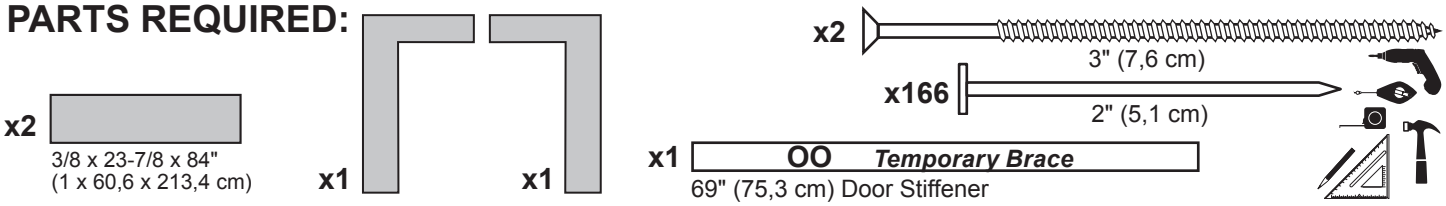

2

Install the left panel 1-1/2" from the top plate.
Use a 2x4 spacer for consistent measurement.
Secure panel with 2" nails spaced 6" apart on edges.

3

Install the right panel flush to installed panel, as shown.
Ensure 64" (162,8 cm) door measurement.
Use part **OO** as a temporary brace. Secure with (2) 3" screws.

Secure panels with 2" nails spaced 6" apart on edges.

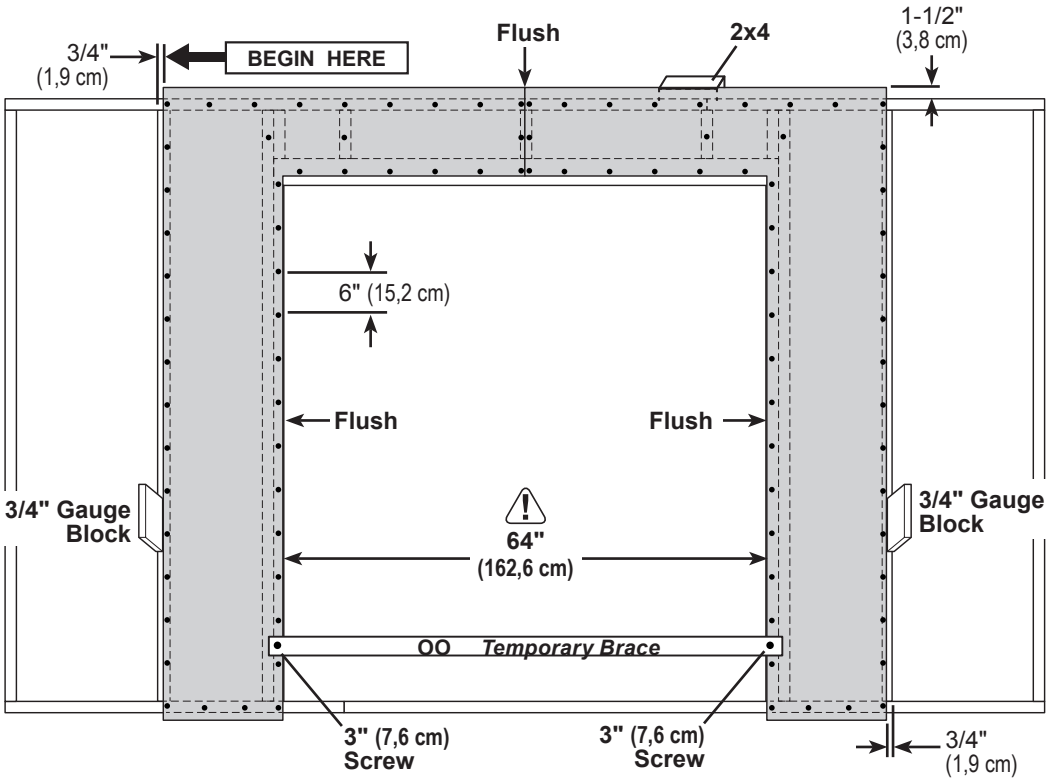

4

Install (2) **23-7/8" x 84"** panels flush to installed panels and 1-1/2" from the top plate.

Secure panels with 2" nails spaced 6" apart on edges.

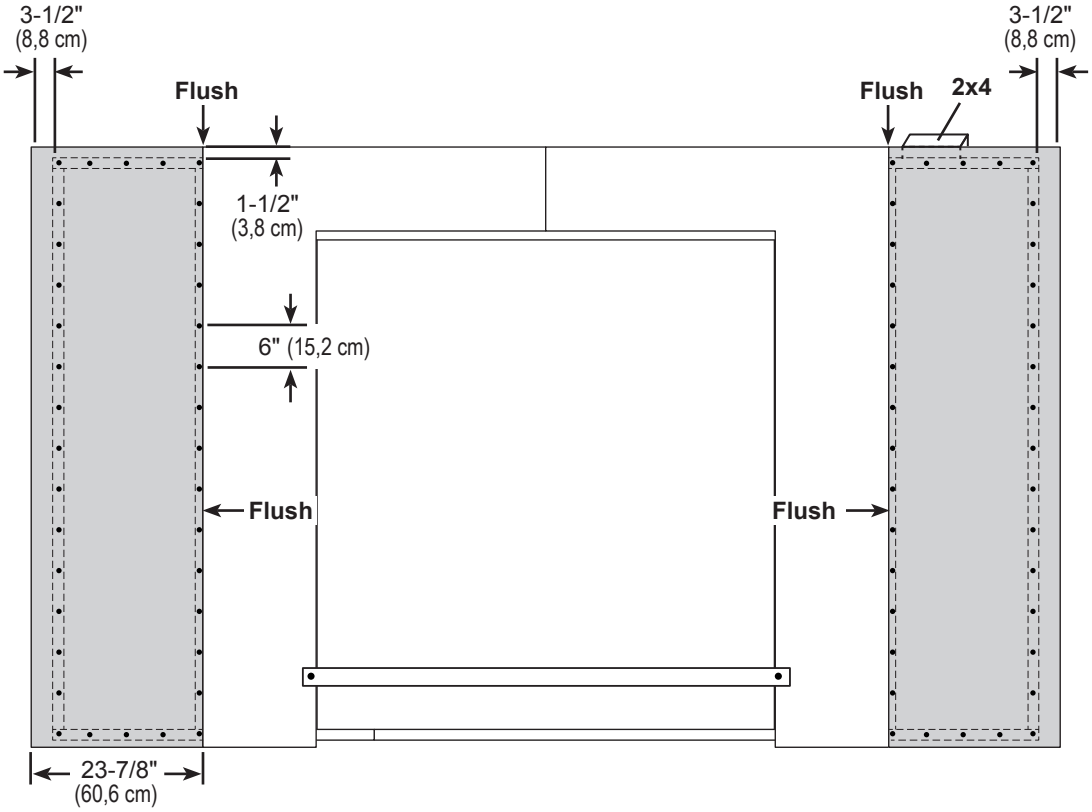

FINISH

Your 12' wall 01 is now assembled.
Carefully flip the wall over.

12' WALL 02

PARTS REQUIRED:

x32 3" (7,6 cm)

x2 **STL**
2 x 4 x 44-1/2" (5,1 x 10,2 x 113 cm)

x7 **AI**
2 x 4 x 78-1/2" (5,1 x 10,2 x 199,4 cm)

x2 **TJ**
2 x 4 x 92-1/2 " (5,1 x 10,2 x 234,9 cm)

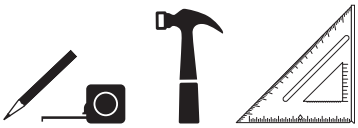

✓BEGIN

1 Arrange parts on edge on floor. Measure and mark from end of boards. Secure with (2) 3" nails at each connection and (4) 3" nails at seams.

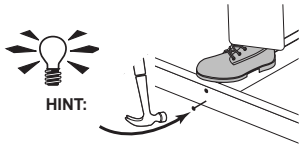

137" (347,9 cm)
116-1/2" (295,9 cm)
92-1/2" (234,9 cm)
68-1/2" (173,9 cm)
44-1/2" (113 cm)
92-1/2" (234,9 cm)
20-1/2" (52 cm)
Flush
Seam
STL
TJ
Flush
3" (7,6 cm) Nails
1-1/2" (3,8 cm)
78-1/2" (199,4 cm)
AI x7
Seam
TJ
STL
Flush
92-1/2" (234,9 cm)
44-1/2" (113 cm)
Flush

12' WALL 02

PARTS REQUIRED:

x150 2" (5,1 cm)

x3 48 x 84" (121,9 x 213,4 cm)

2

Install (1) **48" x 84"** panel 1-1/2" from the top plate.

Use a 2x4 spacer for consistent measurement.

Secure panel with 2" nails spaced 6" apart on edges and 12" inside panel.

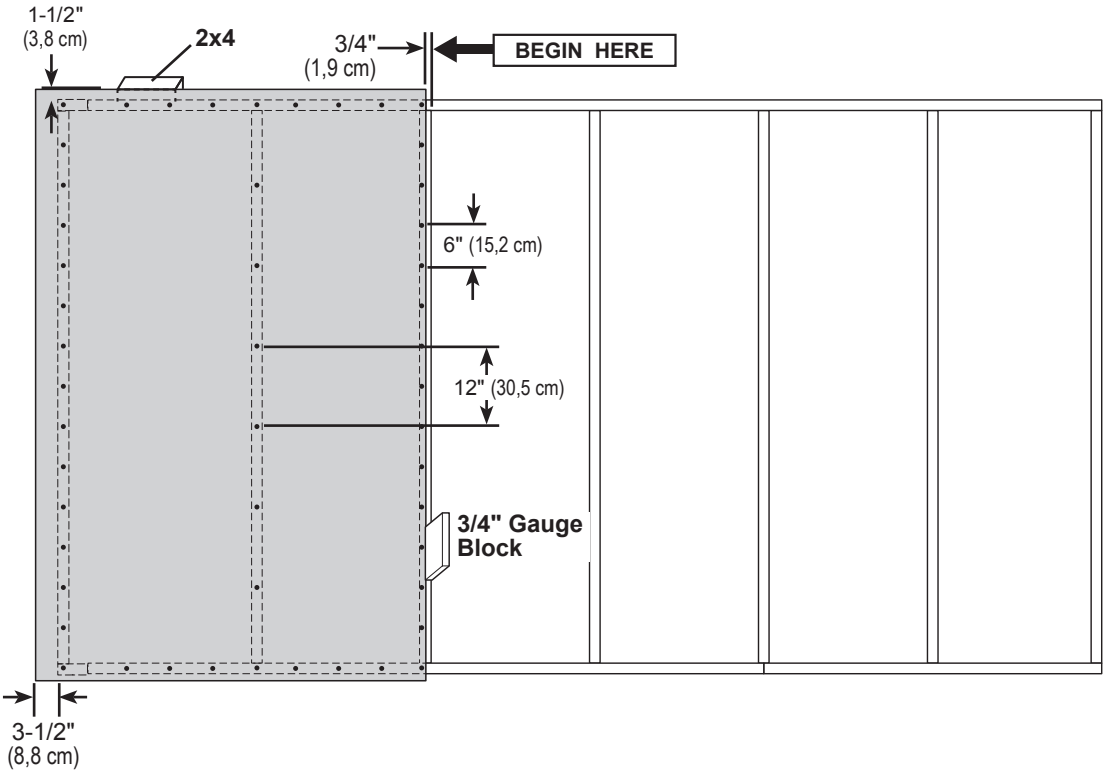

3

Install (2) **48" x 84"** panels flush to installed panels.

Locate panels 1-1/2" from the top plate.

Secure with 2" nails spaced 6" apart on edges and 12" apart inside panel.

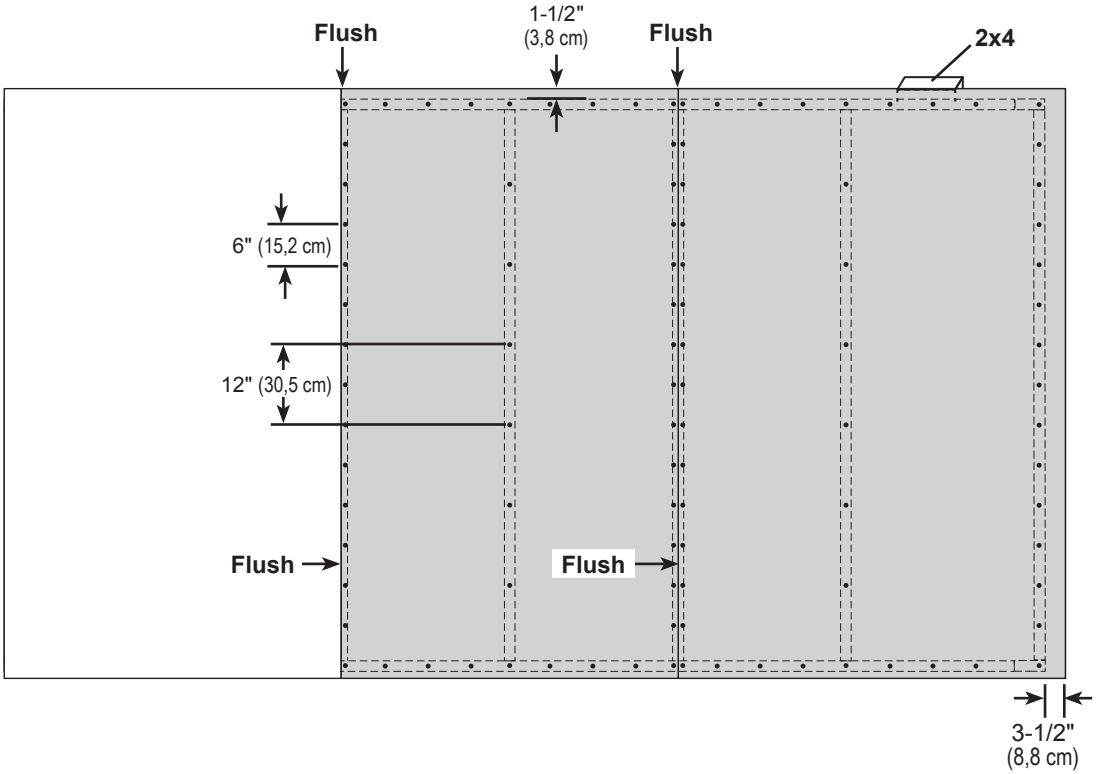

FINISH

Your 12' wall 02 is now assembled.

Carefully flip the wall over.

12' WALL 03

PARTS REQUIRED:

x32 3" (7,6 cm)

x2 **STL**
2 x 4 x 44-1/2" (5,1 x 10,2 x 113 cm)

x7 **AI**
2 x 4 x 78-1/2" (5,1 x 10,2 x 199,4 cm)

x2 **TJ**
2 x 4 x 92-1/2" (5,1 x 10,2 x 234,9 cm)

✓BEGIN

1 Arrange parts on edge on floor. Measure and mark from end of boards. Secure with (2) 3" nails at each connection and (4) 3" nails at seams.

HINT:

137" (347,9 cm)
116-1/2" (295,9 cm)
92-1/2" (234,9 cm)
68-1/2" (173,9 cm)
44-1/2" (113 cm)
92-1/2" (234,9 cm)
20-1/2" (52 cm)
Flush
Seam
STL
TJ
Flush
3" (7,6 cm) Nails
1-1/2" (3,8 cm)
78-1/2" (199,4 cm)
AI x7
Seam
TJ
STL
Flush
92-1/2" (234,9 cm)
44-1/2" (113 cm)
Flush

12' WALL 03

PARTS REQUIRED:

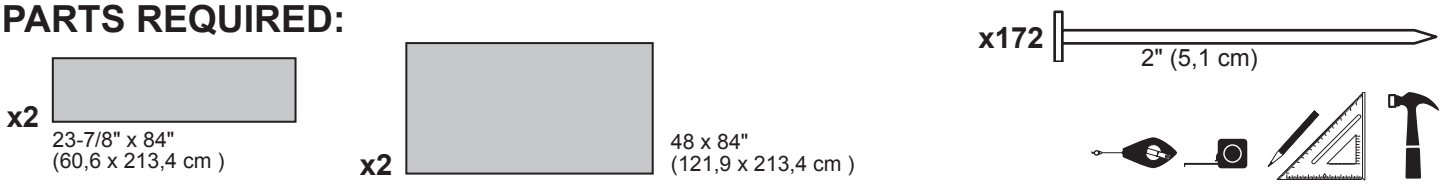

2

Install (1) **48" x 84"** panel 1-1/2" from the top plate.

Use a 2x4 spacer for consistent measurement.

Secure panel with 2" nails spaced 6" apart on edges and 12" inside panel.

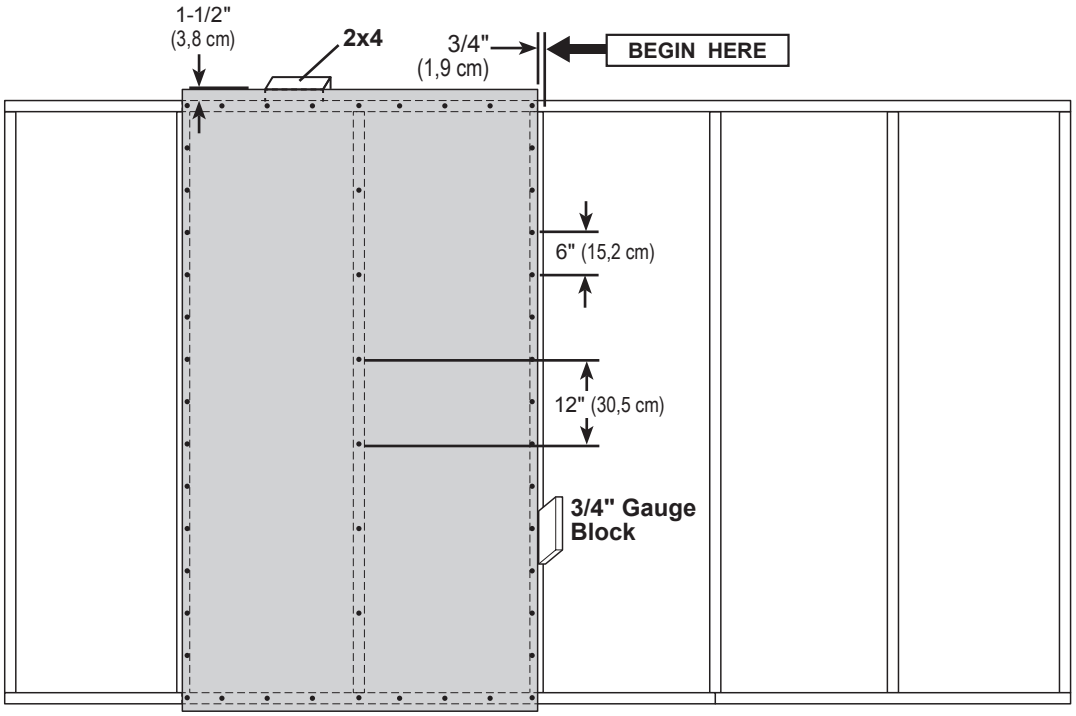

3

Install (1) **48" x 84"** and (2) **23-7/8" x 84"** panels flush to installed panels.

Locate panels 1-1/2" from the top plate.

Secure with 2" nails spaced 6" apart on edges and 12" apart inside panel.

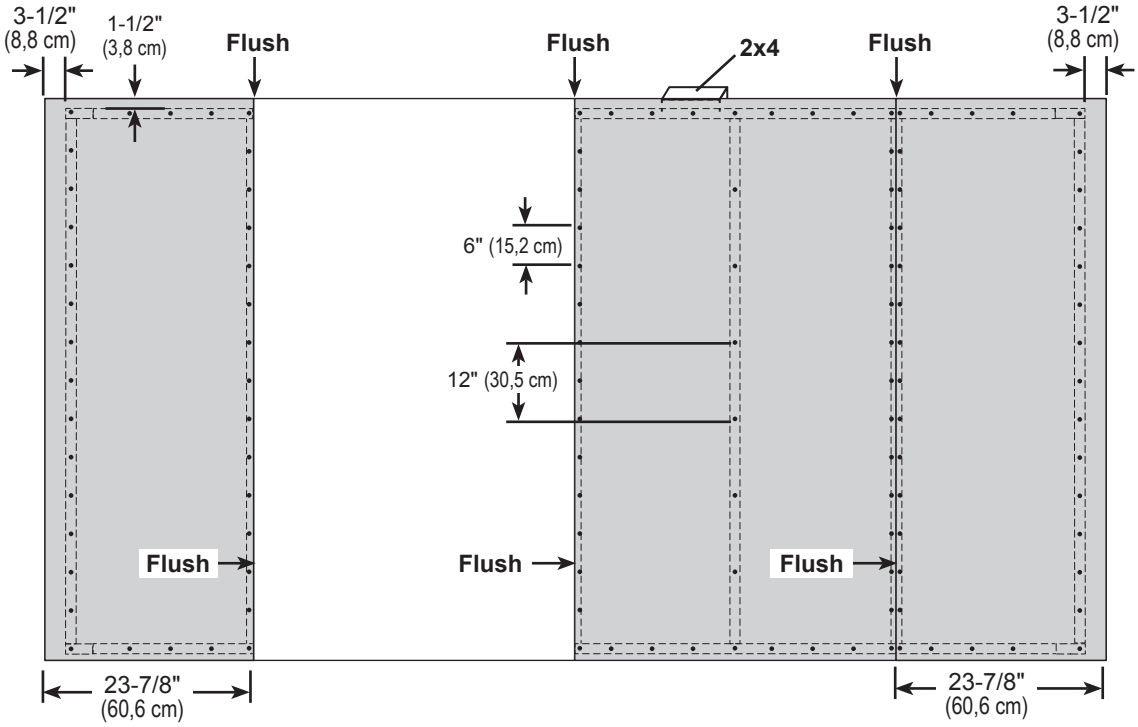

FINISH

Your 12' wall 03 is now assembled.

Carefully flip the wall over.

24' WALL 04

PARTS REQUIRED:

x64 — 3" (7,6 cm)

x3	SP	2 x 4 x 48" (5,1 x 10,2 x 121,9 cm)
x2	TM	2 x 4 x 72" (5,1 x 10,2 x 182,8 cm)
x13	AI	2 x 4 x 78-1/2" (5,1 x 10,2 x 199,4 cm)
x3	TP	2 x 4 x 96" (5,1 x 10,2 x 243,8 cm)

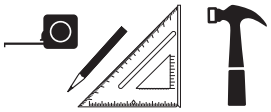

✓BEGIN

1 Arrange parts on edge on floor. Measure and mark from end of boards. Secure with (2) 3" nails at each connection and (4) 3" nails at seams.

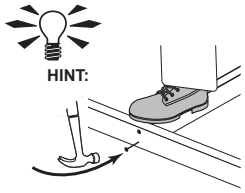

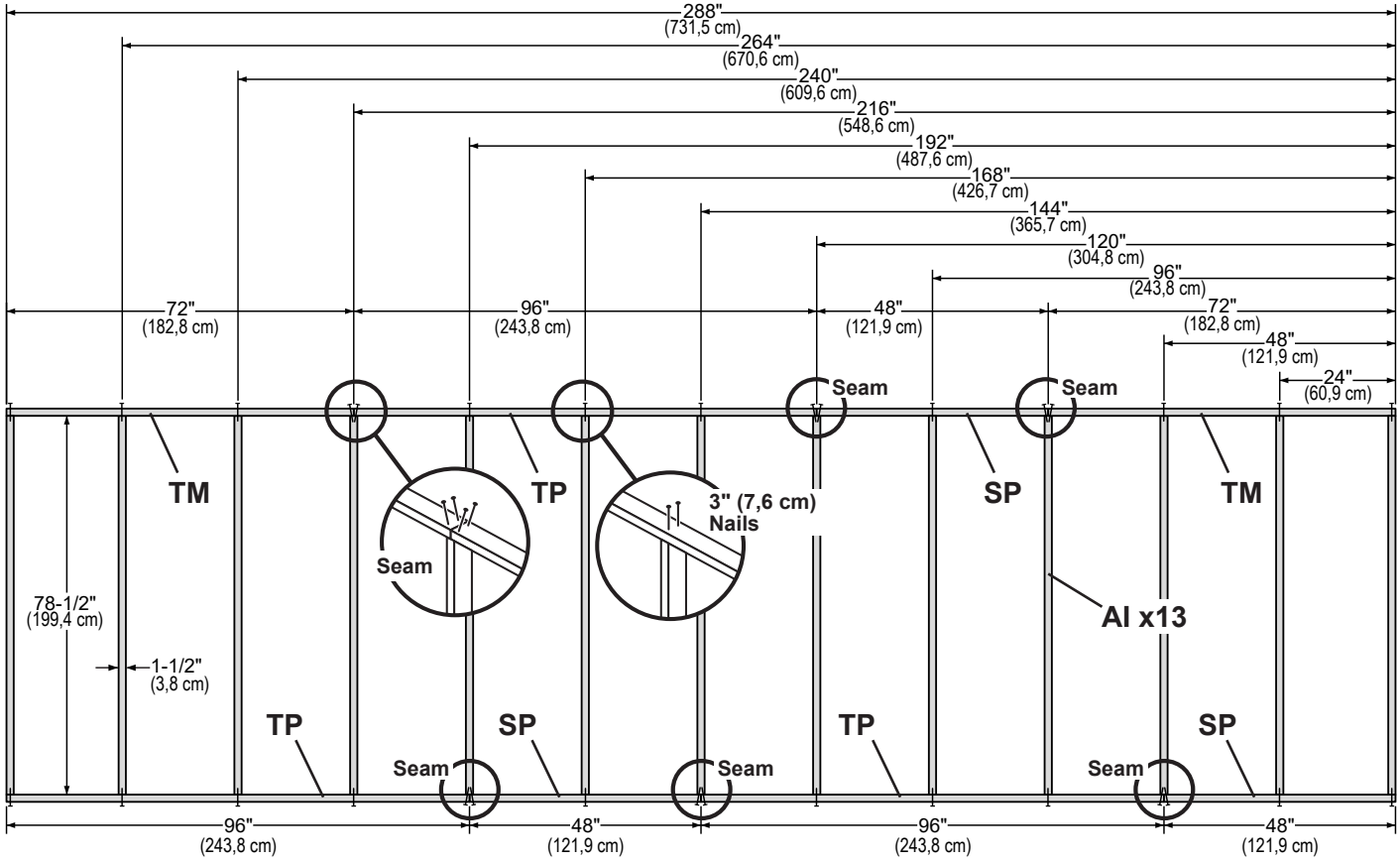

24' WALL 04

PARTS REQUIRED:

x300 2" (5,1 cm)

x6 48 x 84" (121,9 x 213,4 cm)

Install panels with the primed side facing up.

2 Install (1) **48" x 84** panel 1-1/2" from the top plate. Use a 2x4 spacer for consistent measurement. Secure panel with 2" nails spaced 6" apart on edges.

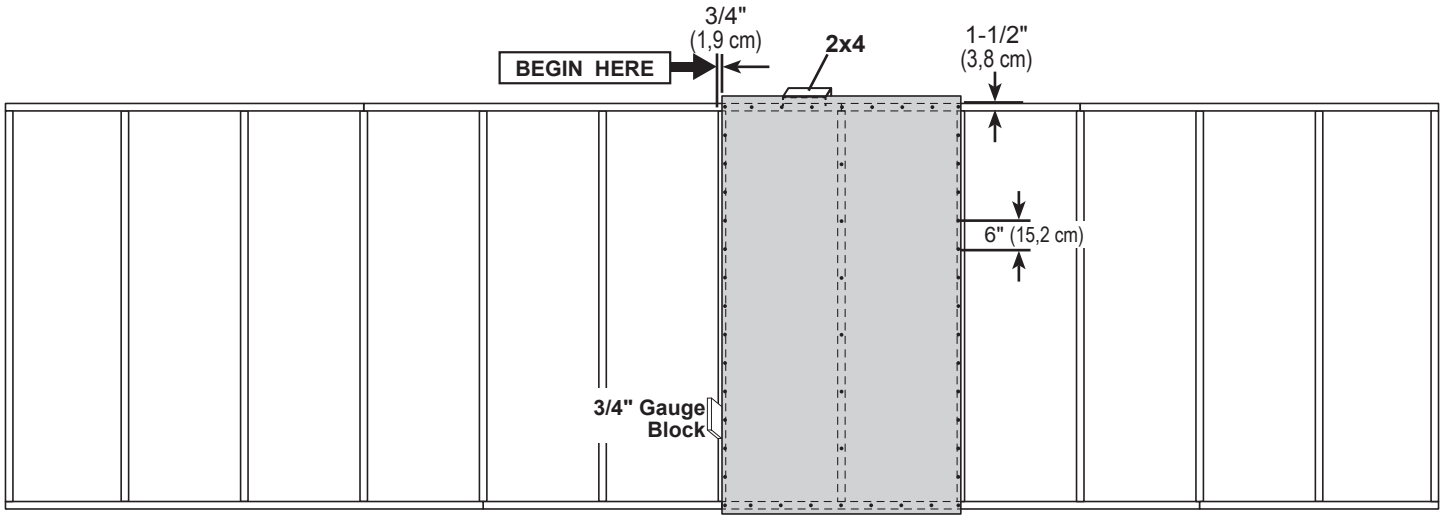

3 Install (5) **48" x 84"** panels, as shown, flush to installed panels and 1-1/2" from the top plate. Secure panels with 2" nails spaced 6" apart on edges and 12" apart inside panel.

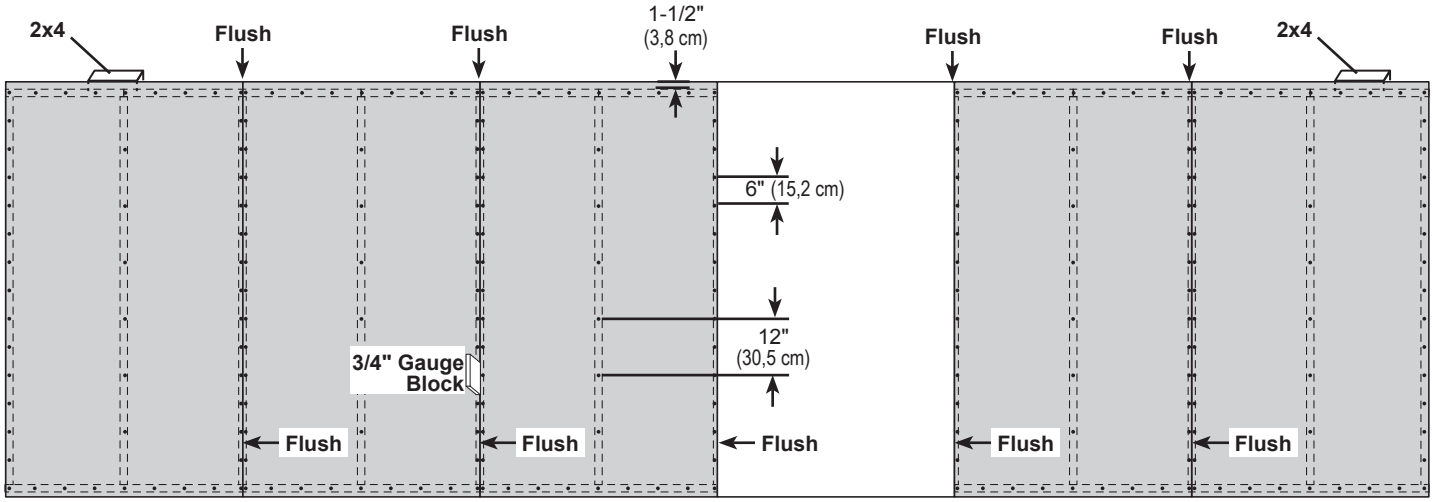

FINISH

Your 24' wall 04 is now assembled.

Carefully flip the wall over.

24' WALL 05

PARTS REQUIRED:

x52 3" (7,6 cm)

x3 **SP**
2 x 4 x 48" (5,1 x 10,2 x 121,9 cm)

x2 **TM**
2 x 4 x 72" (5,1 x 10,2 x 182,8 cm)

x10 **AI**
2 x 4 x 78-1/2" (5,1 x 10,2 x 199,4 cm)

x3 **TP**
2 x 4 x 96" (5,1 x 10,2 x 243,8 cm)

✓**BEGIN**

1 Arrange parts on edge on floor, as shown. Measure and mark from end of boards. Secure parts with (2) 3" nails at each connection and (4) 3" nails at seam.

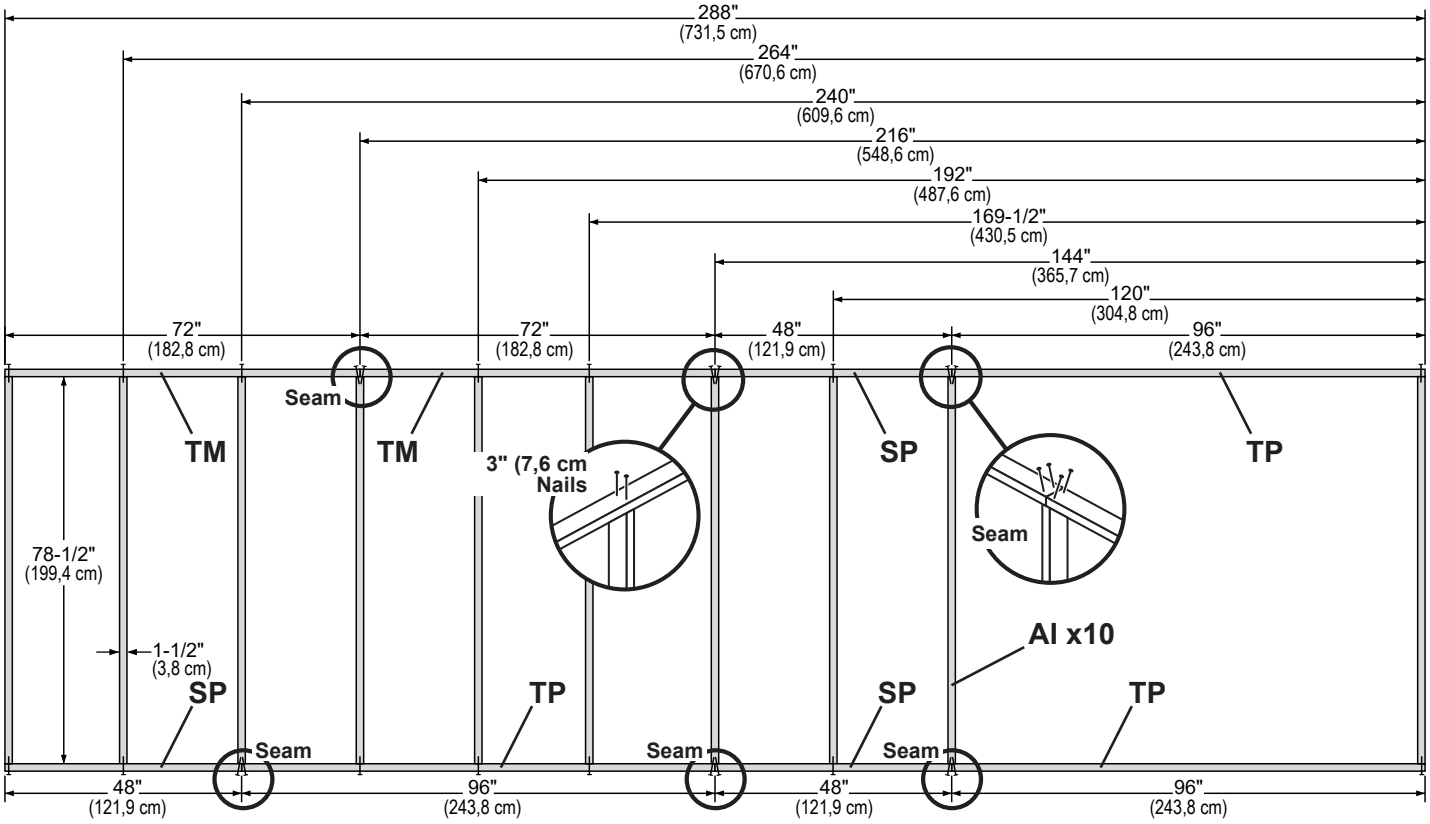

24' WALL 05

PARTS REQUIRED:

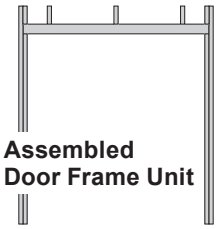

Assembled Door Frame Unit

x22

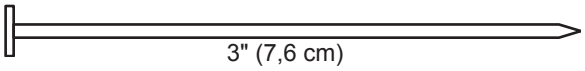

3" (7,6 cm)

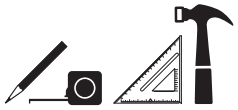

2 Arrange parts on edge on floor, as shown. Measure and mark from end of boards. Place the **Door Frame Unit** at measurements shown. Secure parts with (2) 3" nails at each connection.

HINT:
For easier nailing stand on frame.

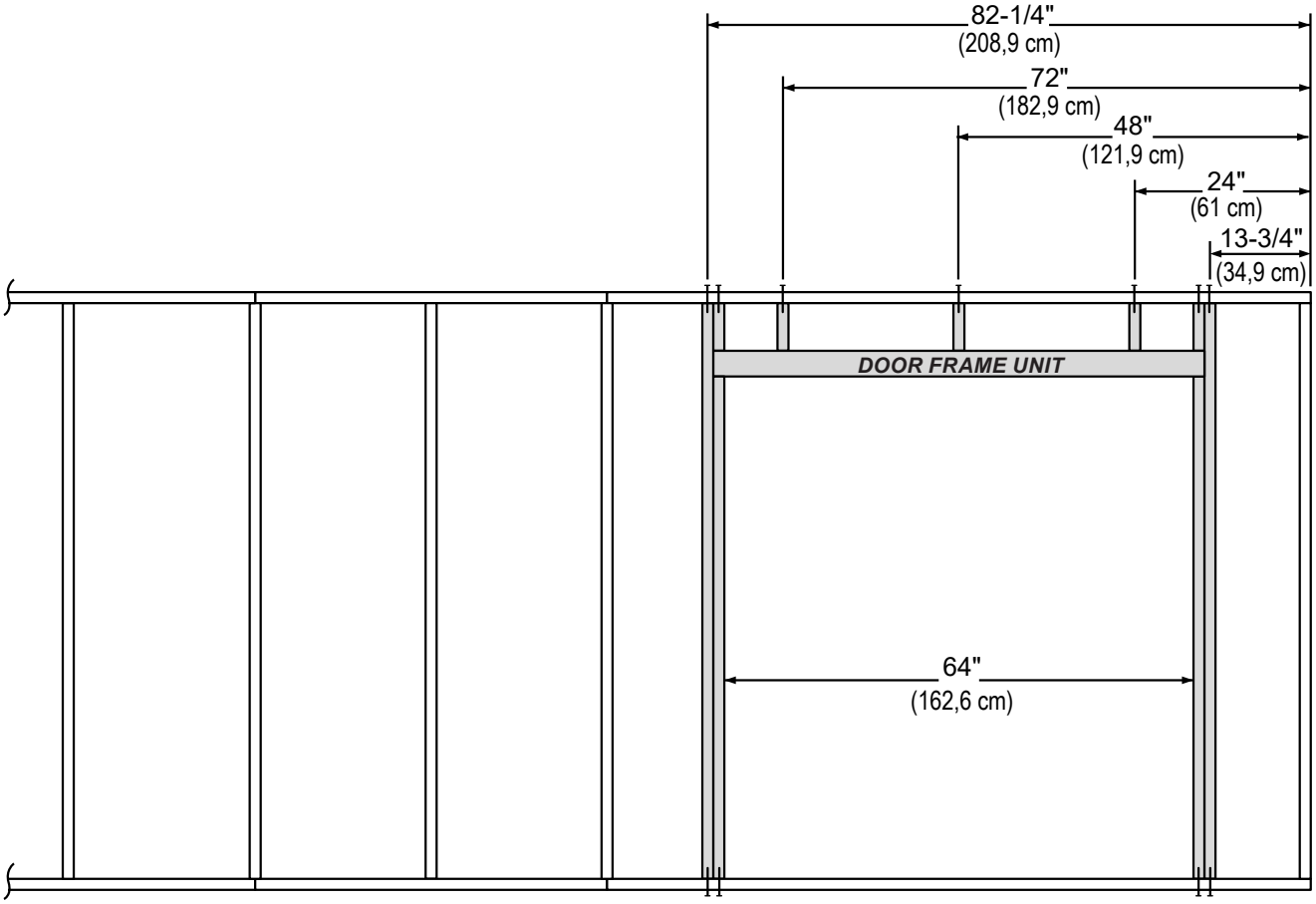

24' WALL 05

PARTS REQUIRED:

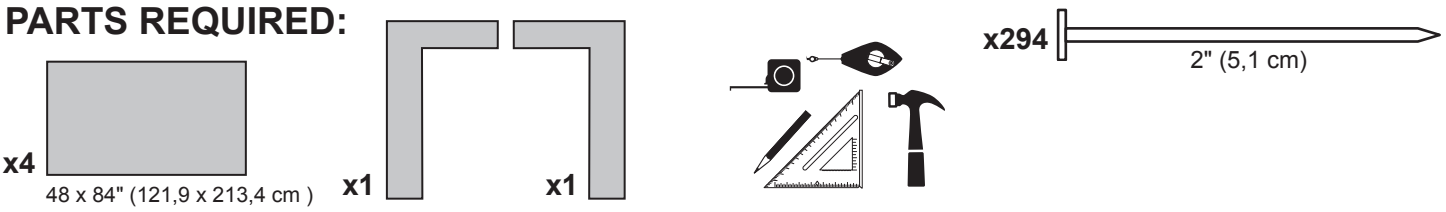

3 Install the left door panel 1-1/2" from the top plate. Use a 2x4 spacer for consistent measurement. Secure panel with 2" nails spaced 6" apart on edges.

4 Install the right door panel flush to the installed panel. Secure panel with 2" nails spaced 6" apart on edges.

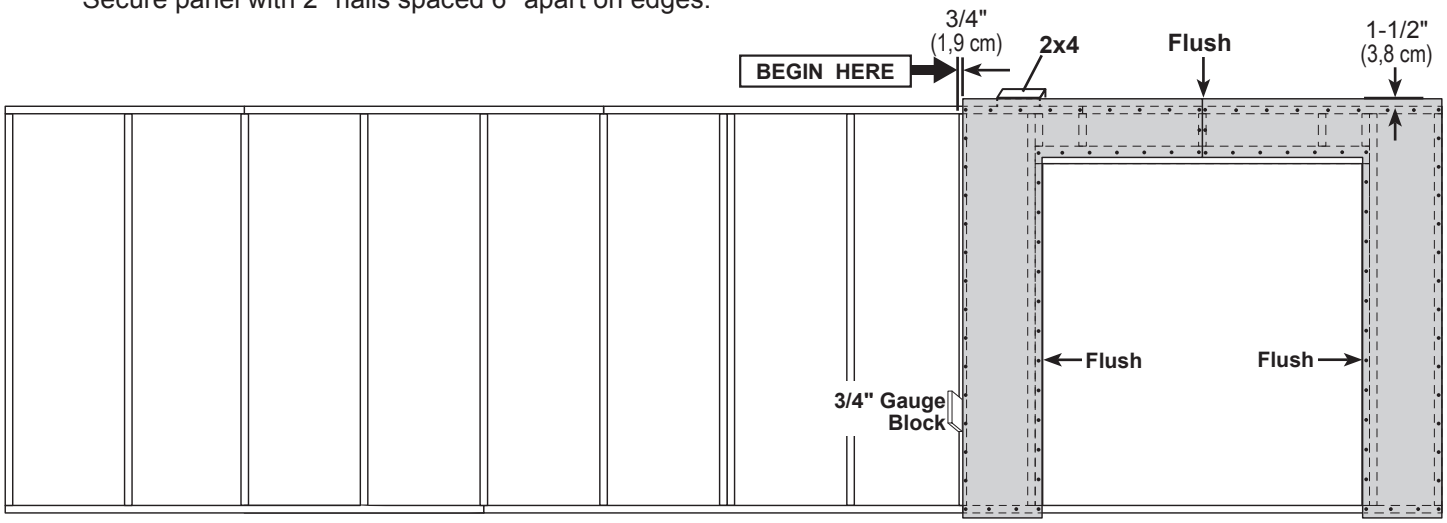

5 Install (4) **48" x 84"** panels, as shown, flush to installed panels and 1-1/2" from the top plate. Secure panels with 2" nails spaced 6" apart on edges and 12" apart inside panel.

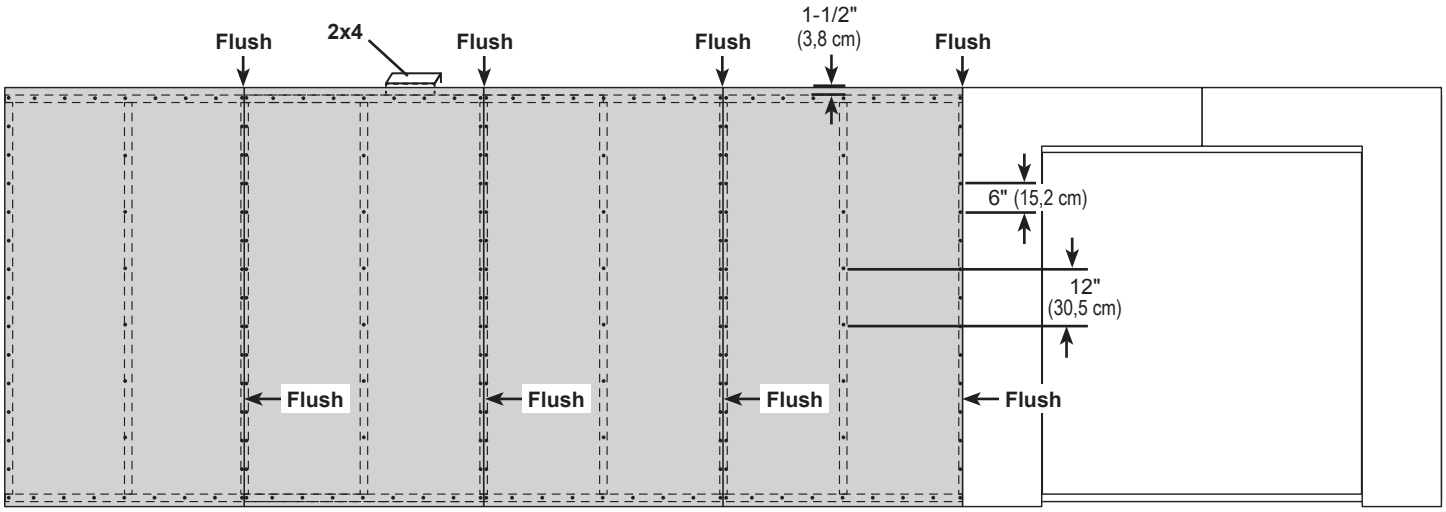

FINISH

Your 24' wall 05 is now assembled. Carefully flip the wall over.

24' WALL 06

PARTS REQUIRED:

x52 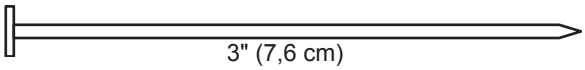

x3 **SP**
2 x 4 x 48" (5,1 x 10,2 x 121,9 cm)

x2 **TM**
2 x 4 x 72" (5,1 x 10,2 x 182,8 cm)

x10 **AI**
2 x 4 x 78-1/2" (5,1 x 10,2 x 199,4 cm)

x3 **TP**
2 x 4 x 96" (5,1 x 10,2 x 243,8 cm)

✓**BEGIN**

1 Arrange parts on edge on floor, as shown. Measure and mark from end of boards. Secure parts with (2) 3" nails at each connection and (4) 3" nails at seam.

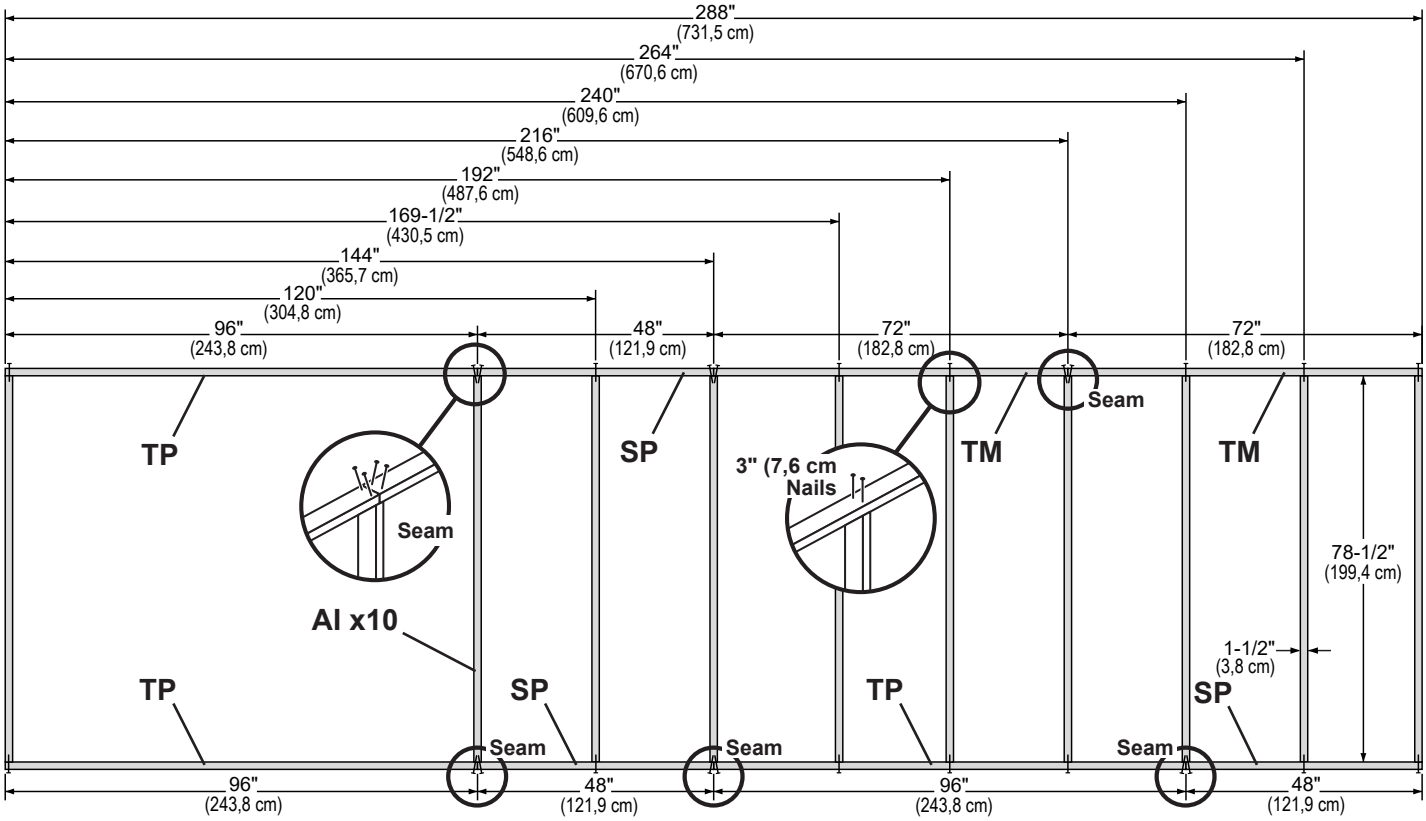

24' WALL 06

PARTS REQUIRED:

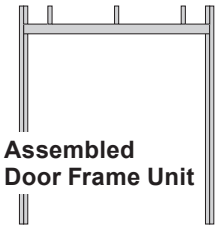

Assembled Door Frame Unit

x22

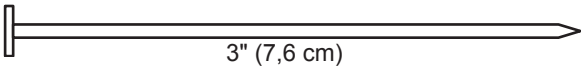

3" (7,6 cm)

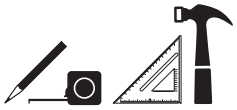

2 Arrange parts on edge on floor, as shown. Measure and mark from end of boards. Place the **Door Frame Unit** at measurements shown. Secure parts with (2) 3" nails at each connection.

HINT: For easier nailing stand on frame.

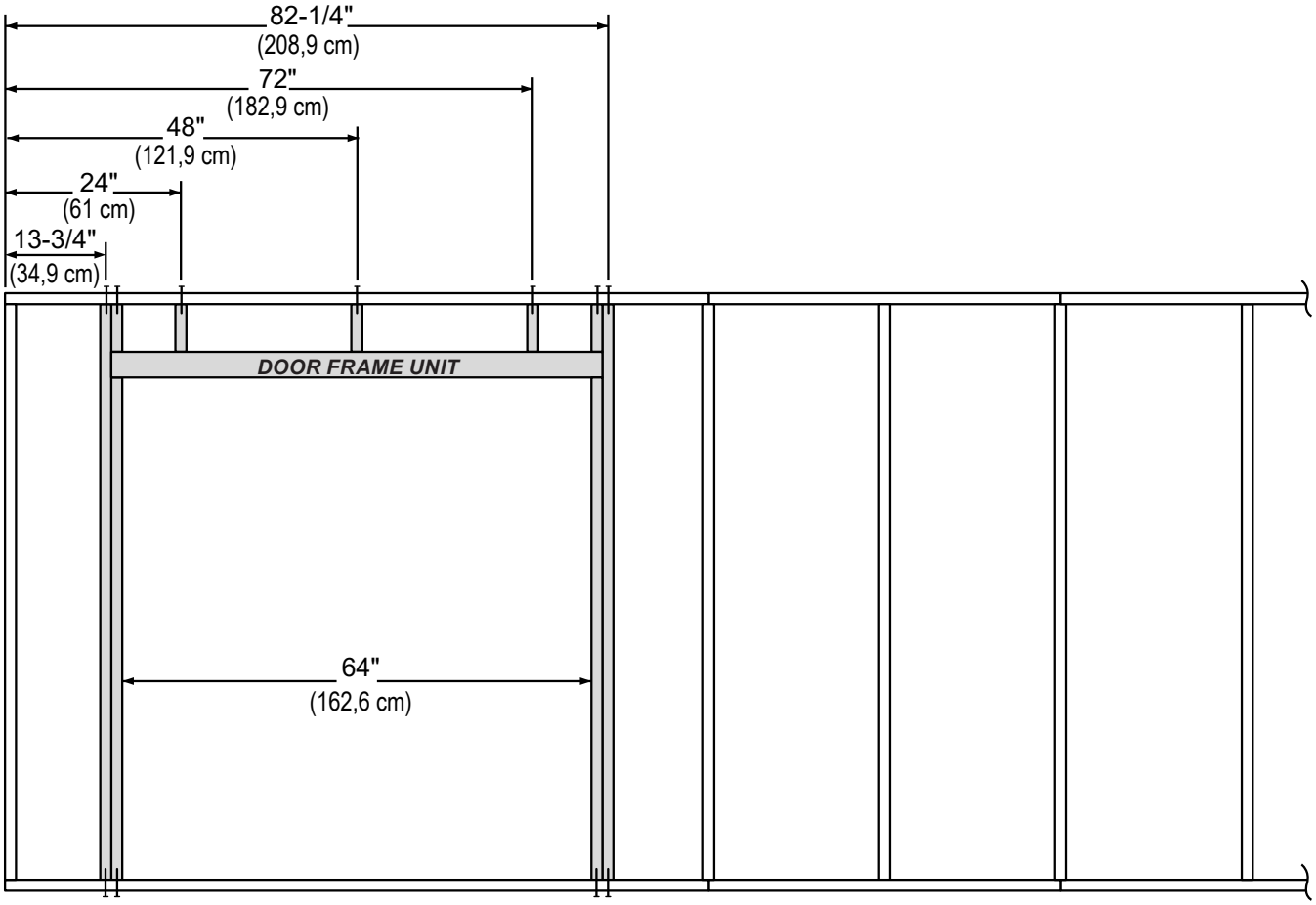

24' WALL 06

PARTS REQUIRED:

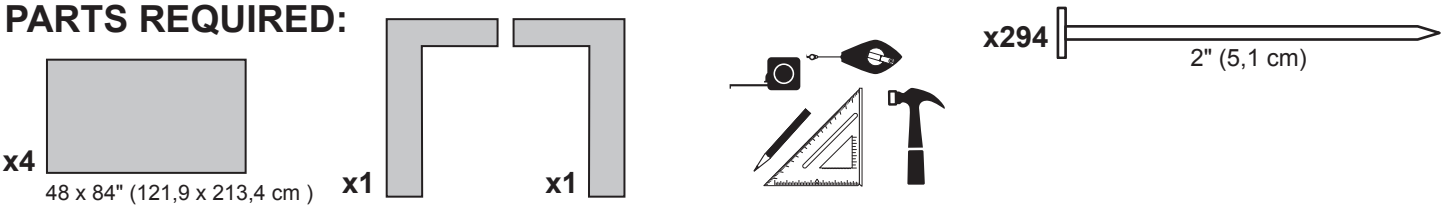

3 Install the left door panel 1-1/2" from the top plate. Use a 2x4 spacer for consistent measurement. Secure panel with 2" nails spaced 6" apart on edges.

4 Install the right door panel flush to the installed panel. Secure panel with 2" nails spaced 6" apart on edges.

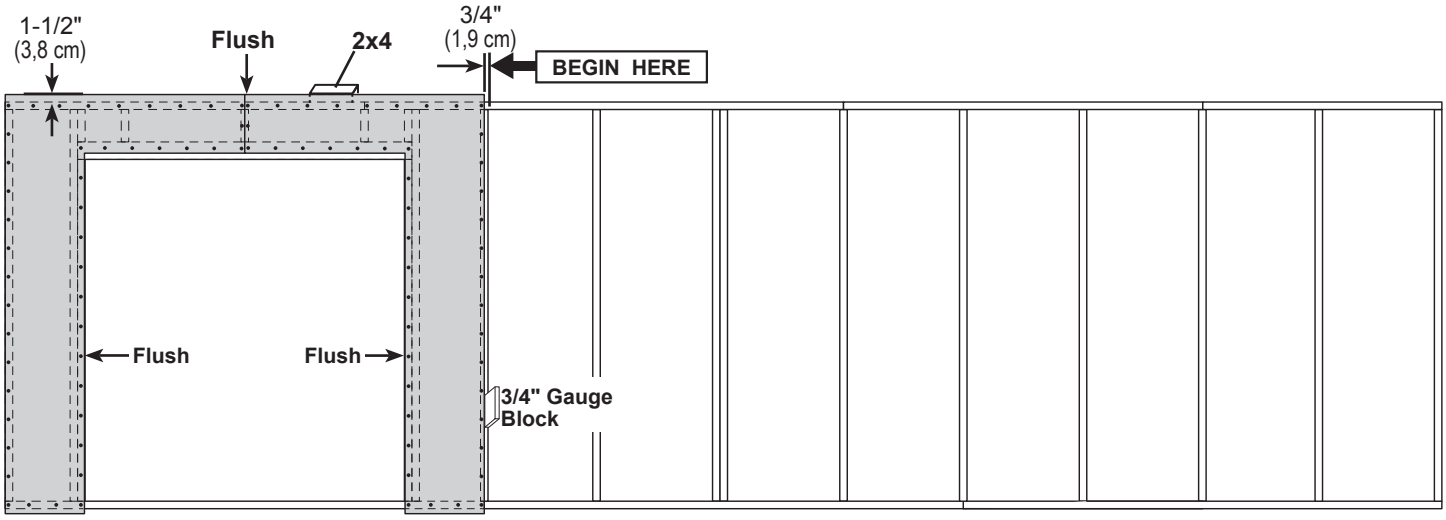

5 Install (4) **48" x 84"** panels, as shown, flush to installed panels and 1-1/2" from the top plate. Secure panels with 2" nails spaced 6" apart on edges and 12" apart inside panel.

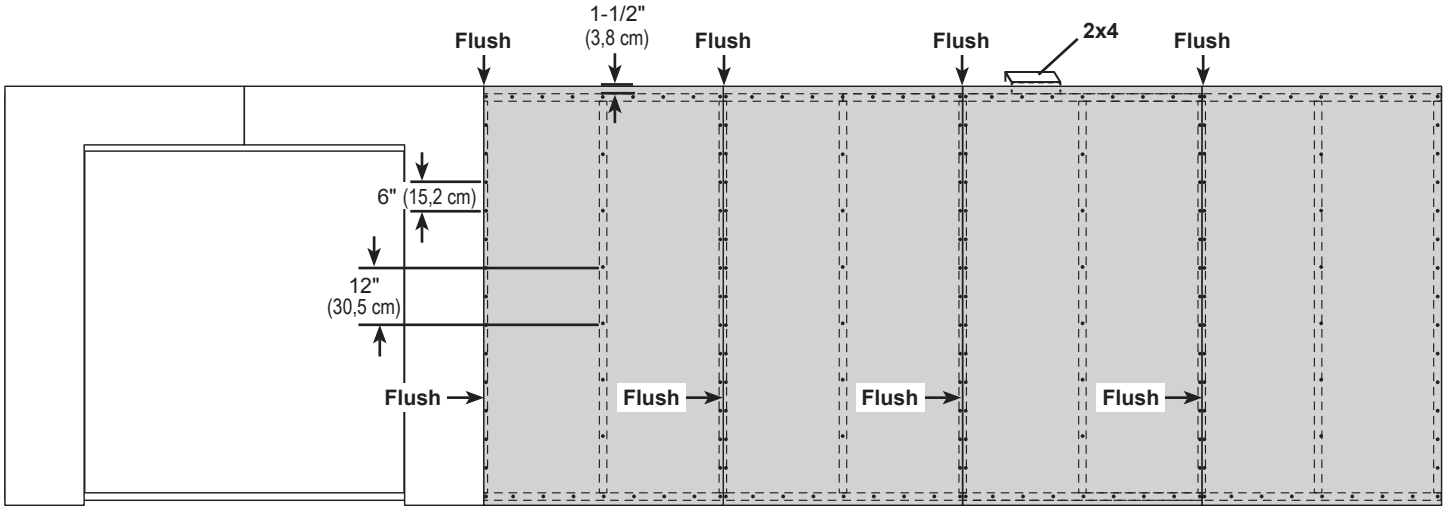

Your 24' wall 06 is now assembled. Carefully flip the wall over.

24' WALL 07

PARTS REQUIRED:

x50 3" (7,6 cm)

x3 **SP**
2 x 4 x 48" (5,1 x 10,2 x 121,9 cm)

x2 **TM**
2 x 4 x 72" (5,1 x 10,2 x 182,9 cm)

x10 **AI**
2 x 4 x 78-1/2" (5,1 x 10,2 x 199,4 cm)

x3 **TP**
2 x 4 x 96" (5,1 x 10,2 x 243,8 cm)

✓**BEGIN**

1 Arrange parts on edge on floor, as shown. Measure and mark from end of boards. Secure parts with (2) 3" nails at each connection and (4) 3" nails at seam.

HINT: For easier nailing stand on frame.

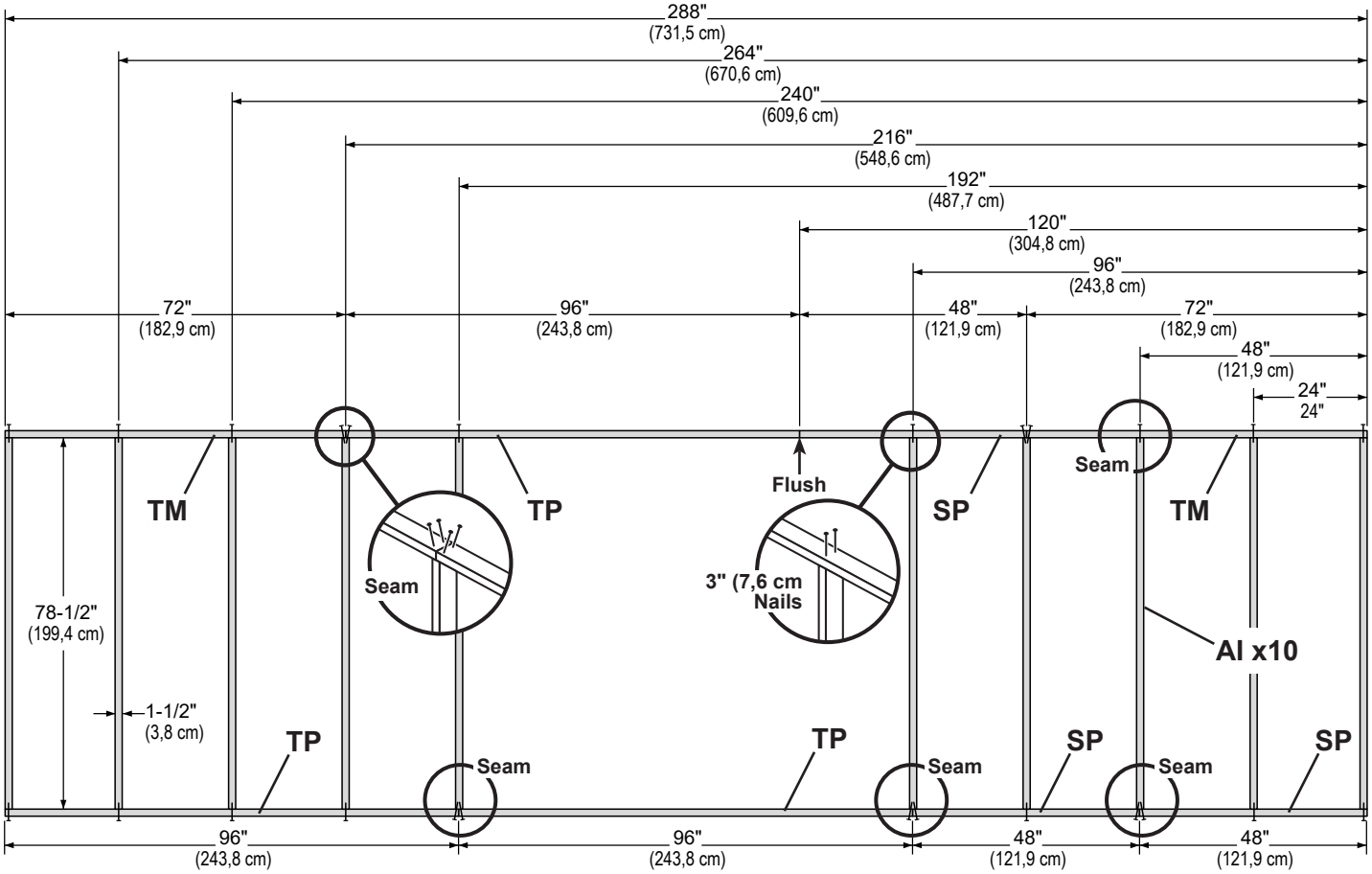

24' WALL 07

PARTS REQUIRED:

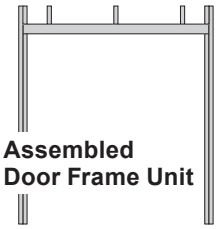

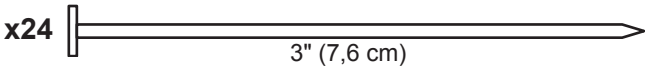

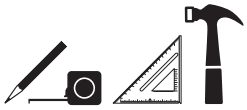

2 Place the **Door Frame Unit** at measurements shown. Measure and mark from end of frame. Ensure 64" (162,8 cm) door measurement.

Secure door frame unit with (2) 3" nails at each connection.

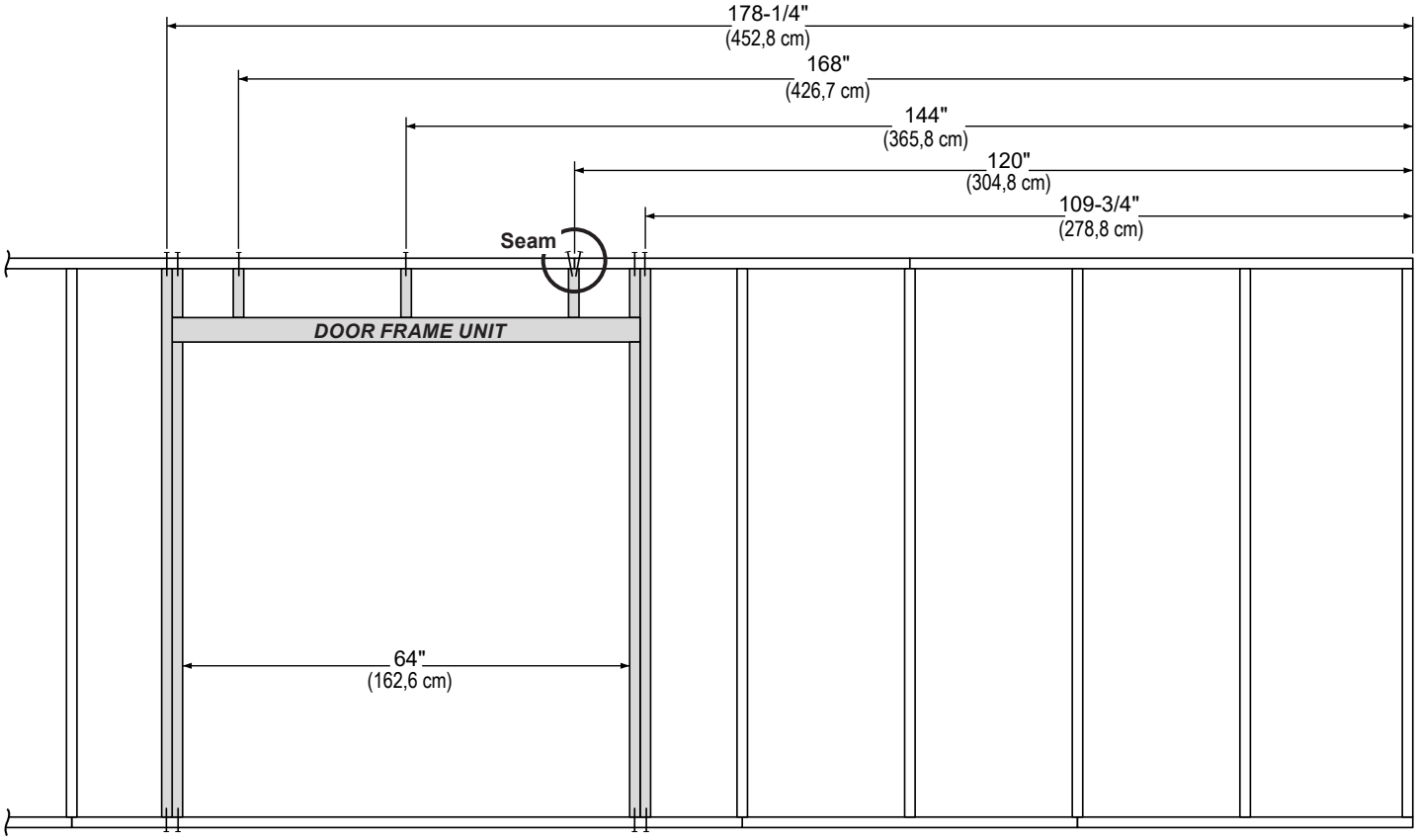

24' WALL 07

PARTS REQUIRED:

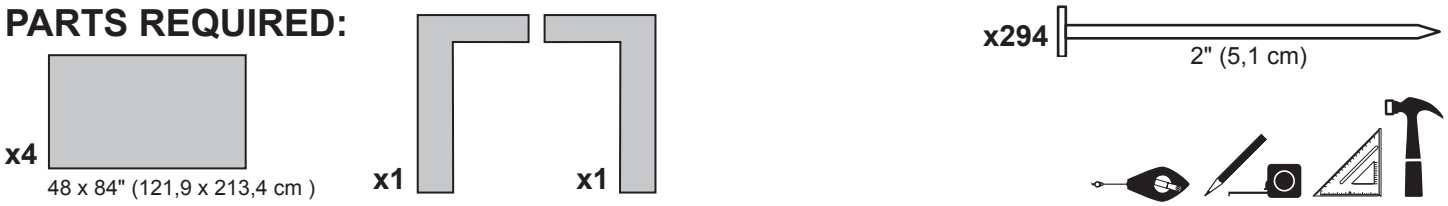

3 Install the left panel 1-1/2" from the top plate. Use a 2x4 spacer for consistent measurement. Secure panel with 2" nails spaced 6" apart on edges.

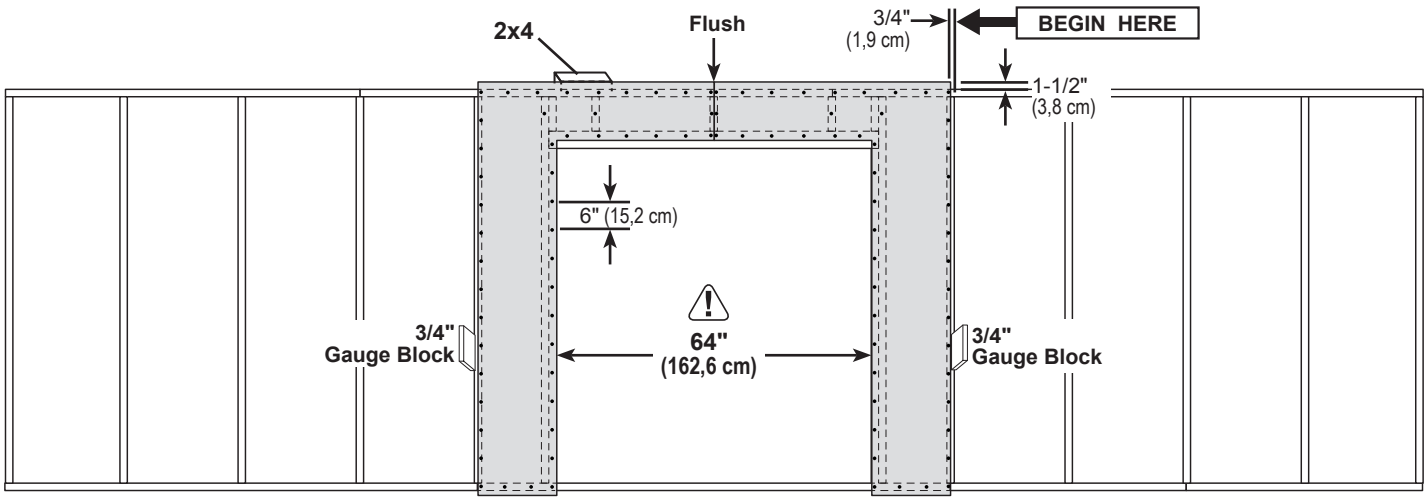

4 Install the right door panel flush to installed panel, as shown. Ensure 64" (162,8 cm) door measurement. Secure panel with 2" nails spaced 6" apart on edges.

5 Install (4) **48" x 84"** panels flush to installed panels and 1-1/2" from the top plate. Secure panels with 2" nails spaced 6" apart on edges.

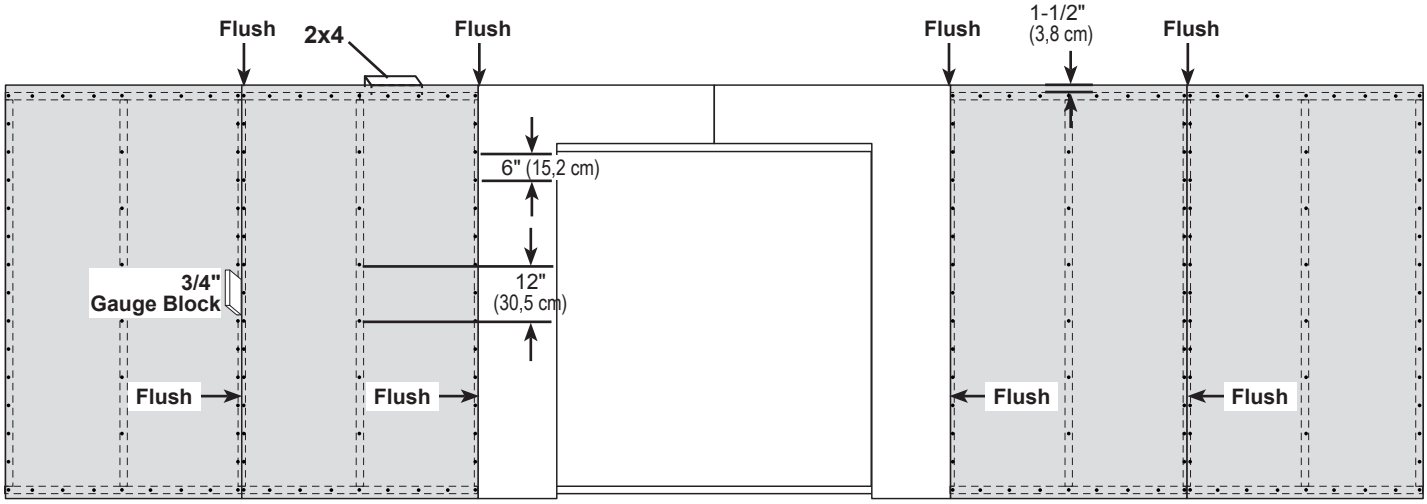

FINISH

Your 24' wall 07 is now assembled. Carefully flip the wall over.

24' WALL 04, 05, 06 or 07 INSTALLATION

PARTS REQUIRED

x2 **TJ**
2 x 4 x 92-1/2" (5,1 x 10,2 x 235 cm)

x24 — 3" (7,6 cm)

x4 — 3" (7,6 cm)

x54 — 2" (5,1 cm)

BEGIN

1

Center 24' wall on the 288" floor dimension.
1-1/2" overlap is to the top.
Use (2) **TJ** as a temporary brace.
Secure each with (2) 3" screws.

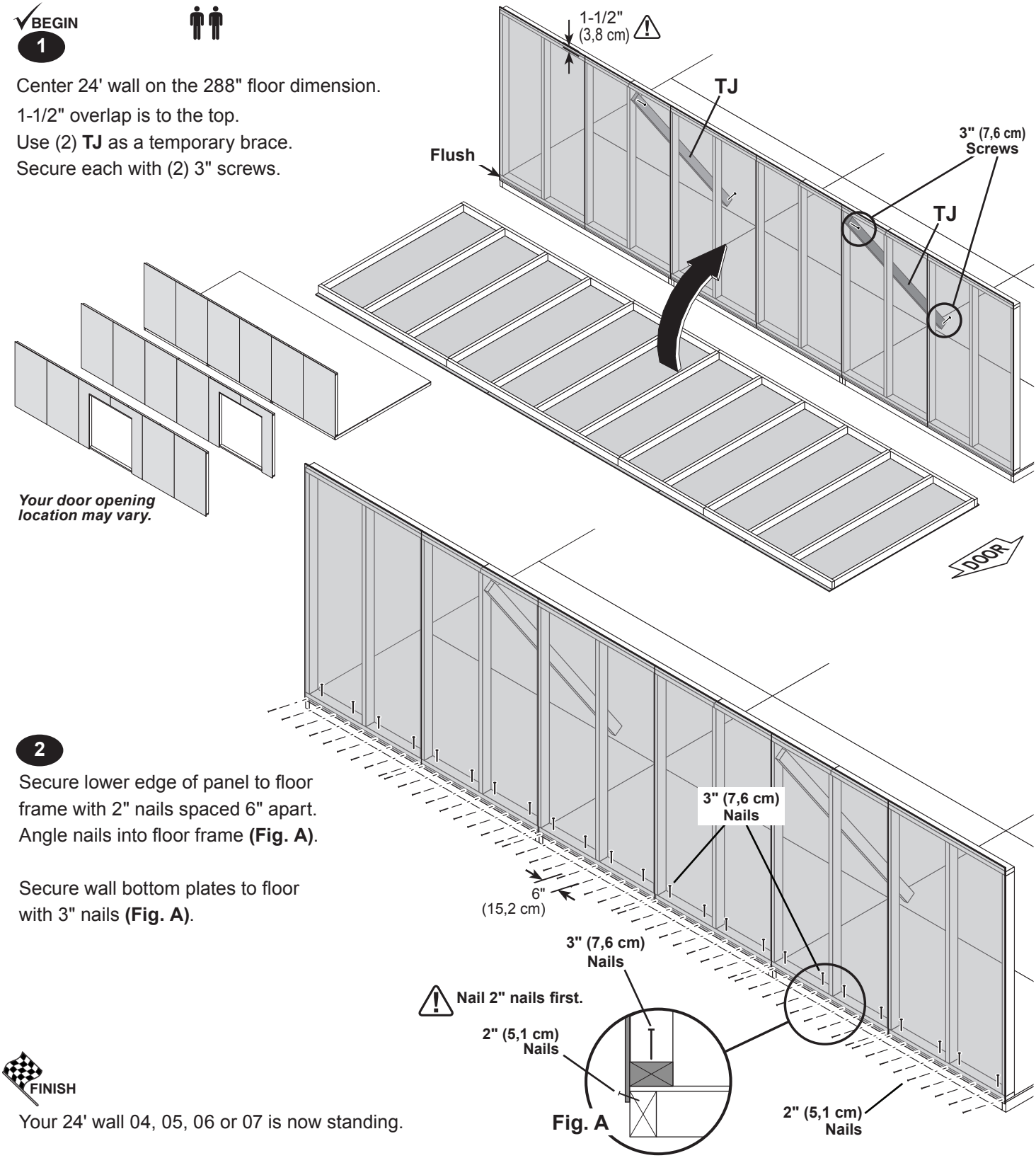

2

Secure lower edge of panel to floor frame with 2" nails spaced 6" apart. Angle nails into floor frame **(Fig. A)**.

Secure wall bottom plates to floor with 3" nails **(Fig. A)**.

Fig. A

FINISH

Your 24' wall 04, 05, 06 or 07 is now standing.

12' WALL 02 INSTALLATION

PARTS REQUIRED:

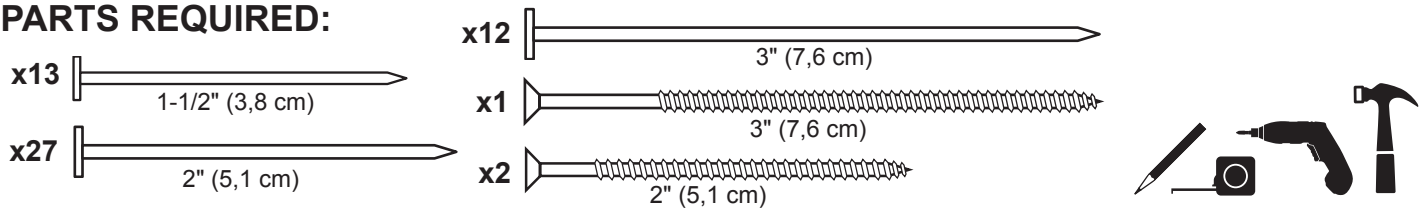

✓BEGIN

1

Place 12' wall centered on floor.
1-1/2" overlap is to the top.

Secure wall with (1) 2" screw into 24' wall bottom plate **(Fig. A)** and top plate **(Fig. B)**.

Secure wall to bottom plate first.

⚠ **ENSURE PANEL CORNERS ARE FLUSH.**

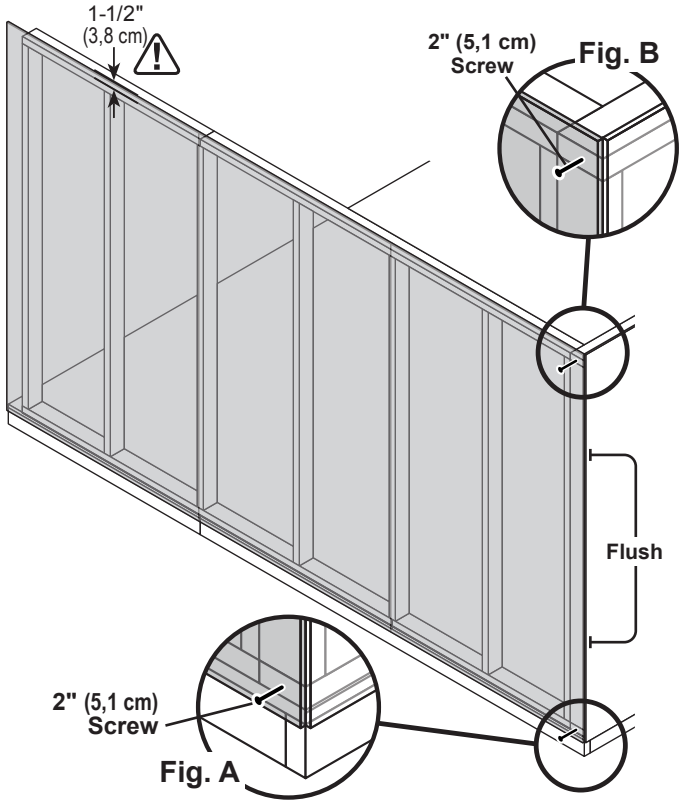

2

Secure lower edge of panels to floor with 2" nails spaced 6" apart.
Angle nails into floor frame **(Fig. C)**.

Secure panel to 24' wall stud with 1-1/2" nails spaced 6" apart.

3

Secure wall top plate with (1) 3" screw angled at the corner at an angle **(Fig. D)**.

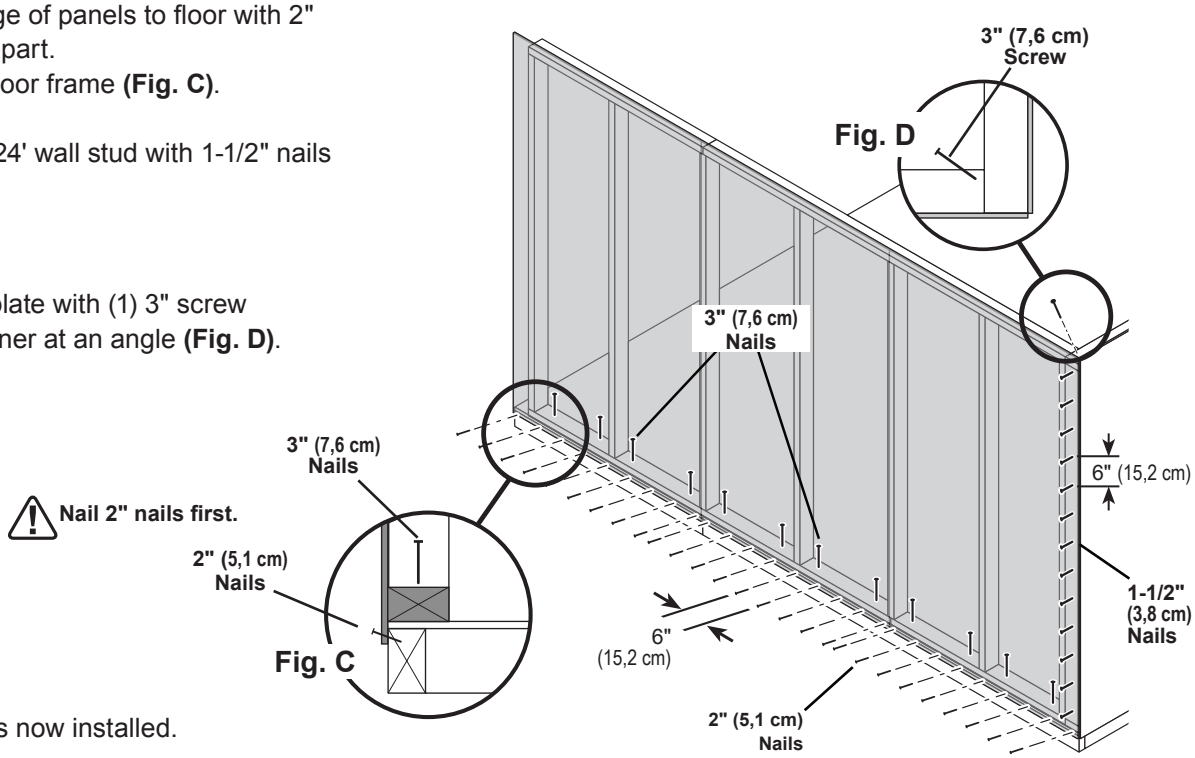

FINISH

Your 12' wall 02 is now installed.

(2nd) 24' WALL 04 INSTALLATION

PARTS REQUIRED:

- x2 — 2" (5,1 cm)
- x24 — 3" (7,6 cm)
- x54 — 2" (5,1 cm)
- x3 — 3" (7,6 cm)
- x13 — 1-1/2" (3,8 cm)
- x1 — TJ *Temporary Brace* 2 x 4 x 92-1/2" (5,1 x 10,2 x 234,9 cm)

✓BEGIN

1

Install 24' wall centered on floor.
1-1/2" overlap is to the top.
Use **TJ** as a brace.
Secure with (2) 3" Screws.

2

Secure wall with (1) 2" screw through gable wall panel into 24' wall bottom and top plates **(Fig. B, Fig. A)**.
Secure wall to bottom plate first.

⚠ **ENSURE PANEL CORNERS ARE FLUSH.**

3

Secure lower edge of wall panels to floor frame with 2" nails spaced 6" apart.
Angle nails into floor frame **(Fig. C)**.
Secure wall bottom plates to floor with 3" nails **(Fig. C)**.

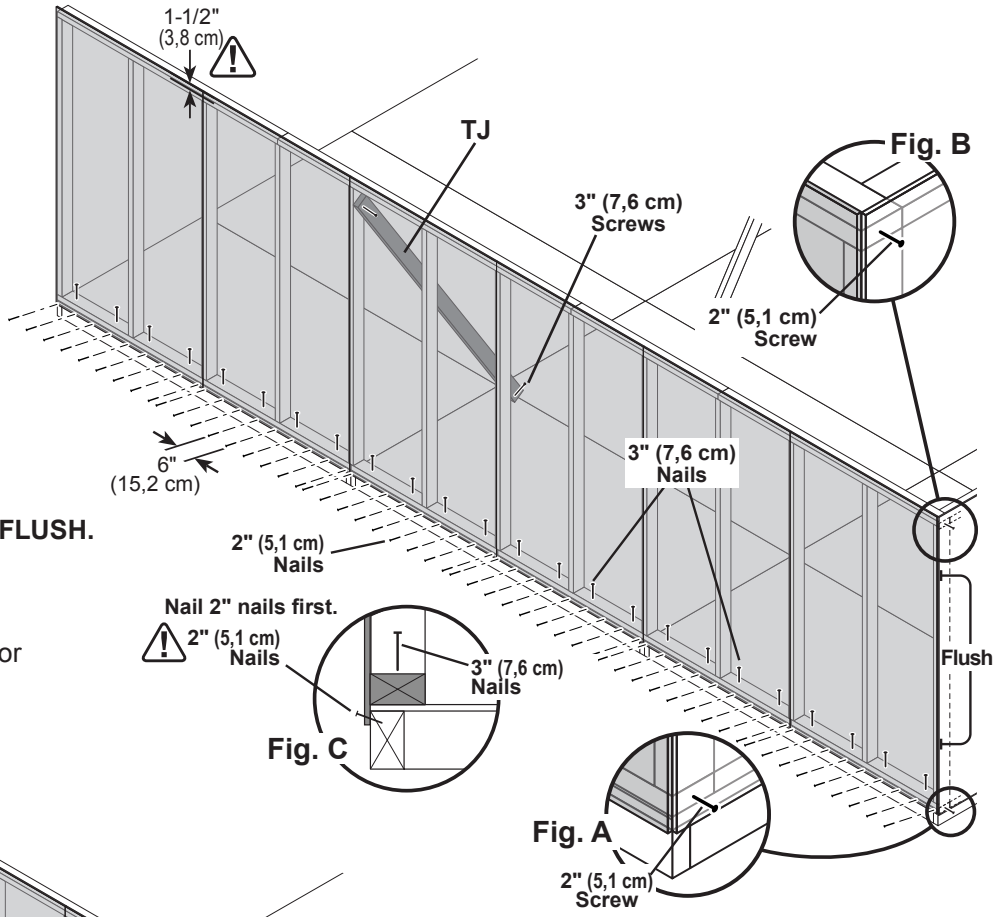

4

Secure 12' wall panel to 24' wall stud with 1-1/2" nails spaced 6" apart.

5

Secure gable wall top plate with (1) 3" screw at the corner at an angle **(Fig. D)**.

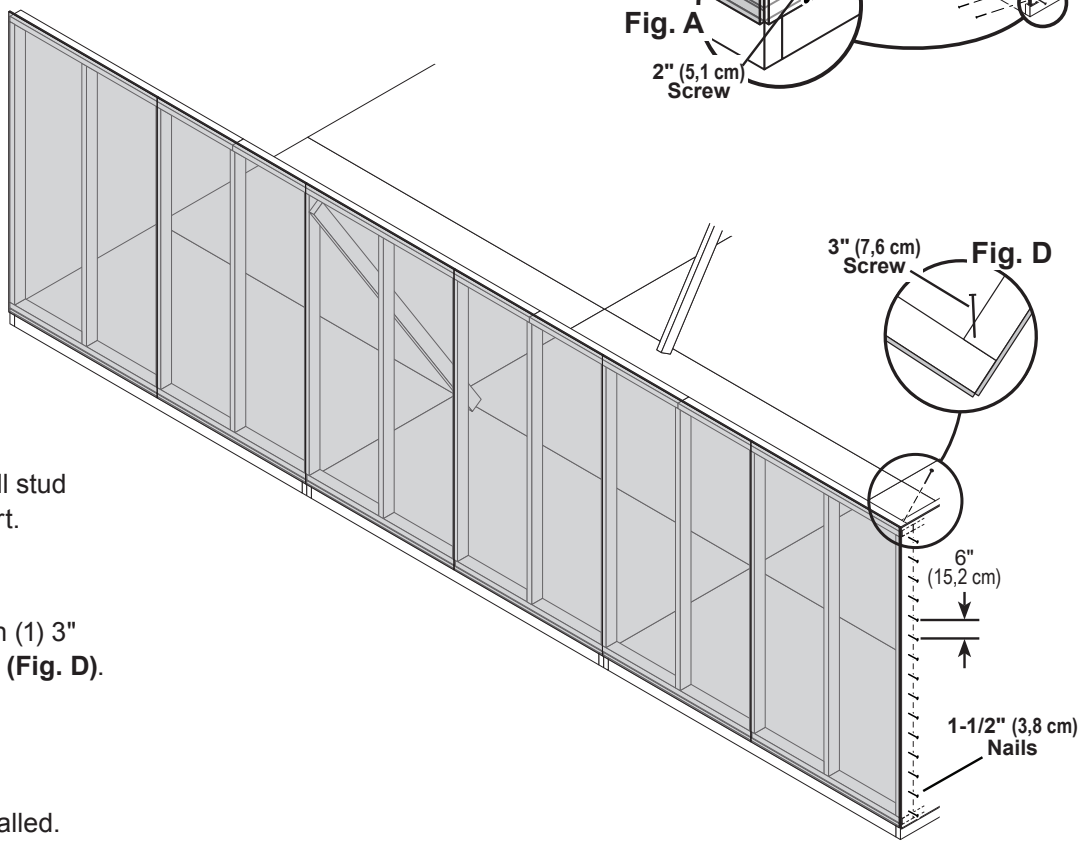

FINISH

Your 2nd 24' wall 04 is now installed.

12' WALL 01 or 03 INSTALLATION

PARTS REQUIRED

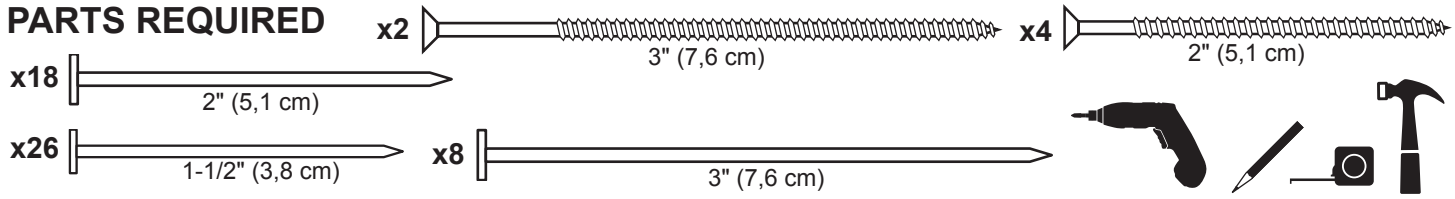

✓BEGIN

1

Install 12' wall on floor centered between 24' walls.

Secure wall with 2" screws into top and bottom plates **(Fig. A, Fig. B)**.

Secure wall to bottom plate first.

⚠ **ENSURE PANEL CORNERS ARE FLUSH.**

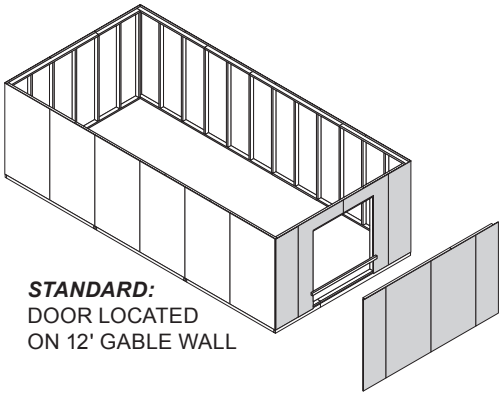

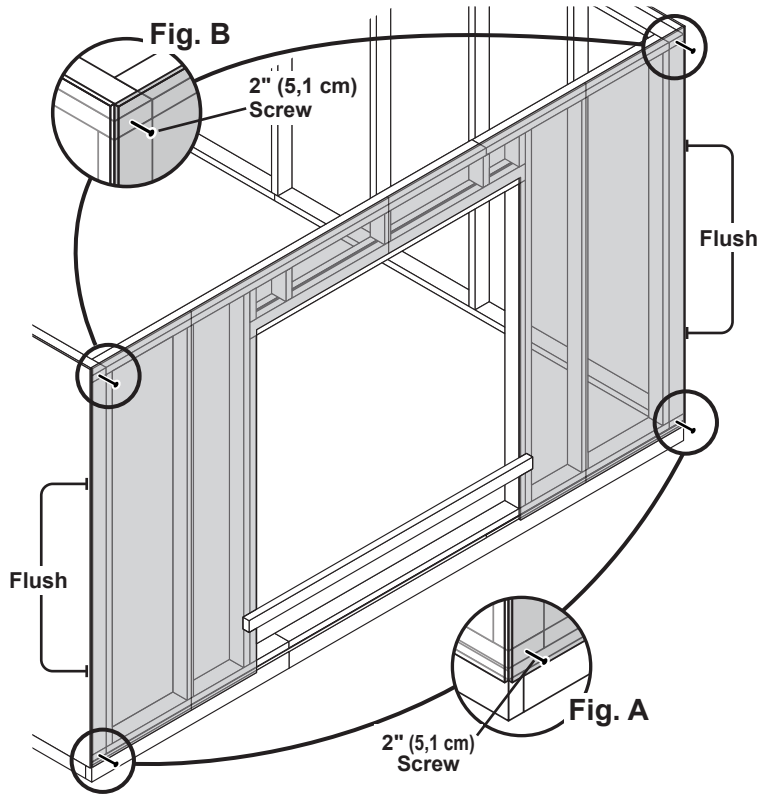

2

Secure lower edge of panels to floor with 2" nails spaced 6" apart.
Angle nails into floor frame **(Fig. C)**.

Nail panels to 24' wall studs with 1-1/2" nails spaced 6" apart.

3

Secure wall top plates with 3" screws at each corner at an angle **(Fig. D)**.

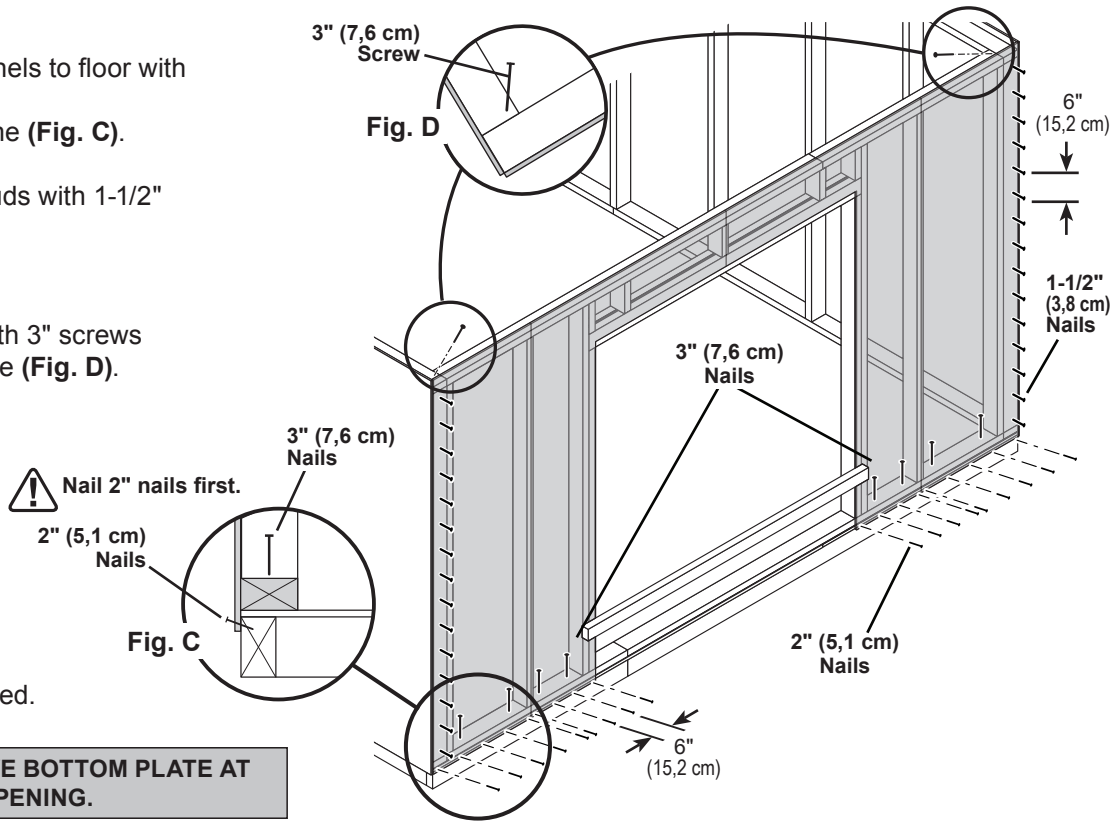

FINISH

Your walls are now installed.

CUT OUT AND REMOVE BOTTOM PLATE AT DOOR OPENING.

WALL DOUBLERS INSTALLATION

PARTS REQUIRED:

x4 SP
2 x 4 x 48" (5,1 x 10,2 x 121,9 cm)

x2 STL
2 x 4 x 44-1/2" (5,1 x 10,2 x 113 cm)

x88
3" (7,6 cm)

x2 TJ
2 x 4 x 92-1/2" (5,1 x 10,2 x 234,9 cm)

x4 TP
2 x 4 x 96" (5,1 x 10,2 x 243,8 cm)

✓BEGIN

1 Orient parts on top of wall frames. Measure and mark from end of boards. Secure from top with (2) 3" nails spaced every 24" **(Fig. A).**

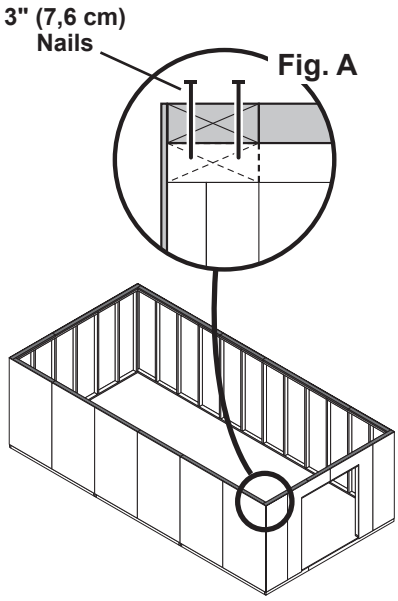

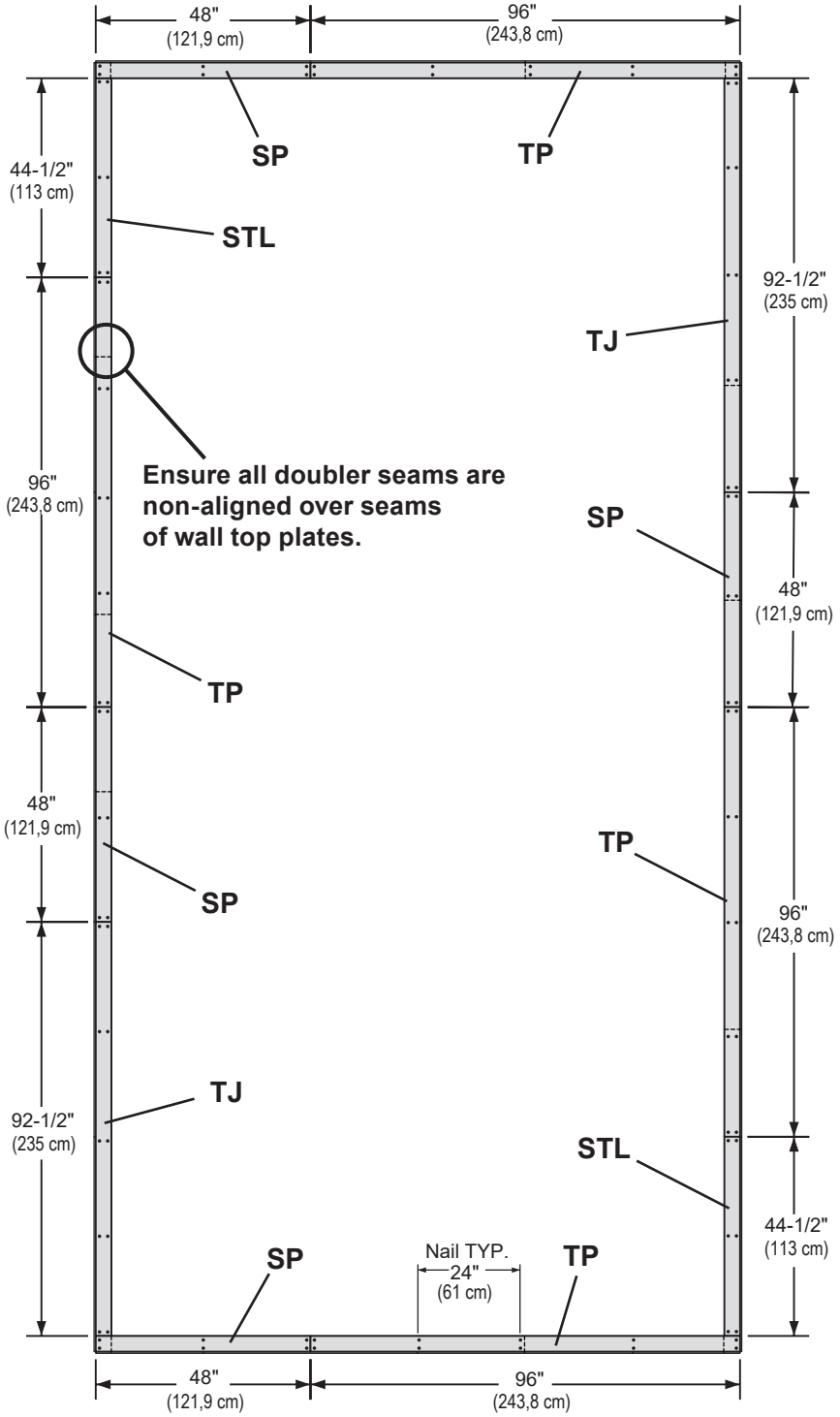

FINISH

Your wall doublers are now installed.

RAFTER INSTALLATION

PARTS REQUIRED:

x52 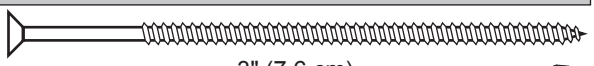

3" (7,6 cm)

x2 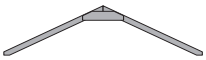 One-Gusset Aassembled

x11 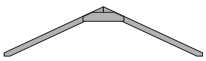 Two-Gusset Assembled

✓BEGIN

1 Align rafters over the wall studs.

Check that you have the measurements shown.

Secure rafters with (2) 3" screws angled at each end **(Fig. A, Fig. B)**.

Secure rafters on opposite side.

⚠ ***Maintain the measurements between rafters.***

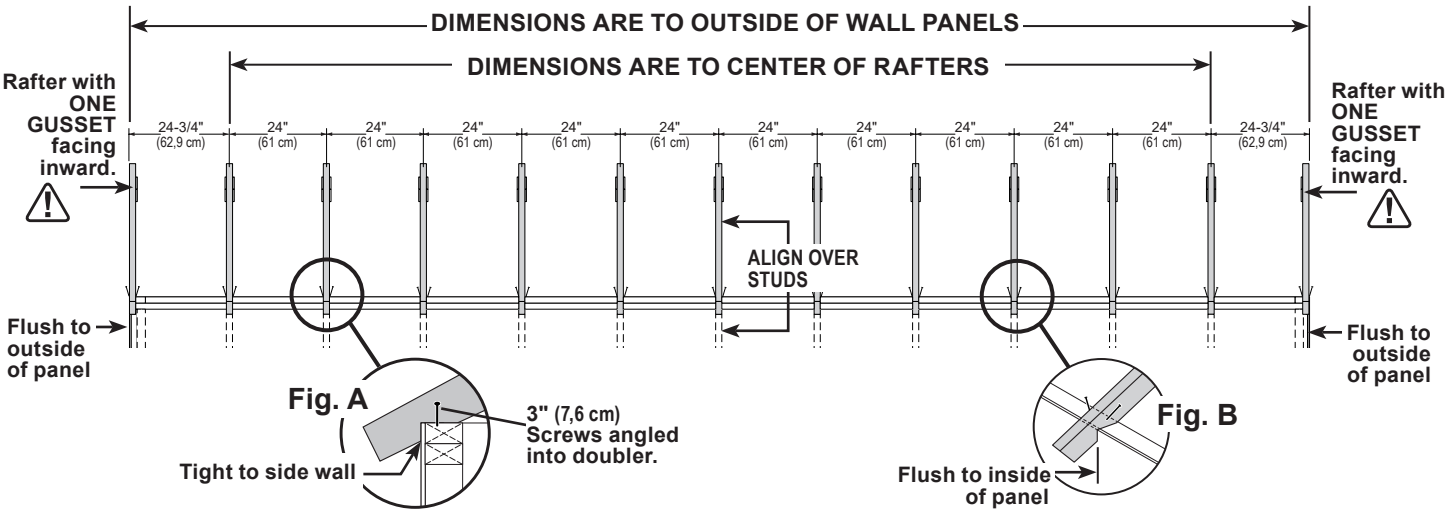

FINISH

Your rafters are now installed.

GABLE UNITS

PARTS REQUIRED:

x40 1-1/2" (3,8 cm)

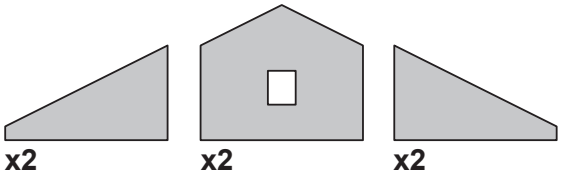

x4 UV
2 x 4 x 23-1/4" (5,1 x 10,2 x 59,1 cm)

Install gable panels with the primed side facing up.

BEGIN

1 Install middle panel on (2) **UV**. Arrange parts to measurements shown.
Secure panel with 1-1/2" nails spaced 6" apart along edge.
Check measurements as you build the gable unit.

2 Place left and right panels on **UV**, flush to middle panel.
Secure panel with 1-1/2" nails spaced 6" apart along edge.

Mark the center of the middle gable panel.

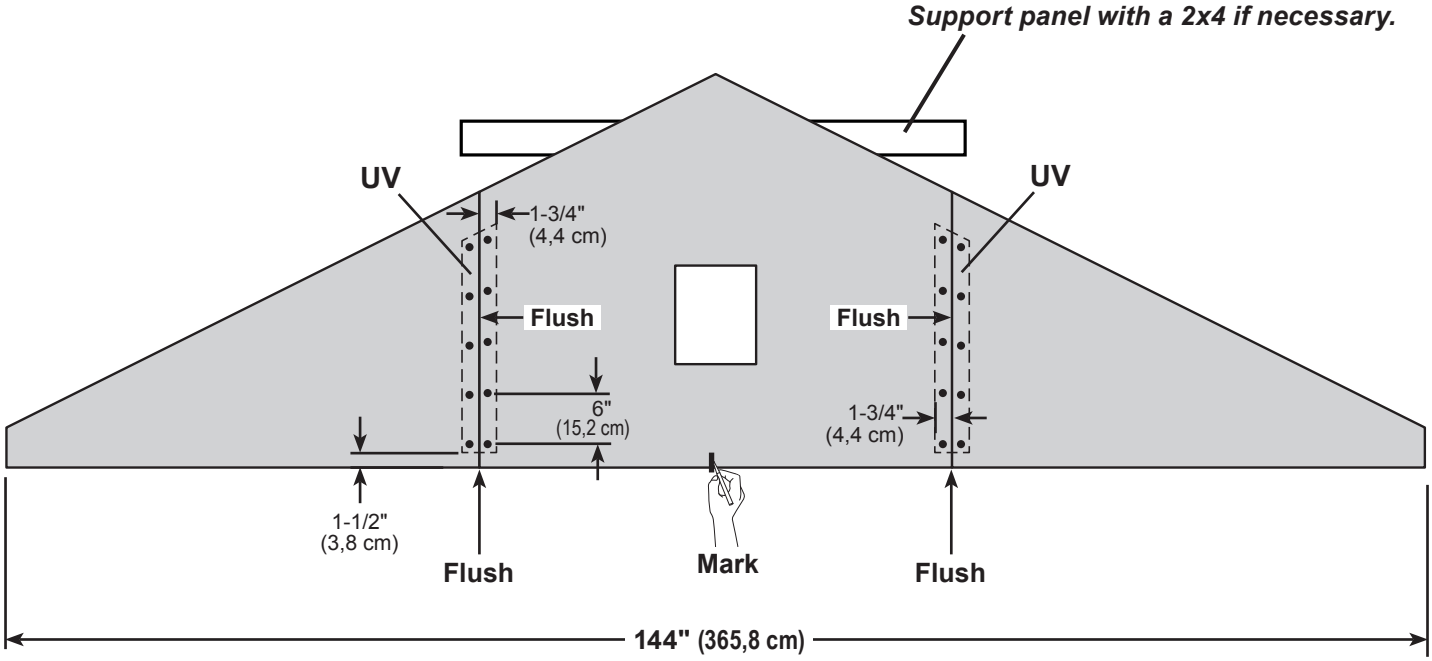

Repeat steps to assemble the 2nd gable unit.

FINISH

Your (2) gable units are now assembled.

GABLE UNIT LADDER FRAMES

PARTS REQUIRED:

x12 **CLA**
2 x 4 x 4-7/8" (5,1 x 10,2 x 12,4 cm)

x8 **KFB**
2 x 4 x 88-11/16" (5,1 x 10,2 x 225,3 cm)

x56

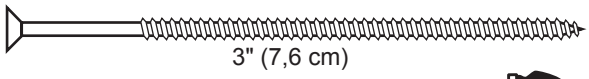

3" (7,6 cm)

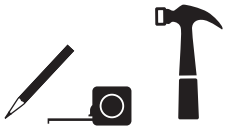

✓**BEGIN**

1 Arrange parts as shown **(Fig. A)**.
You will build (4) assemblies **(Fig. B)**.

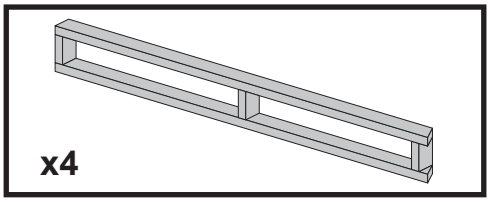

Fig. B

2 Arrange, measure and mark locations of (3) **CLA** as shown place **KFB** on top. Secure with 3" screws as shown **(Fig. A)**.
Ensure parts are flush along edges.

Fig. A

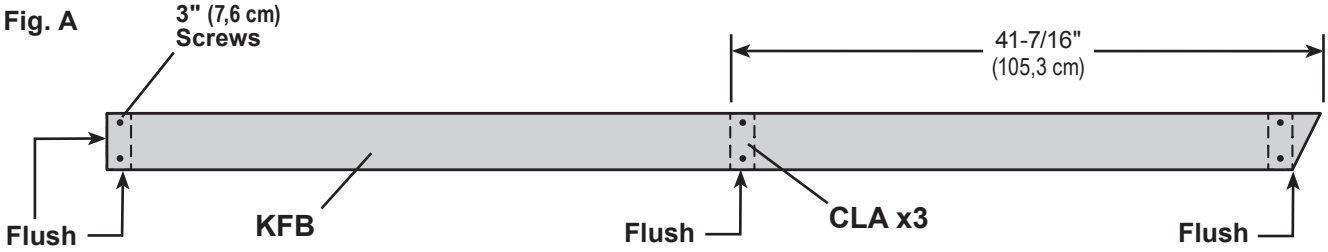

3 Flip over the gable ladder sub-assembly and secure **KFB** to the (3) **CLA** with 3" screws **(Fig. C)**.

Fig. C

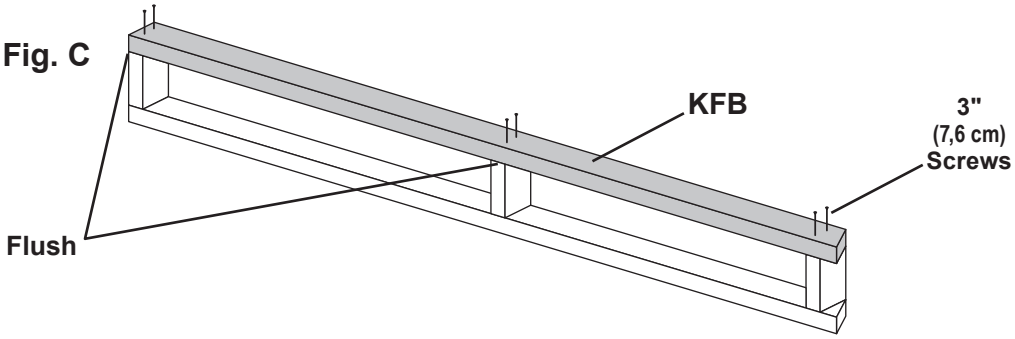

4 Repeat steps 2-3 to build (3) additional gable ladder sub-assemblies.

5 To complete gable ladder, secure two sub-assemblies together with (2) 3" screws, as shown **(Fig. D)**.

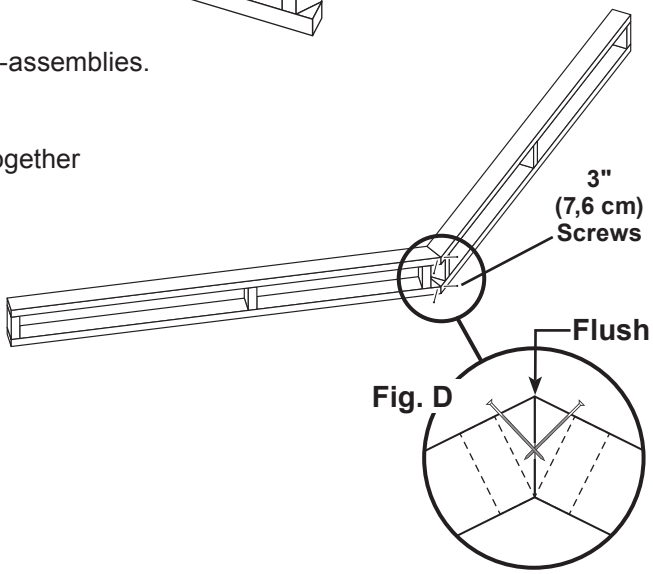

Fig. D

Repeat steps to build the 2nd gable ladder frame.

FINISH

Your (2) gable ladders are now assembled.

GABLE UNITS

PARTS REQUIRED:

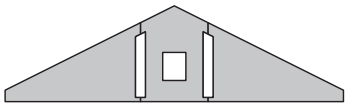

x2 Gable Units

x8 3" (7,6 cm)

x106 2" (5,1 cm)

x4 3/8 x 3-1/4 x 5-7/8" (1,0 x 8,3 x 14,9 cm)

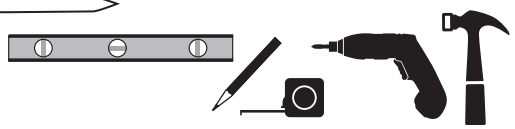

✓**BEGIN**

1 Measure 1-1/2" down from wall doubler and mark at each side as shown.
Set gable unit on top plate. Fasten with (1) 2" nail on each side.

⚠ ***CENTER GABLE UNIT ON WALL BEFORE NAILING.***

2 Continue nailing lower edge of panels to wall doubler with 2" nails spaced 6" apart.

3 Working inside, secure gable unit with (2) 3" screws angled into supports **UV** at an angle **(Fig. A)**.

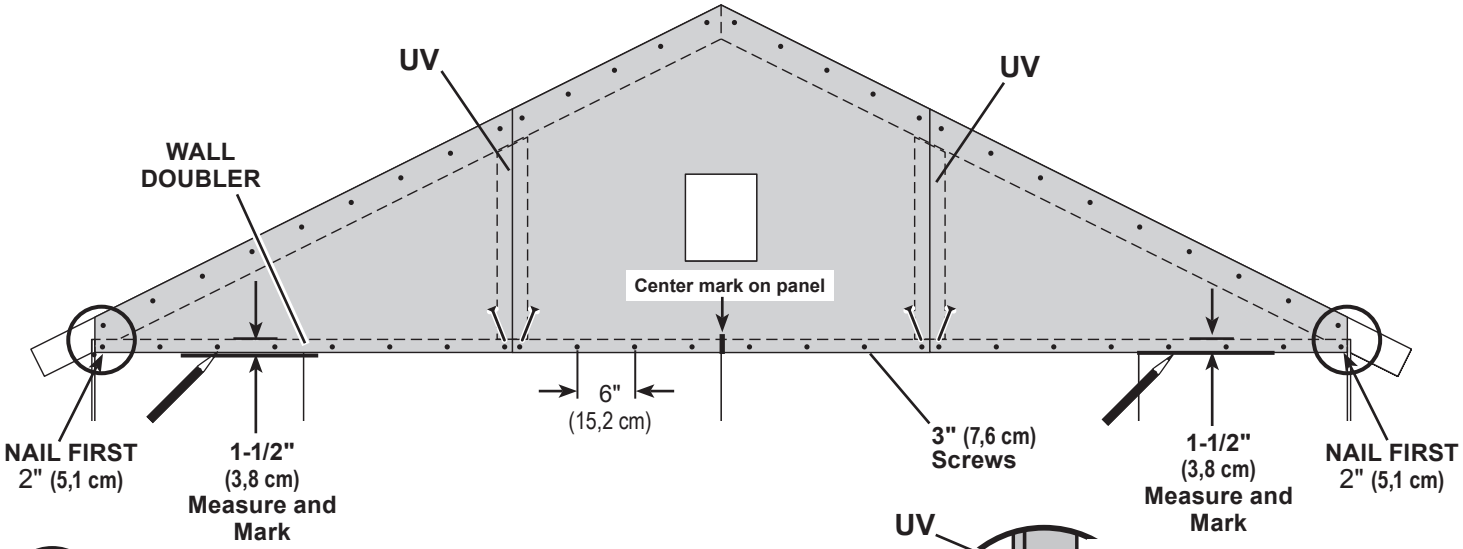

4 Secure top of gable panels to rafter with 2" nails spaced 6" apart.

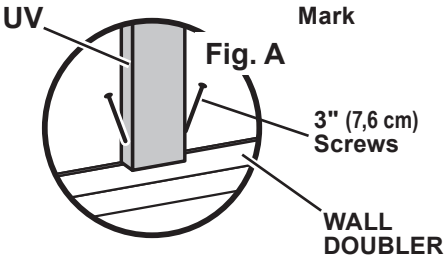

5 Install (2) 3-1/4 x 5-7/8" spacers at ends of rafters.
Flush the spacers to the rafter ends and bottom side of end-rafters.
Secure each with (2) 2" nails.

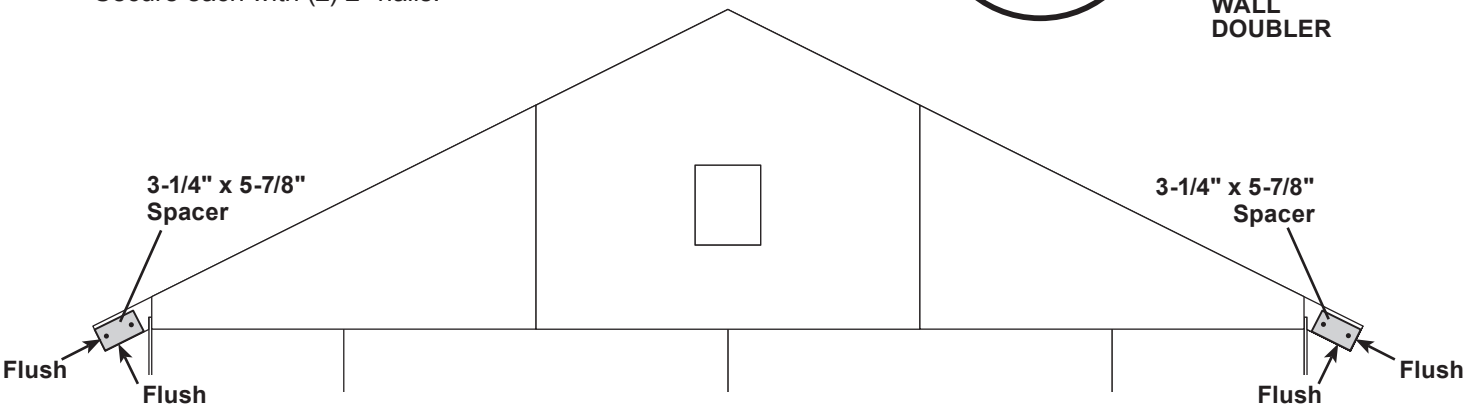

Repeat steps to install the 2nd gable unit.

FINISH

Your gable units are now installed.

GABLE OVERHANG LADDERS

PARTS REQUIRED:

x2

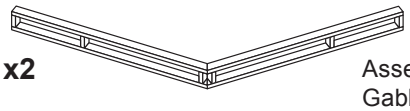

Assembled
Gable Overhang

x24

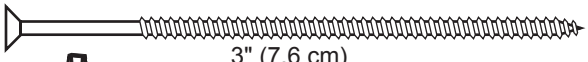

3" (7,6 cm)

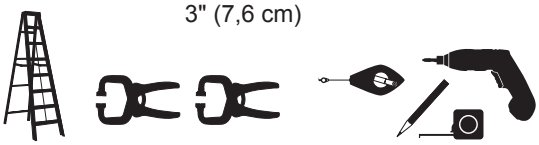

We recommend having an assistant during the installation of the gable overhang frame.

✓BEGIN

1 Lift the gable overhang into position, flush along gable panel edges.
Clamp overhang in place.

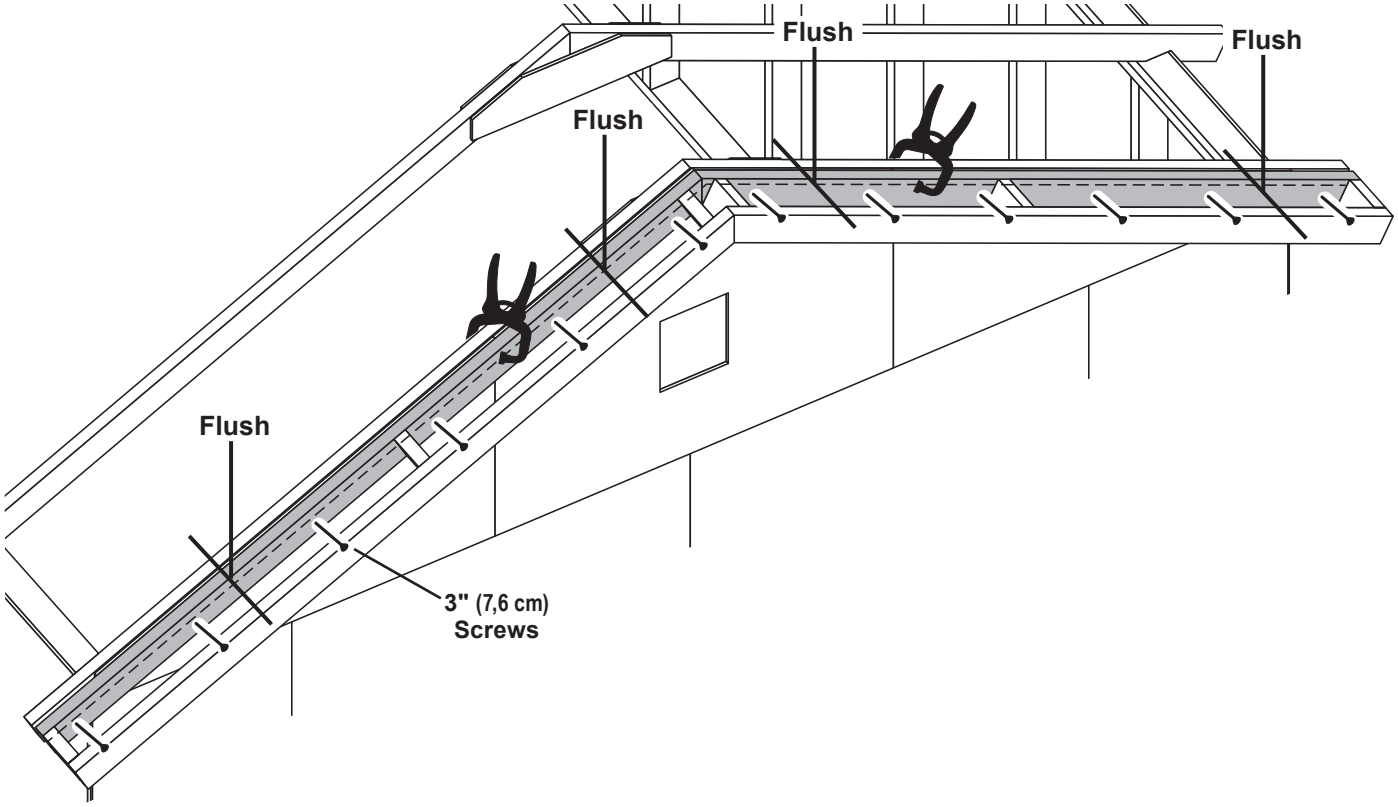

2 Secure overhang to rafter with 3" screws spaced evenly.

Repeat steps to install the 2nd gable overhang ladder.

FINISH

Your gable overhang ladders are now installed.

ROOF PANELS

PARTS REQUIRED:

x1 7/16 x 48 x 96" (1,1 x 121,9 x 243,8 cm)

GAA 3/4" GAUGE BLOCK

x4 2" (5,1 cm)

Install all roof panels with the rough side (painted grid lines) facing up.

Roof panels may cause serious injury until securely fastened.

✓BEGIN

1

Install (1) **48" x 96"** panel with a 3/4" measurement on the rafter **(Fig. A)** and the panel flush to rafter ends **(Fig. B)**.

Secure panel with (2) 2" nails in the corners.

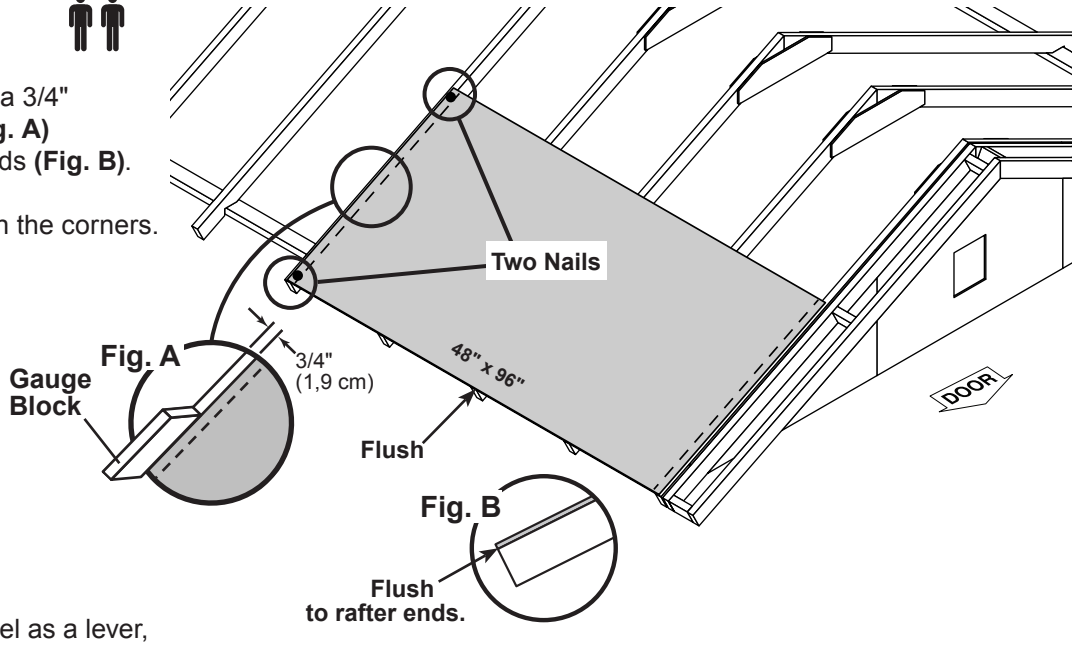

2

Move to the opposite end.
Using the long edge of the panel as a lever, move the panel side-to-side until the bottom corner is flush to rafter end **(Fig. B)**.
Secure panel with (1) 2" nail in the lower corner.

Move the gable until the end rafter's edge is 3/8" from the edge of the panel **(Fig. C)**.

Secure panel with (1) 2" nail in the corner.

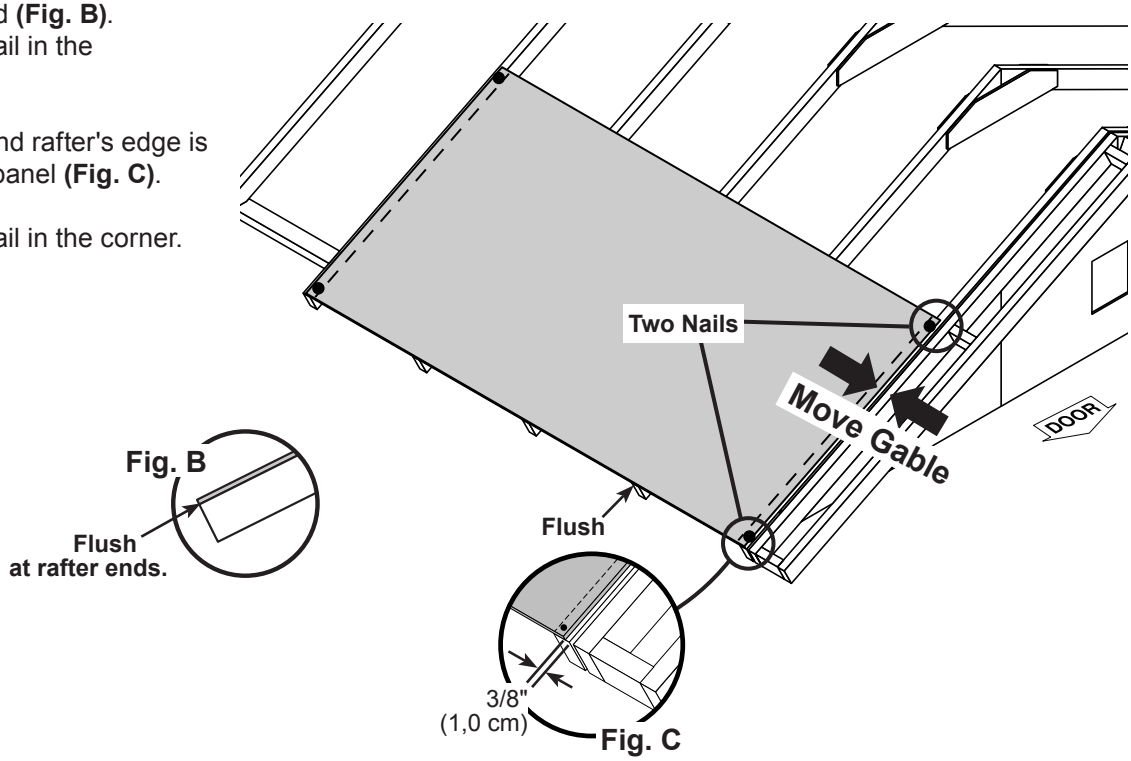

ROOF PANELS

PARTS REQUIRED:

x1 7/16 x 40-5/8 x 96" (1,1 x 103,2 x 243,8 cm)

x2 7/16 x 47-7/8 x 48" (1,1 x 121,6 x 121,9 cm)

x20 2" (5,1 cm)

3

Install (1) **47-7/8" x 48"** panel flush to installed panel and the panel flush to rafter ends **(Fig. B)**.

Secure right side of panel with (2) 2" nails in the right corners.

4

Move to the opposite end.
Move the panel side-to-side until the bottom corner is flush to rafter end **(Fig. B)**.
Secure panel with (2) 2" nails in the right corners.
Move the rafter until the panel's upper edge measures 3/4" on the rafter **(Fig. A)**.
Secure panel with (2) 2" nails in the left corners.

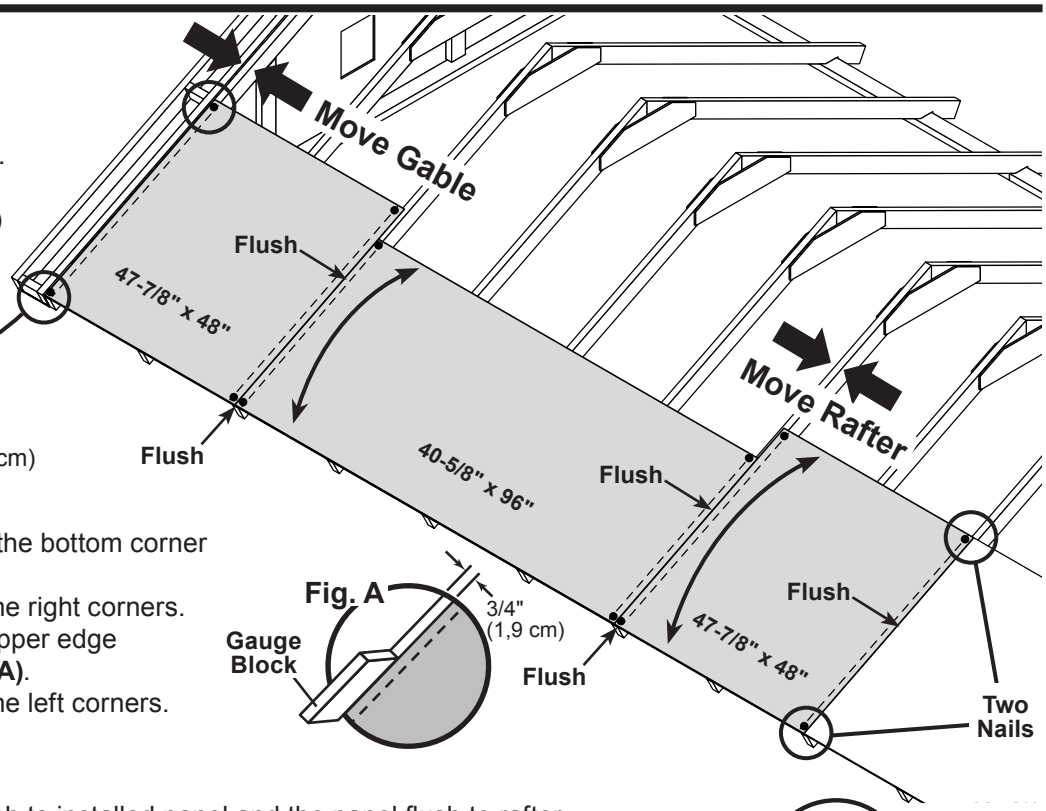

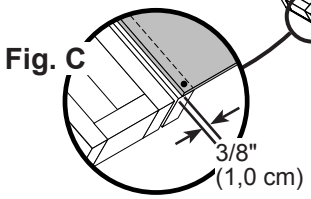

5

Install (1) **40-5/8" x 96"** panel flush to installed panel and the panel flush to rafter ends **(Fig. B)**.
Secure panel with (2) 2" nails in the right corners.
Move the rafter until the panel's upper edge measures 3/4" on the rafter **(Fig. A)**.
Secure panel with (2) 2" nails in the left corners.

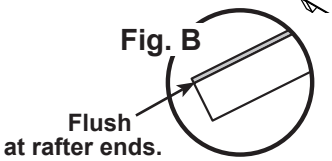

6

Install (1) **47-7/8" x 48"** panel flush to installed panel, and flush to rafter ends **(Fig. B)**.
Secure panel to the rafter with (2) 2" nails in the bottom corners.
At the opposite end of panel, move the gable until the end-rafter's edge is 3/8" from the edge of panel **(Fig. C)**.
Secure panel with (2) 2" nails in the corners.

7

Maintain spacing between the centers of the rafters and to the outside of the gable frame **(Fig. D)**.
Secure panels with (1) 2" nail in each rafter.

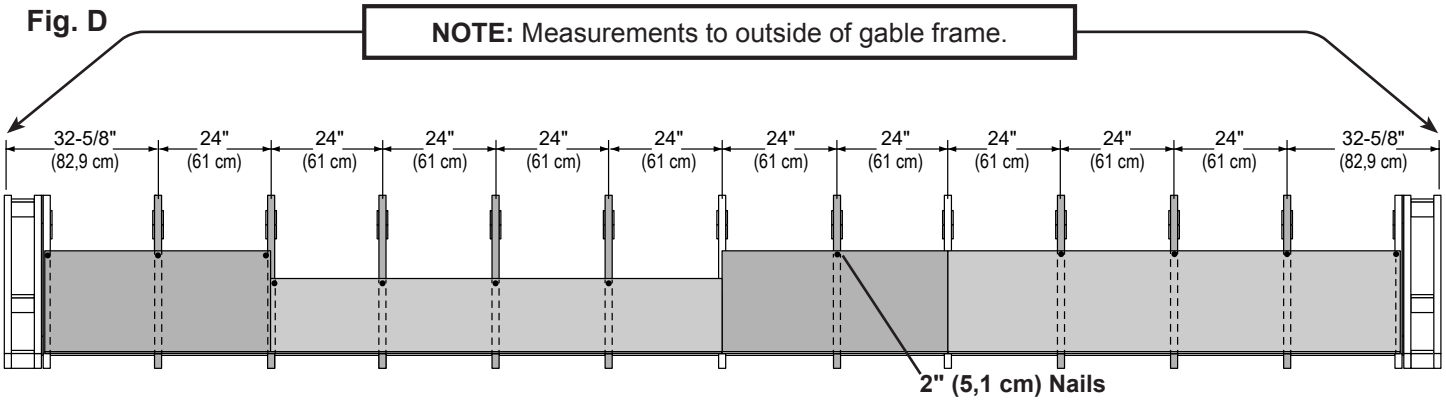

ROOF PANELS

PARTS REQUIRED:

x2 — 7/16 x 40-5/8 x 48" (1,1 x 103,2 x 121,9 cm)

GAA — 3/4" GAUGE BLOCK

x24 — 2" (5,1 cm)

x1 — 7/16 x 48 x 96" (1,1 x 121,9 x 243,8 cm)

x1 — 7/16 x 40-5/8 x 96" (1,1 x 103,2 x 243,8 cm)

8

Install (1) **40-58" x 96"** roof panel flush to the installed panel. The rafter should measure 3/4" from the panel's edge **(Fig. A)**. Secure panel with (2) 2" nails in the bottom corners. Secure panel with (1) 2" nail in the top left corner.

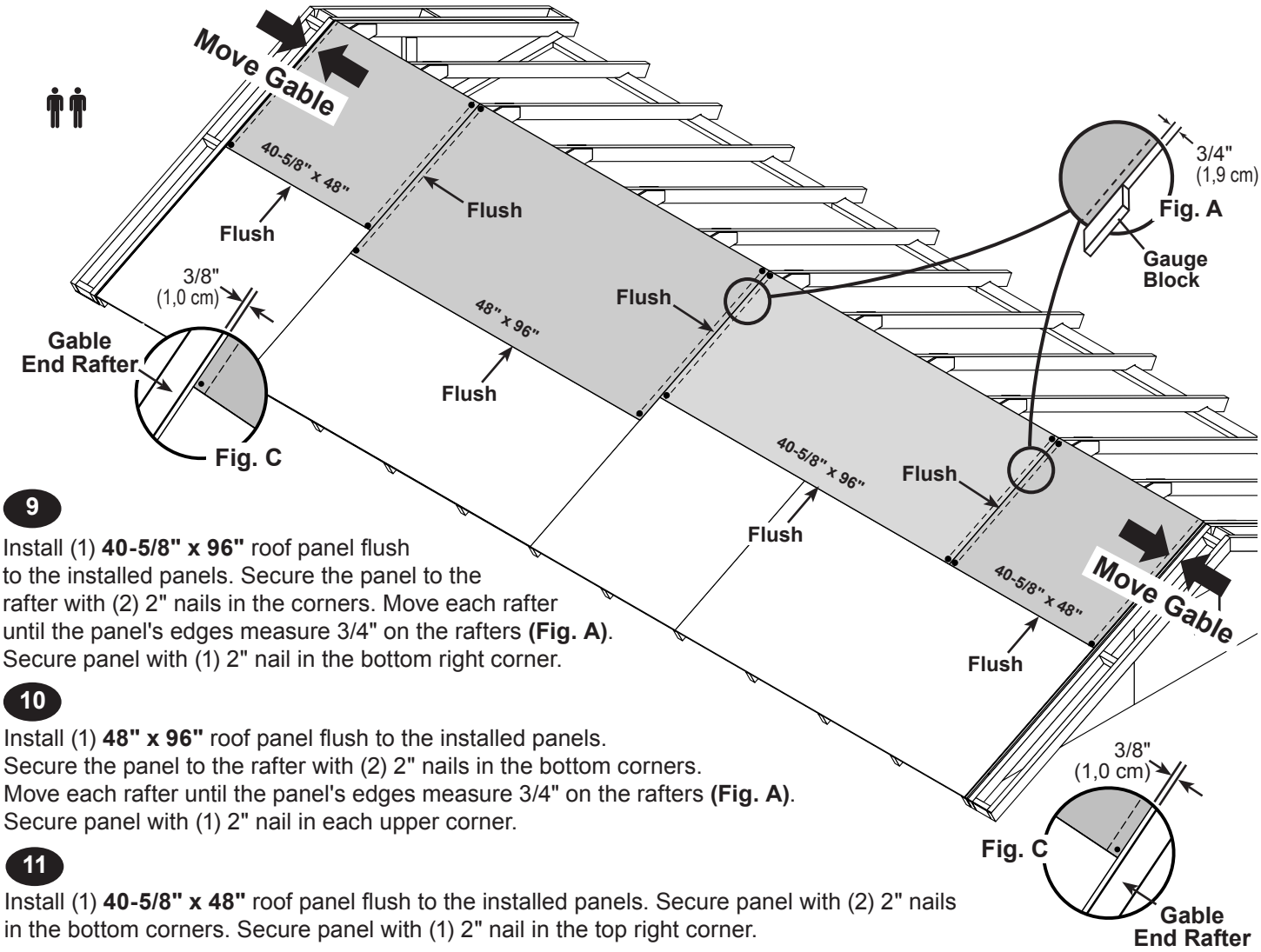

9

Install (1) **40-5/8" x 96"** roof panel flush to the installed panels. Secure the panel to the rafter with (2) 2" nails in the corners. Move each rafter until the panel's edges measure 3/4" on the rafters **(Fig. A)**. Secure panel with (1) 2" nail in the bottom right corner.

10

Install (1) **48" x 96"** roof panel flush to the installed panels. Secure the panel to the rafter with (2) 2" nails in the bottom corners. Move each rafter until the panel's edges measure 3/4" on the rafters **(Fig. A)**. Secure panel with (1) 2" nail in each upper corner.

11

Install (1) **40-5/8" x 48"** roof panel flush to the installed panels. Secure panel with (2) 2" nails in the bottom corners. Secure panel with (1) 2" nail in the top right corner.

12

Maintain spacing between the centers of the rafters **(Fig. E)**. Secure panels with (1) 2" nail in each rafter, as shown. Move each gable until the end-rafter's edge is 3/8" from the edge of the end-panel **(Fig. C)**. Secure end-panels to end-rafters with (1) 2" nail in the upper corner.

Fig. E

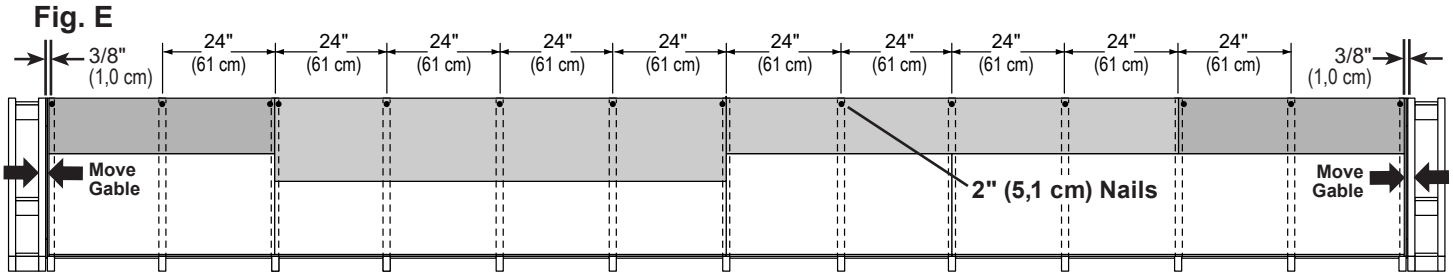

ROOF PANELS

PARTS REQUIRED: **x2** 7/16 x 8-5/8 x 88-5/8" (1,1 x 21,9 x 225,1 cm) **x504** 2" (5,1 cm)

13

Install (2) **8-5/8" x 88-5/8"** panels flush to lower ends of gable frame and rafter, and flush to outside edge of gable frame.

Secure with (1) 2" nail in each corner.

14

Secure all panels with 2" nails spaced 6" apart along panel edges and 12" apart inside panel.

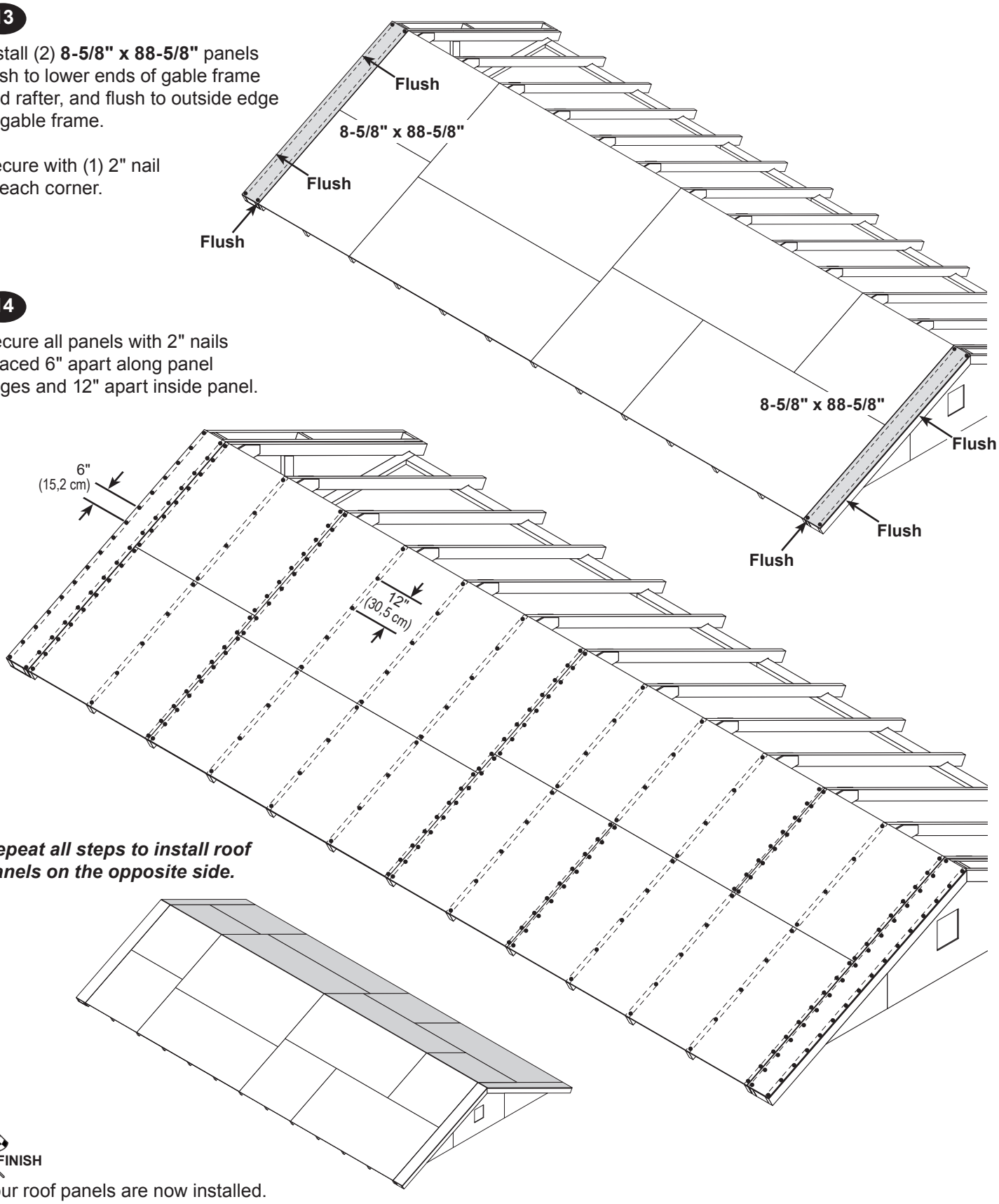

Repeat all steps to install roof panels on the opposite side.

FINISH

Your roof panels are now installed.

GABLE SOFFIT PANELS

PARTS REQUIRED:

x4 3/8 x 7-7/8 x 86-3/4" (1 x 20 x 220,3 cm)

x72 2" (5,1 cm)

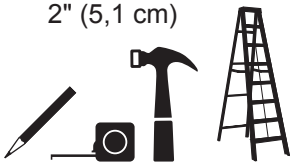

Install all soffit panels with the primed side facing out.

✓BEGIN

1 Install (2) **86-3/4"** soffit panels flush to gable panel and flush to gable ends. Secure with 2" finishing nails spaced evenly.

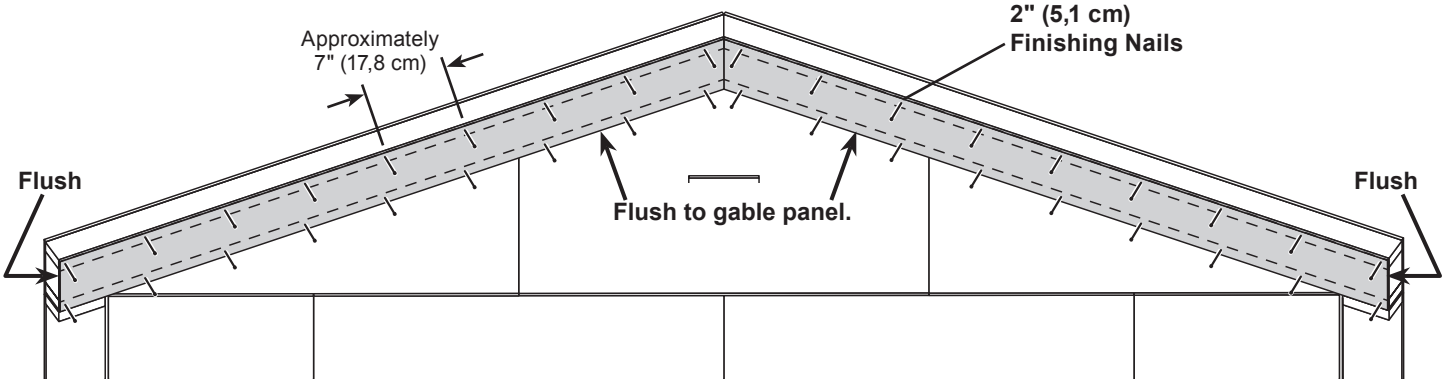

Repeat steps to install soffit boards on the opposite side.

FINISH

Your soffit panels are now installed.

EAVE SOFFIT PANELS

PARTS REQUIRED:

x64 — 2" (5,1 cm)

x2 — 5-7/8 x 96" (14,9 x 243,8 cm)

x4 — 5-7/8 x 73" (14,9 x 185,4 cm)

x2 — 5-7/8 x 48" (12,1 x 121,9 cm)

Install all soffit panels with the primed side facing out.

✓BEGIN

1

Install (1) **48"** soffit panel centered between 4th and 6th rafters **(Fig A)**. Flush panel to rafter ends **(Fig B)**.
Secure with 2" finishing nails, (2) in each rafter **(Fig B)**.
Angle nails at the seam-end **(Fig. C)**.

2

Install (1) **96"** soffit panel flush to installed panel **(Fig A)**.
Flush panel to rafter ends **(Fig B)**.
Secure with 2" finishing nails, (2) in each rafter **(Fig B)**.
Angle nails at seam-ends **(Fig. C)**.

3

Install (2) **73"** soffit panels flush to installed panel **(Fig A)**.
Flush panel to rafter ends **(Fig B)**.
Secure with 2" finishing nails, (2) in each rafter **(Fig B)**.
Angle nails at seams **(Fig. C)**.

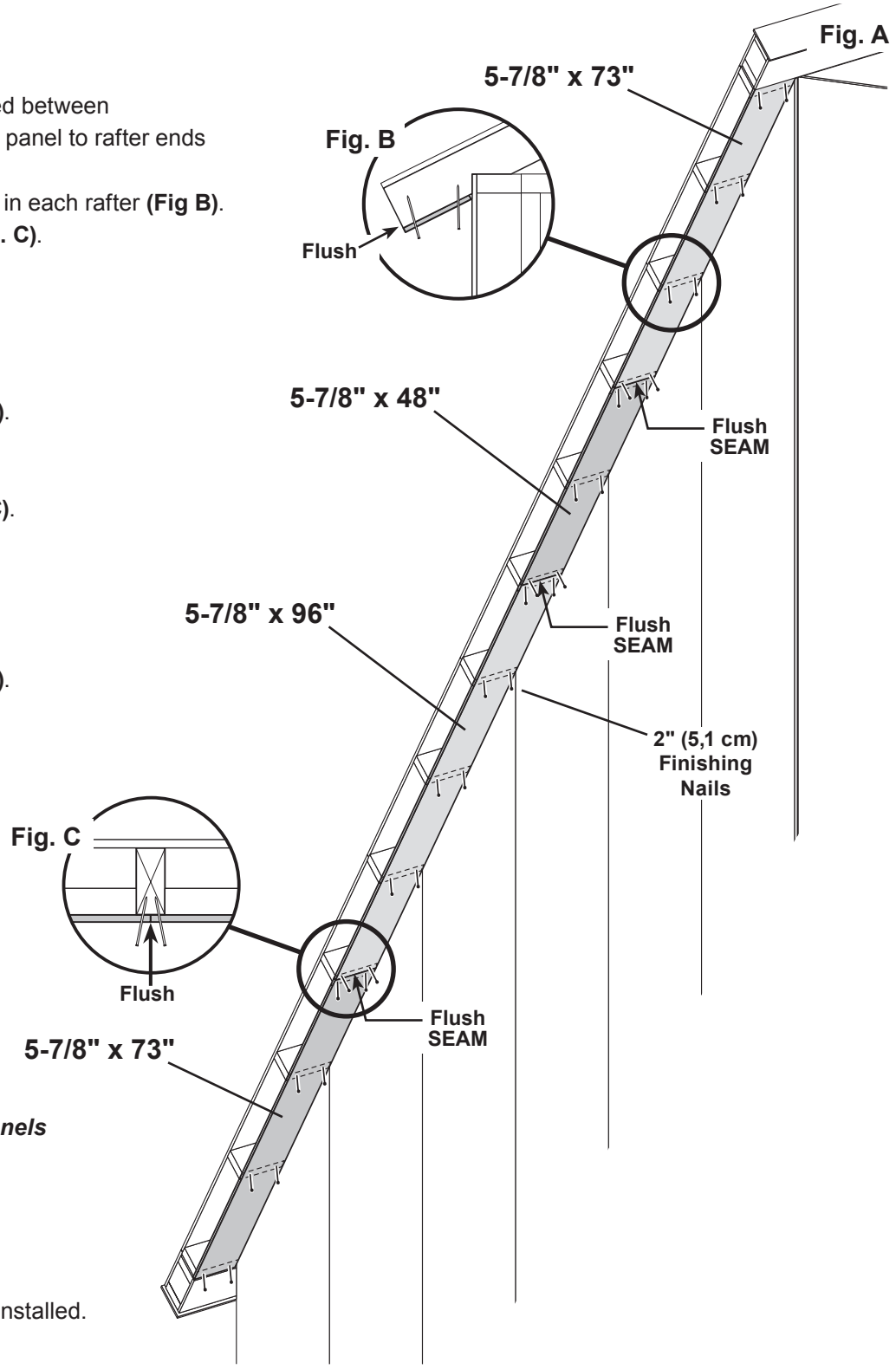

Repeat to install eave soffit panels on opposite side.

FINISH

Your eave soffit panels are now installed.

GABLE FASCIA

PARTS REQUIRED:

x32 2" (5,1 cm)

x2 **Painted Green**
3/8 x 4-3/4 x 89-1/4" (1 x 12,1 x 226,7 cm)

x2 **Painted Red**
3/8 x 4-3/4 x 89-1/4" (1 x 12,1 x 226,7 cm)

Install all trim with the primed side facing out.

BEGIN

1 Install fascia flush to peak and roof panels as shown **(Fig. A, Fig B)**.
Secure with 2" finishing nails spaced evenly as shown.

Hint: Pre-set nails in fascia before final installation.

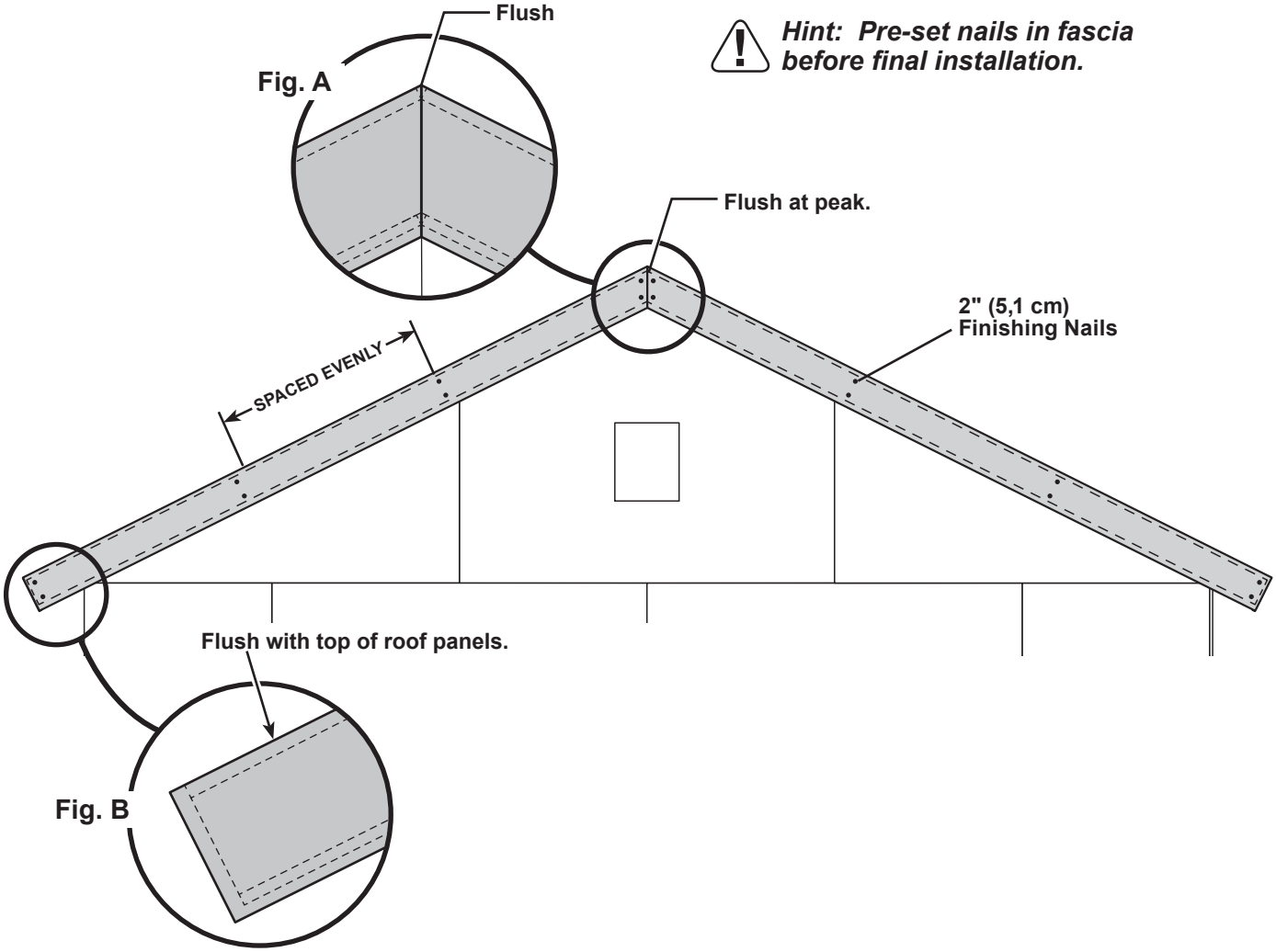

Repeat steps to install fascia on the opposite side.

FINISH

Your gable fascia boards are now installed.

EAVE SIDE FASCIA

PARTS REQUIRED:

x72 2" (5,1 cm)

x2 3/8 x 4-3/4 x 96" (1 x 12,1 x 243,8 cm)

x4 3/8 x 4-3/4 x 80-7/8" (1 x 12,1 x 205,4 cm)

x2 3/8 x 4-3/4 x 48" (1 x 12,1 x 121,9 cm)

Install all trim with the primed side facing out.

✓BEGIN

1 Install (1) **4-3/4" x 96"** (1) **4-3/4" x 48"** fascia boards flush with roof panels and flush to center seam **(Fig. A, Fig. B)**.

Secure with 2" finishing nails, (2) in each rafter and (4) nails at seam **(Fig B)**.
Angle nails at seam.

2 Install (2) **4-3/4" x 80-7/8"** fascia boards flush with roof panels and flush to center seam **(Fig. A, Fig. B)**.

Secure with 2" finishing nails, (2) in each rafter and (4) nails at seam **(Fig B)**.
Angle nails at seam.

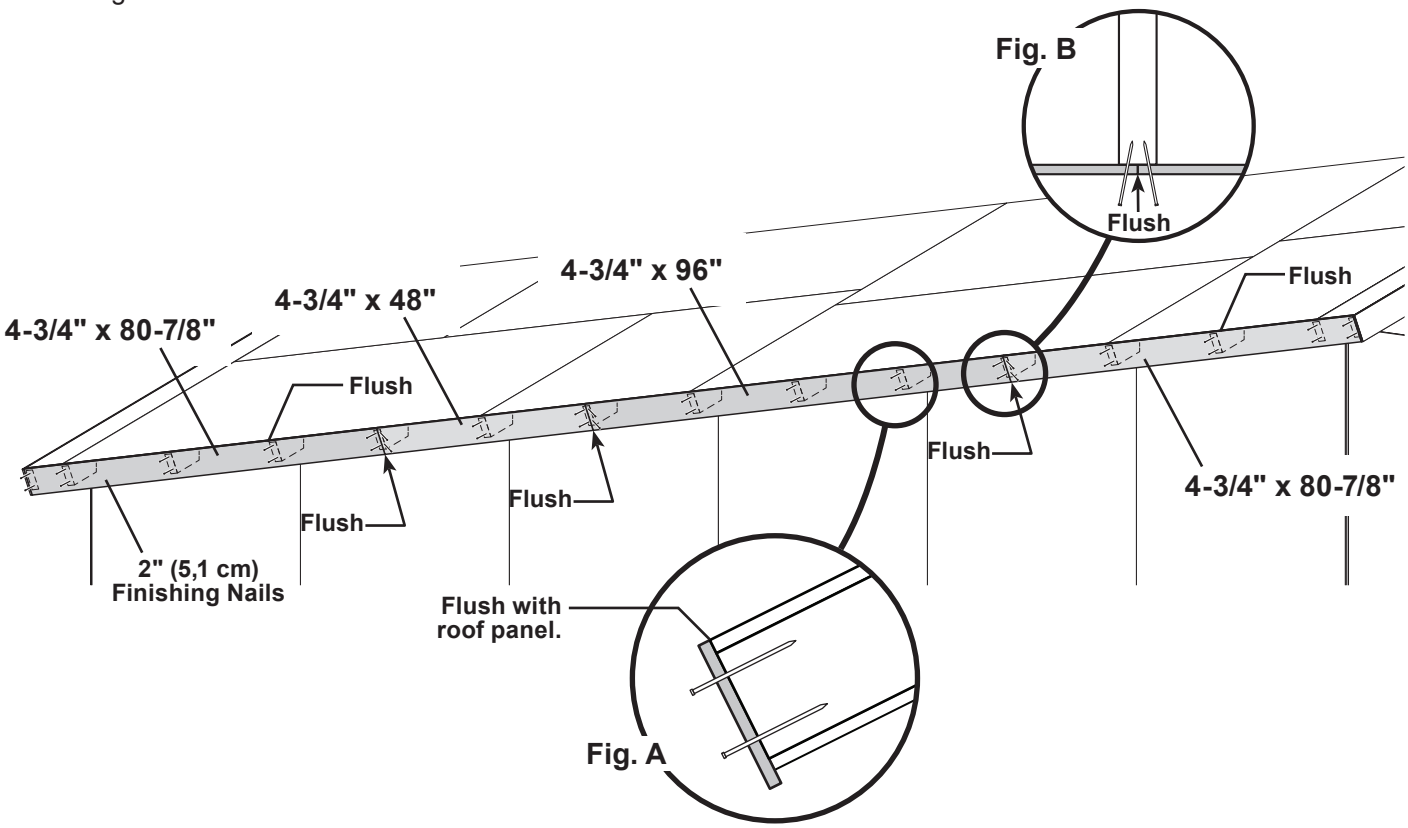

Repeat steps to install fascia on opposite eave.

FINISH

Your eave side fascia boards are now installed.

DOORS

PARTS REQUIRED:

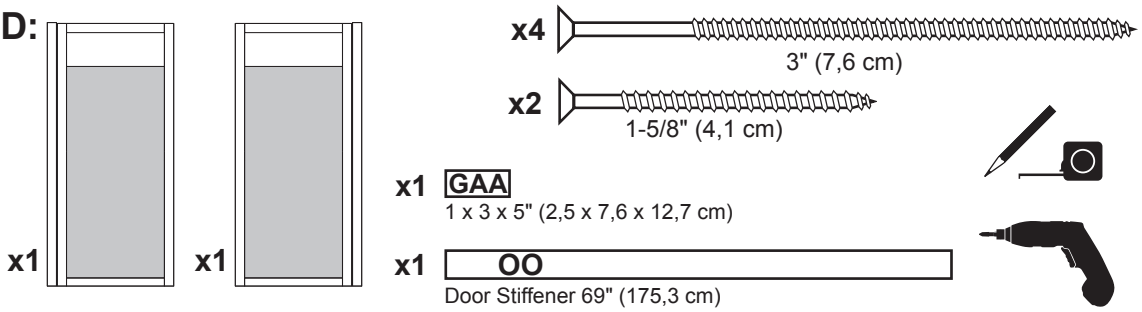

✓BEGIN

1. Arrange parts as shown on flat surface. ⚠ **3/8" offset is to top.**
   Look for red (right) and green (left) on hinge board.

2. Install temporary support **OO** and secure with 3" screws in middle and at ends, as shown.

3. Install and secure temporary support **GAA** with (2) 1-5/8" screws.

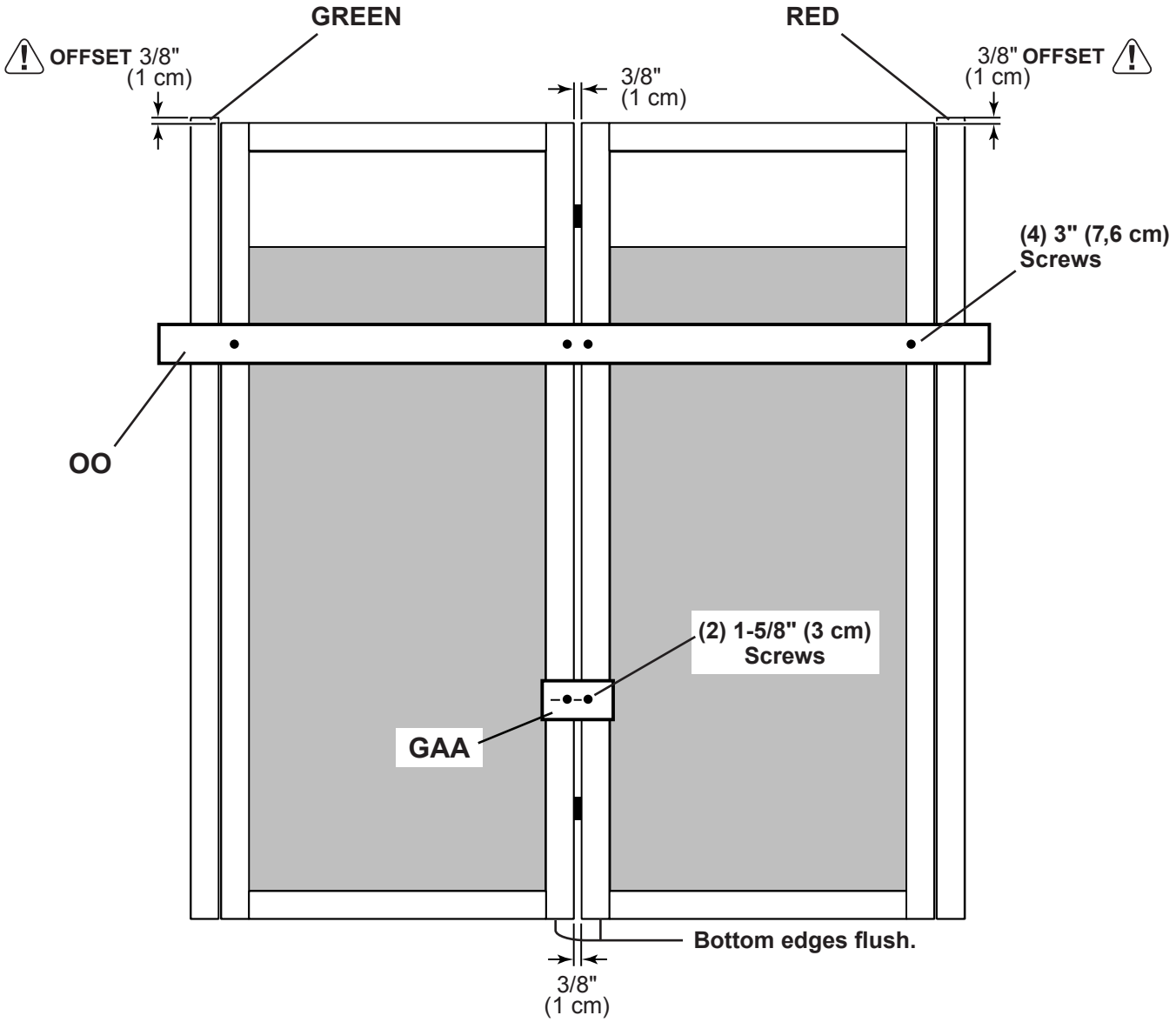

DOORS

PARTS REQUIRED:

x1 OO
69" Door Stiffener (175,3 cm)

x12 3" (7,6 cm)

4 Install temporary support **OO** as a ledger board flush under wall panels for doors to rest on. Secure with (2) 3" screws **(Fig. A)**.

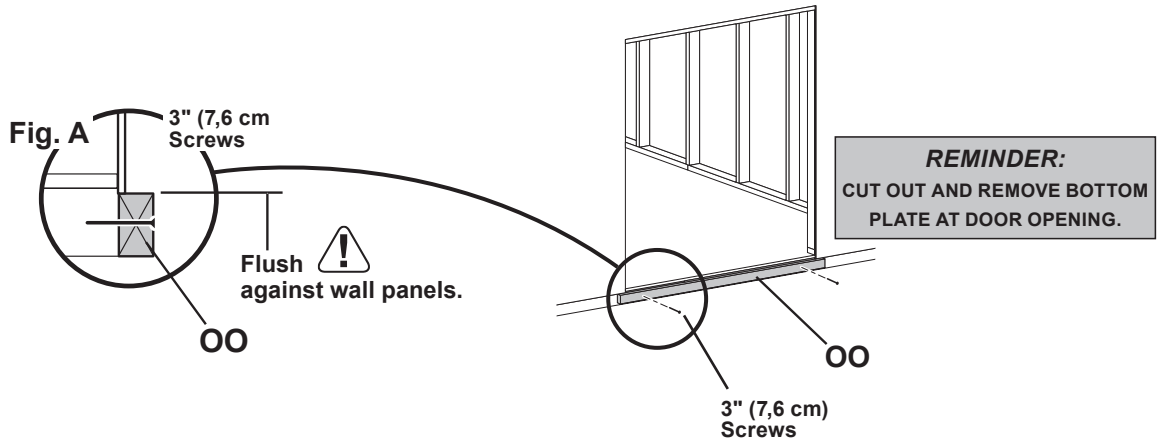

5 Center doors on panel seam, as shown **(Fig. B)**.

6 Screw hinge boards into wall supports and floor with (10) 3" screws, as shown.
Make sure screws go into framing and floor (Fig. C, D).

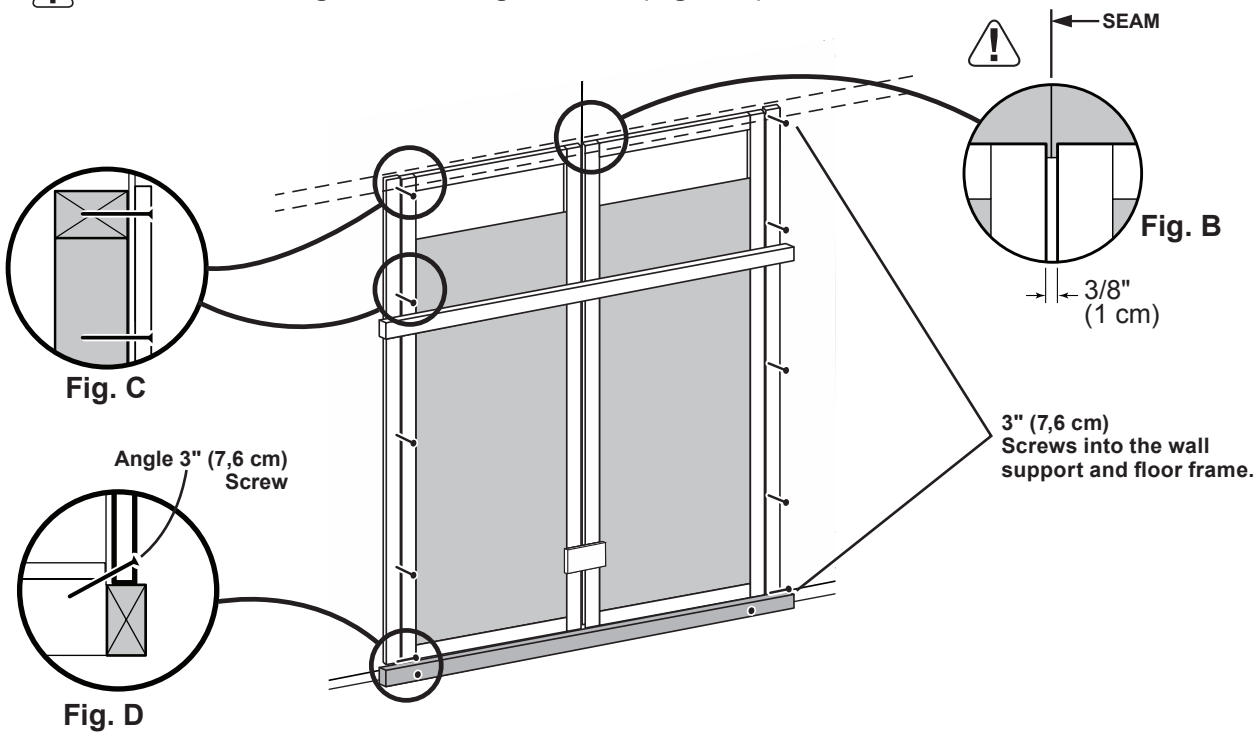

FINISH

Your doors are now installed.

Remove temporary support and ensure that the doors open properly.

DOOR TRIM

PARTS REQUIRED:

x4 **AH**
19/32" x 2-1/2" x 26-5/8" (1,5 x 6,3 x 67,6 cm)

x1 **ZJ**
19/32 x 3 x 72" (1,5 x 7,6 x 183 cm)

3/4" (1,9 cm) x11
Bagged seperately / special coating

x1
64" Metal Threshold

x5
2" (5,1 cm)

x56
3/4" (1,9 cm)

See page 61 for 2 additional door trim options.

✓**BEGIN**

1. Secure door trim from inside using 3/4" screws **(Fig. A)**.
2. Secure two horizontal door rails **AH** with (4) 3/4" screws from behind to center of doors.
3. Reinforce the door trim with 3/4" screws through door panel into trim **(Fig. A)**. Locate screws as shown **(Fig. B)**.
4. Center trim **ZJ** over doors and secure using (5) 2" finish nails into wall framing.

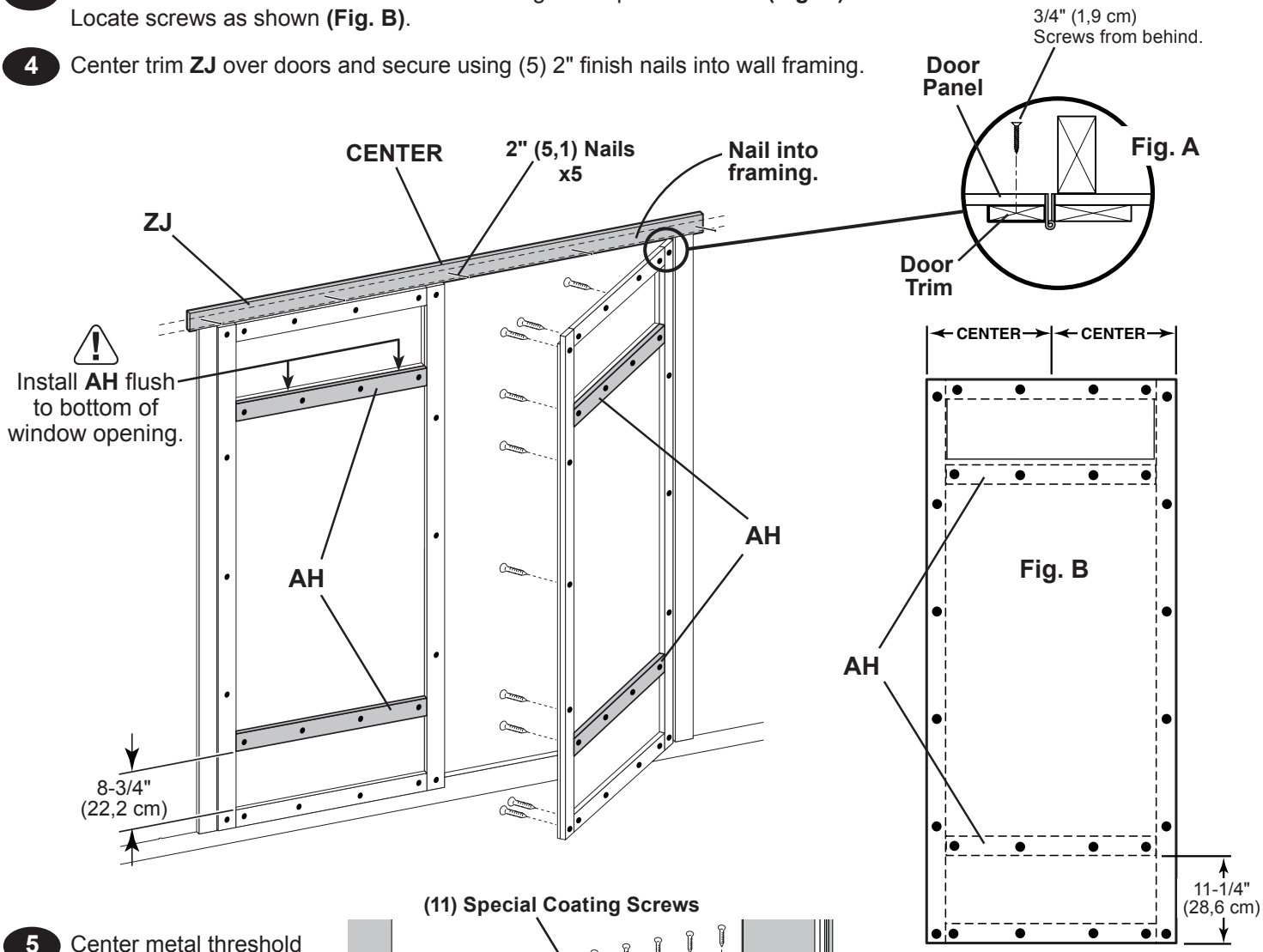

5. Center metal threshold between doors. Secure with (11) 3/4" special coating screws (**Fig, C**).

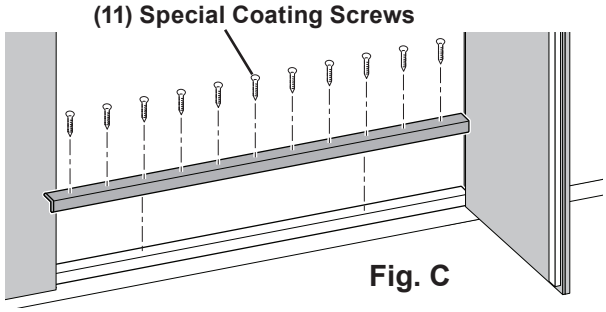

FINISH

Your door and trim are now secured

DOOR TRIM OPTIONS

PARTS REQUIRED:

x4 **AH**
19/32" x 2-1/2" x 26-5/8" (1,5 x 6,3 x 67,6 cm)

x2 **DKA**
19/32" x 2-1/2" x 44-1/8" (1,5 x 6,3 x 112,1 cm)

Follow standard door trim installation steps on page 60.

Choose from 2 additional trim designs for your doors.

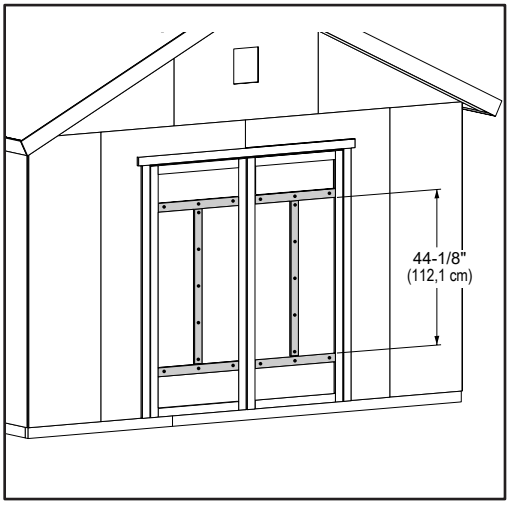

x56 3/4" (1,9 cm)

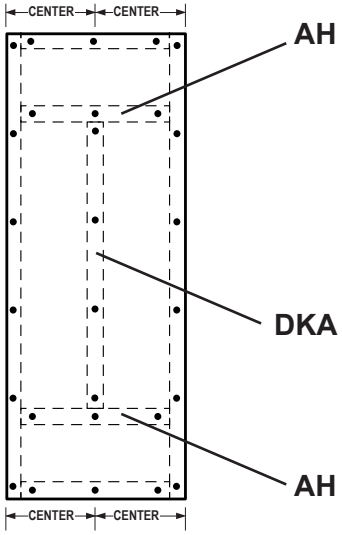

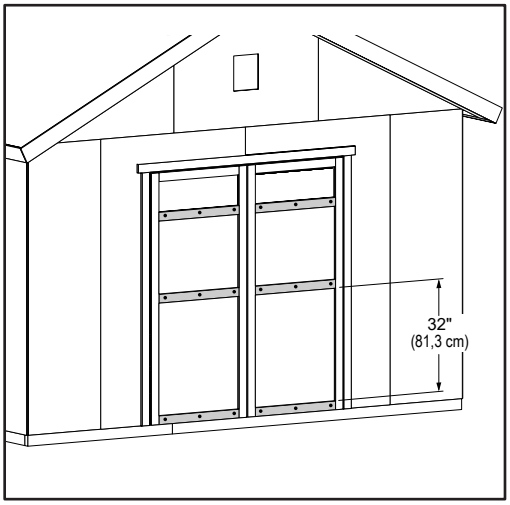

x48 3/4" (1,9 cm)

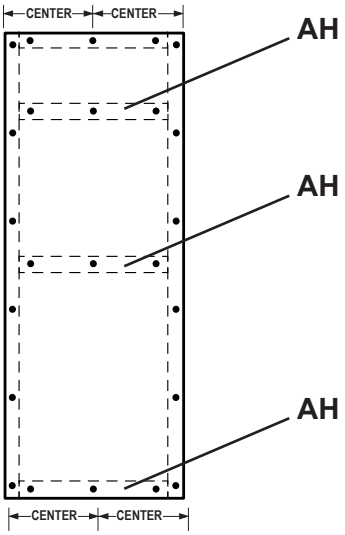

DOOR TRANSOM WINDOWS

PARTS REQUIRED:

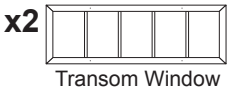

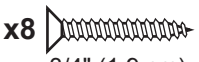

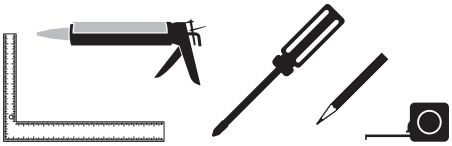

BEGIN

1 Apply high quality exterior-grade caulk behind frame near edge before installing to seal window.

You must caulk completely around window frame and all exposed door panel edges and trim to validate your warranty. Use a paintable exterior rated caulk.

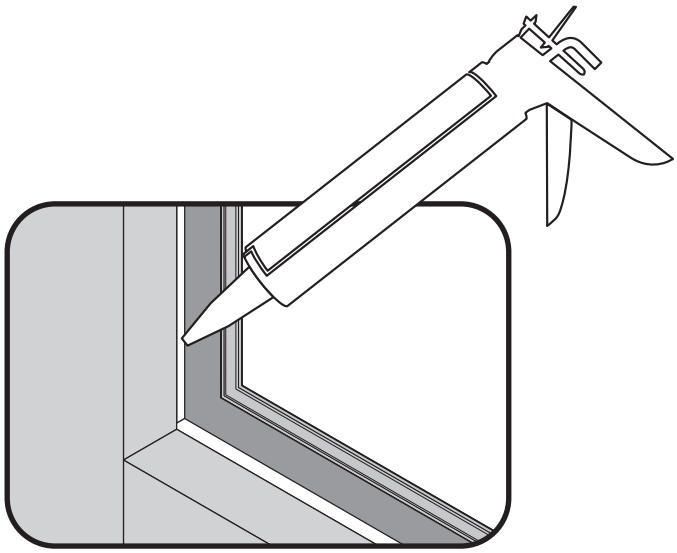

FRONT SIDE VIEW

2 From back side of door, measure 15-13/16" from inside edge of door.
Mark center of window opening on door.

Position window in opening flush to bottom of window opening. Center window on mark.

Secure with (4) screws to secure each window.

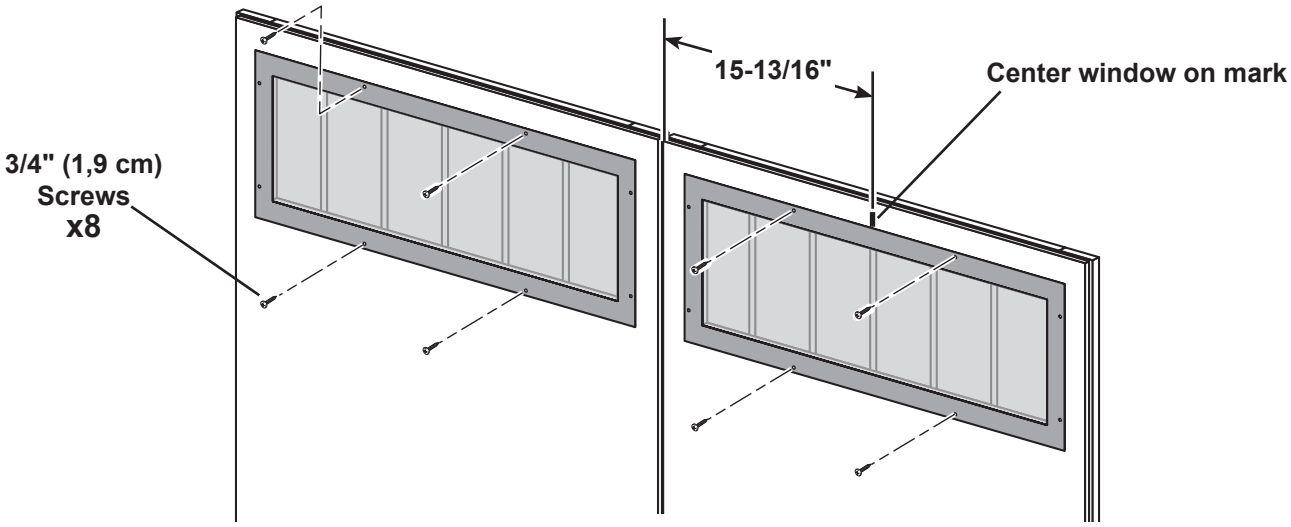

BACK SIDE OF DOORS

FINISH

Your transom windows are installed.

DOOR STIFFENERS

PARTS REQUIRED:

x14 2" (5,1 cm)

x2 OO
69" Door Stiffener (175,3 cm)

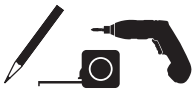

✓BEGIN

1. Center **OO** vertically on the left door in the door opening flush with the edge of door **(Fig. A)**.

2. Secure with (7) 2" screws through outside trim into **OO (Fig. B)**

Repeat steps to install OO on right door.

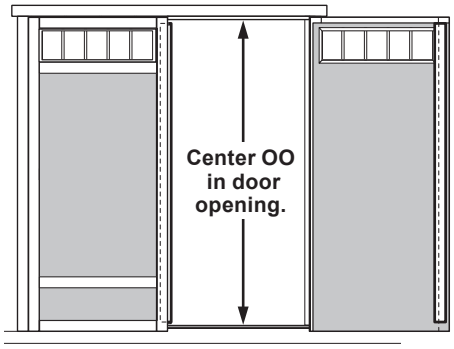

Fig. A

IT IS IMPORTANT TO HOLD THESE DIMENSIONS

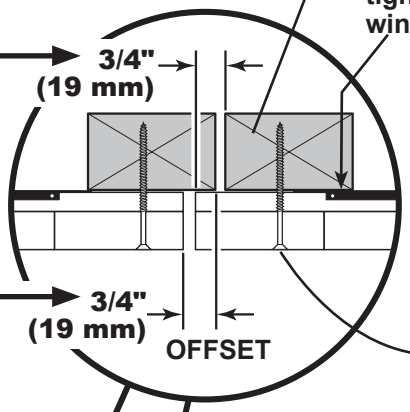

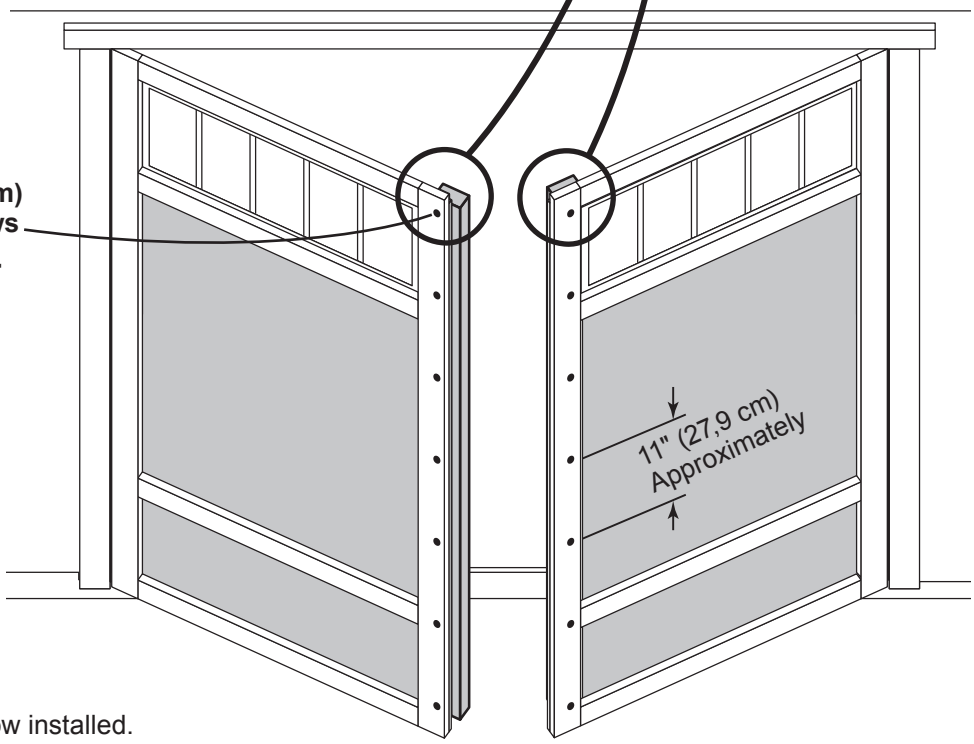

FINISH

Your door stiffeners are now installed.

DOOR HARDWARE

PARTS REQUIRED: **x6** **x18** 1" (2,5 cm)

1/2" (13 mm) Drill Bit

1/4" (6 mm) Drill Bit

BEGIN

1 Measure and mark location of hole on outside of right door as shown **(Fig. A)**. Pre-drill hole with 1/4" drill.

2 Re-drill hole with 1/2" drill **(Fig. B)**.

Keep drilled hole square to trim to avoid breaking edge of door stiffener OO.

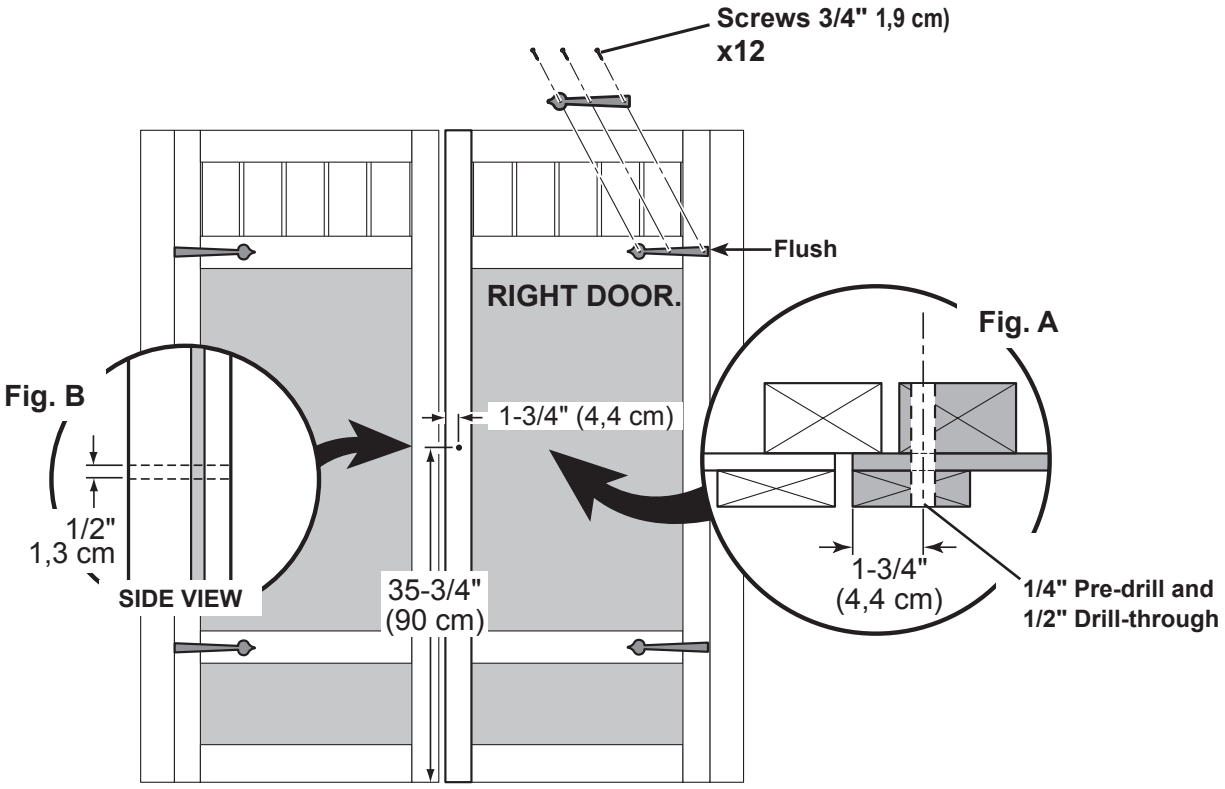

3 Install decorative hinges on horizontal trim and flush against hinge, as shown.
Your choice of door trim layout may use (6) hinges.

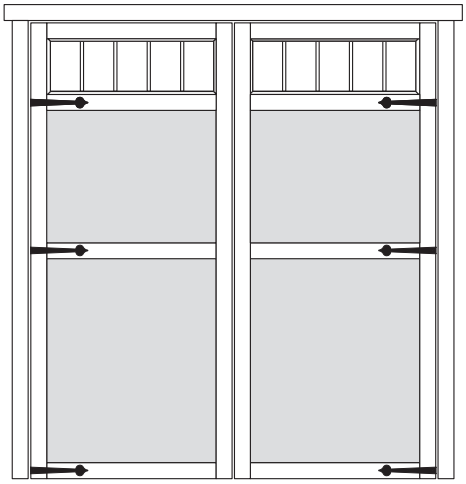

FINISH

Your door is now prepared for handle installation.

DOOR HARDWARE

PARTS REQUIRED:

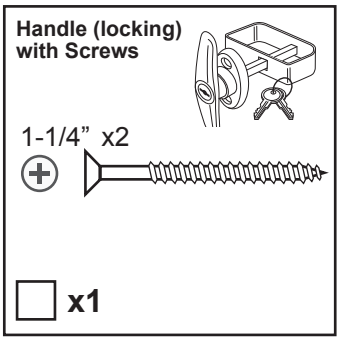

4 Secure handle with 1-1/4" screws, as shown.

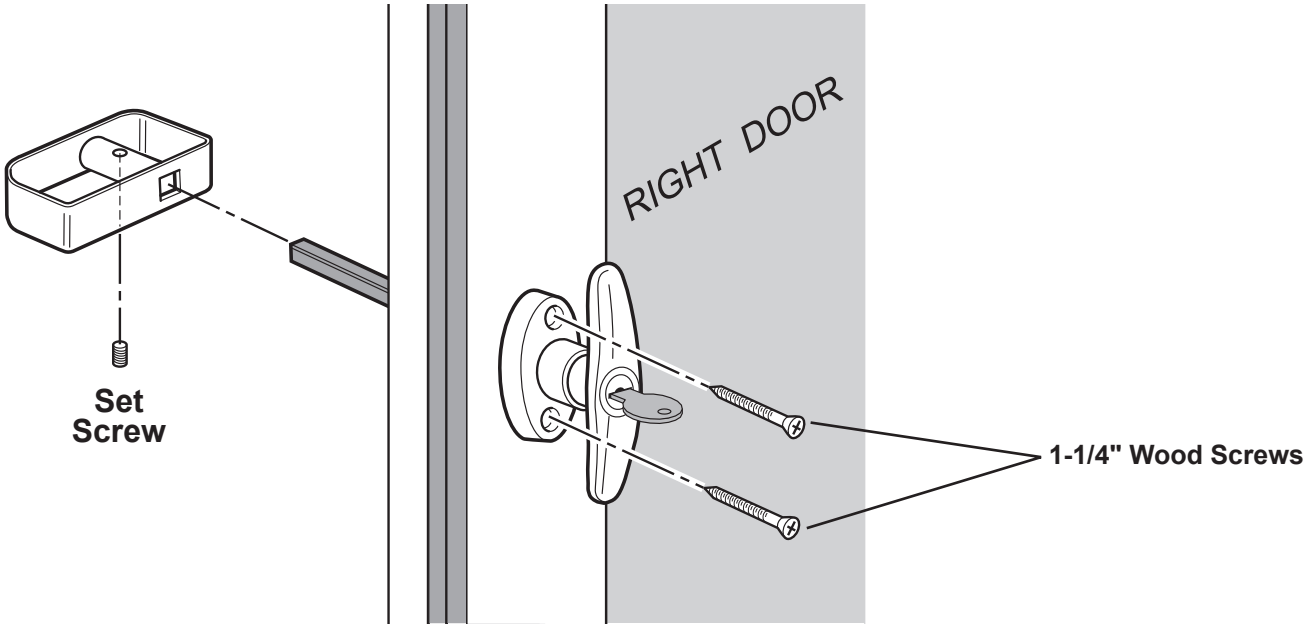

FINISH

Your door hardware is now installed.

DOUBLE DOOR HARDWARE

PARTS REQUIRED:

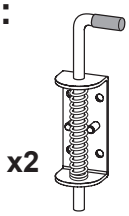

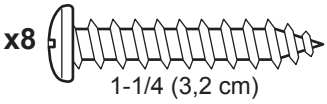

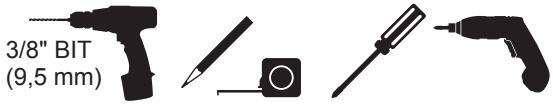

✓BEGIN

1 Flush and center top spring bolt at the top of **OO (Fig. A)**. Secure with (4) 1-1/4" screws.
Mark spring bolt pin location on over door frame. Drill a 1-1/2" deep hole using a 3/8" drill bit.

2 Flush and center bottom spring bolt to bottom of **OO (Fig. B)**. Secure with (4) 1-1/4" screws.
Mark spring bolt pin location on floor.
Drill a 1-1/2" deep hole using a 3/8" drill bit.

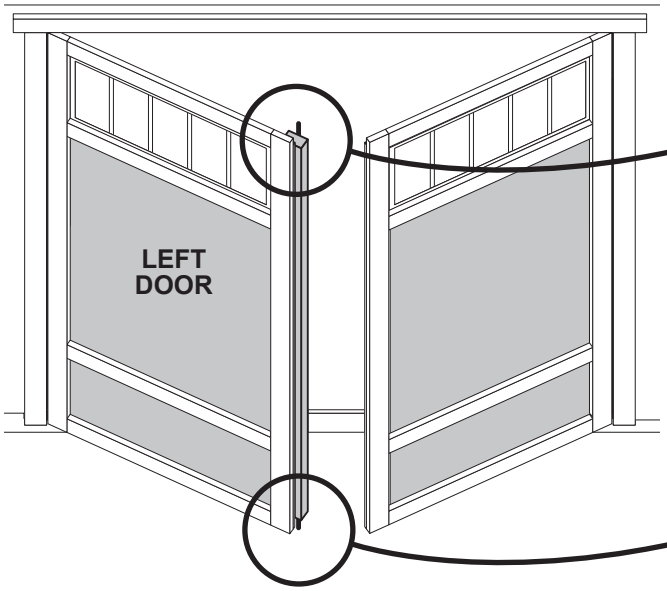

Fig. A

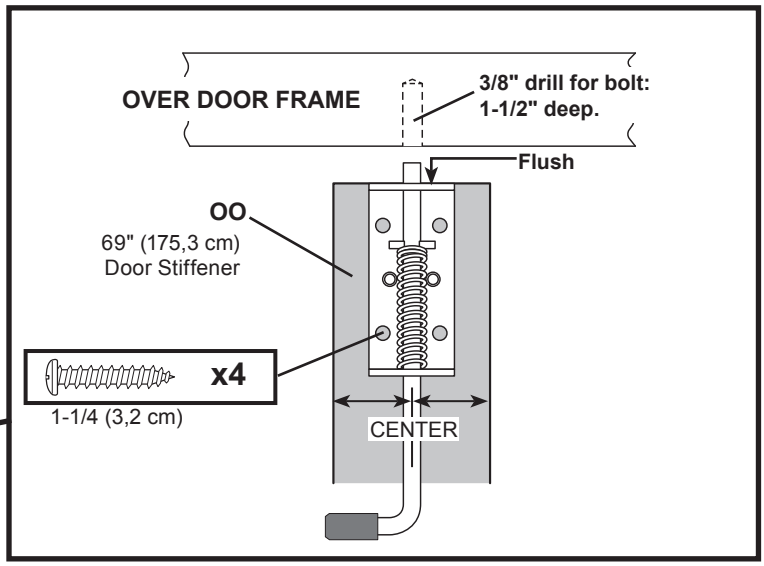

Fig. B

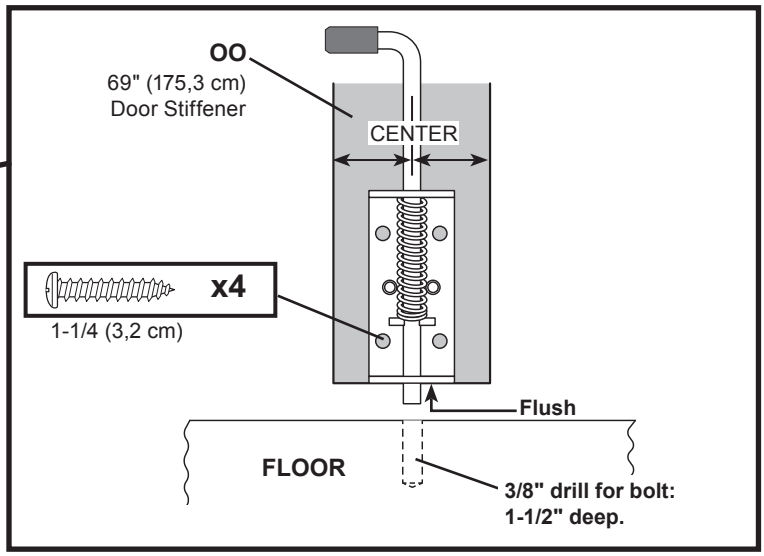

FINISH

Your spring bolts are now installed.

CORNER TRIM

PARTS REQUIRED:

x4 3/8 x 1-3/4 x 82-1/2" (1 x 4,4 x 209,6 cm)

x4 3/8 x 1-3/4 x 81-7/8" (1 x 4,4 x 208 cm)

x64 2" (5,1 cm)

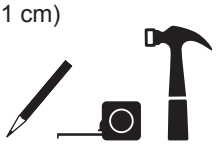

BEGIN

1 Install gable end **82-1/2"** corner trim flush to gable panel **(Fig. A)** and flush with eave wall panel **(Fig. B)**. Secure with 2" finishing nails spaced evenly.

2 Install eave side **81-7/8"** corner trim flush to eave soffit and flush along seam of installed corner trim **(Fig. C)**. Secure with 2" finishing nails spaced evenly.

Repeat steps to install trim to all four corners.

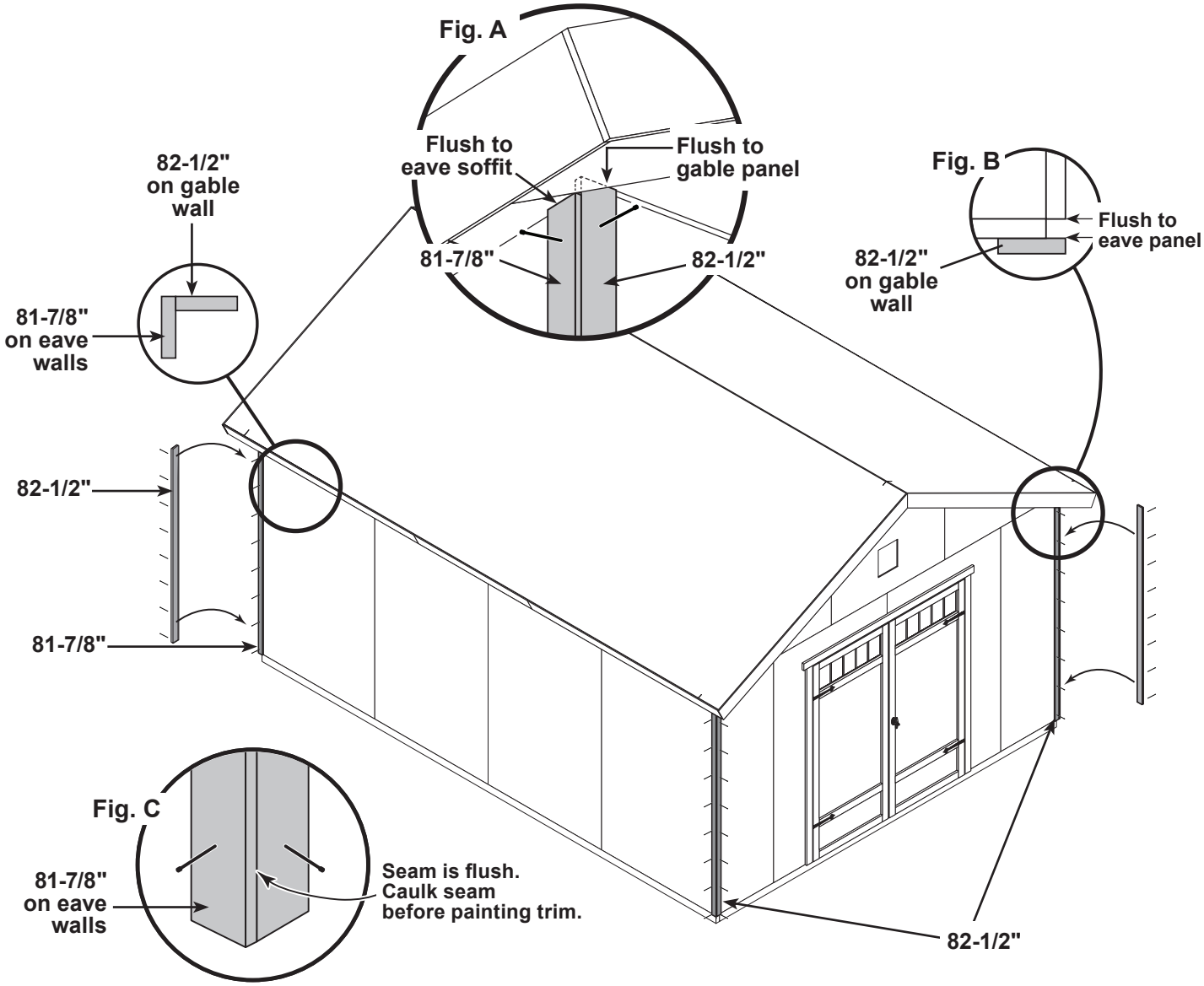

FINISH

Your corner trim is now installed.

NOTE:
16' x 12' Shed Image Shown.

COLLAR TIE INSTALLATION

PARTS REQUIRED:

x5 **WTA**
1 x 4 x 84" (2,6 x 10,2 x 213,4 cm)

x30
2" (5,1 cm)

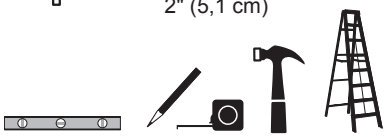

BEGIN

1 Install collar tie to the rafter with (3) 3" nails at each end **(Fig. A)**.

Starting at the wall to the right of the door, install first collar tie on the 2nd rafter from the eave wall and then on ***every other*** rafter, as shown.

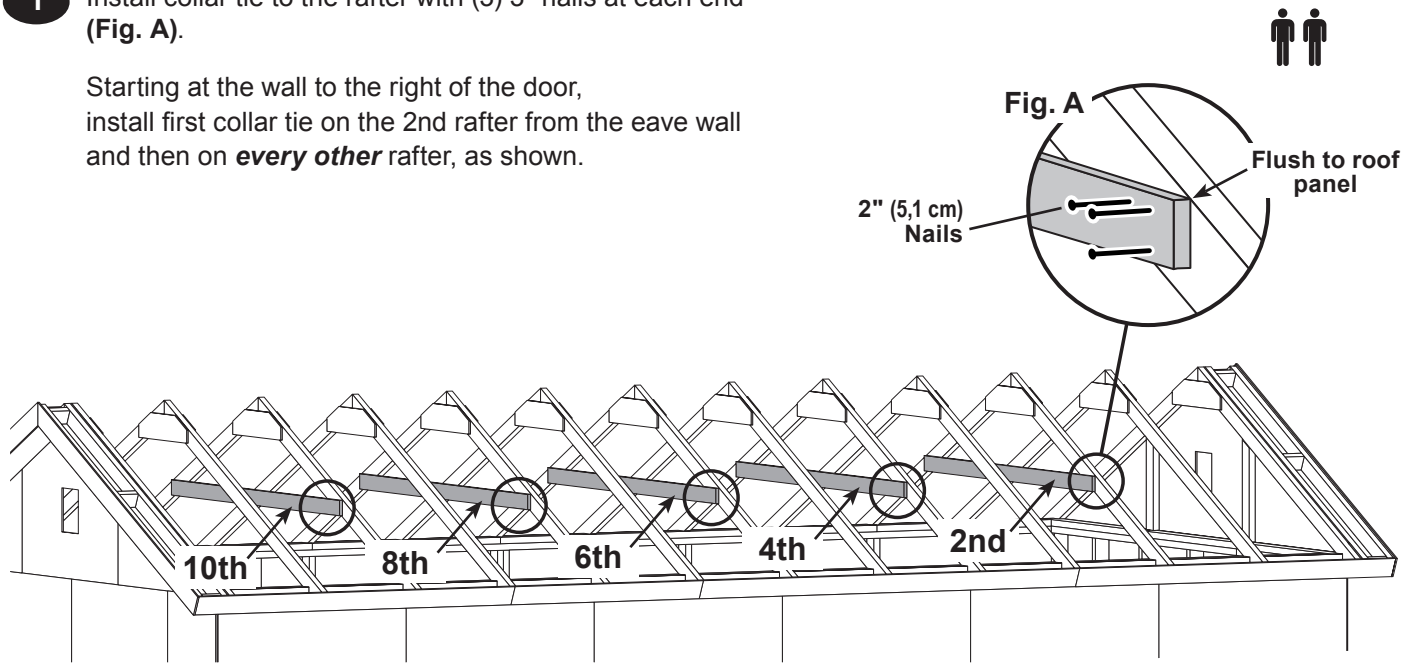

HINT:
For best appearance, install collar ties on side of rafter away from door.

FINISH
Your collar ties are now installed.

GABLE VENTS

PARTS REQUIRED:

x2

x8

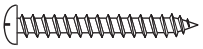

#8 x 1" (2,5 cm)
Pan Head Screws

BEGIN

1 Install vent in the gable panel.
Seal vent from behind with exterior grade caulk before installing.

Secure vent with 1" screws.

Repeat to install 2nd vent in the opposite gable.

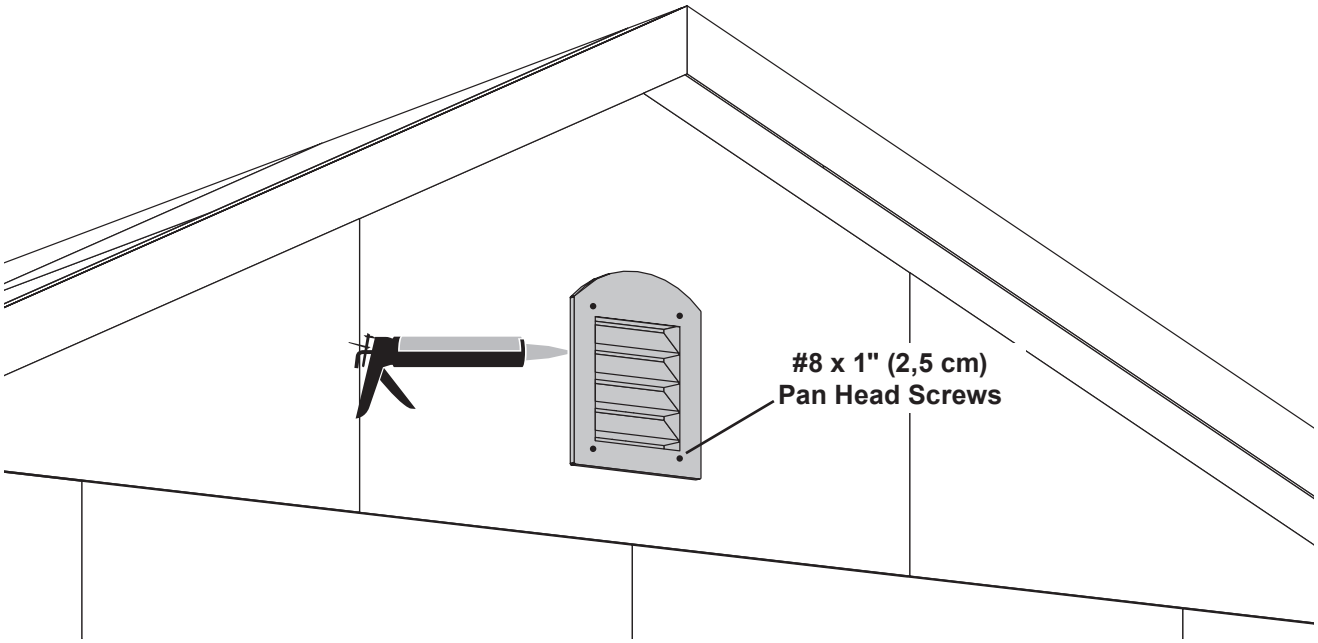

FINISH

Your gable vents are now installed.

WINDOW INSTALLATION

If you purchased a shed with a window, please see instructions located in the window kit for installing your window.

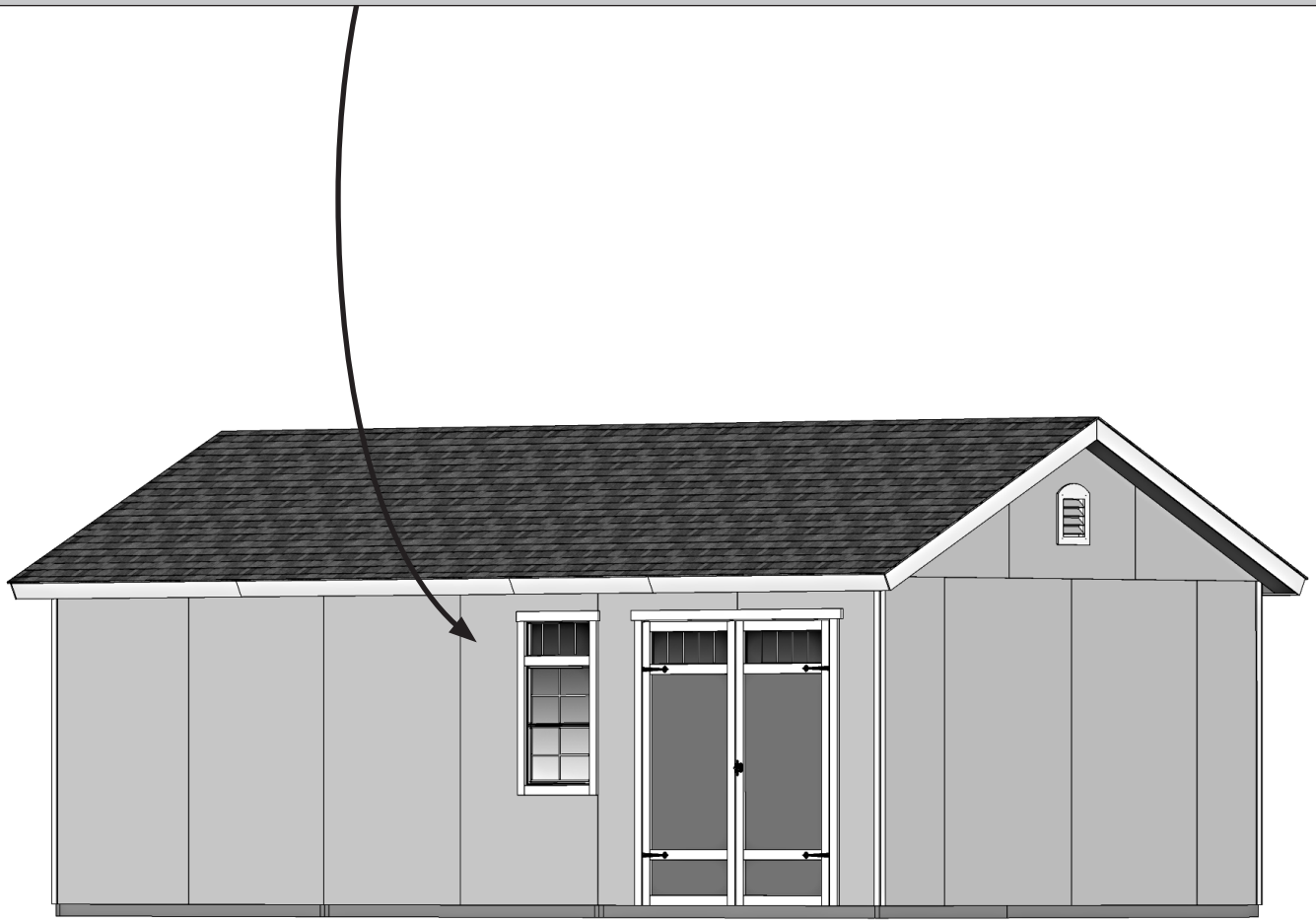

PAINT & CAULK
- NOT INCLUDED -

- Use acrylic latex caulk that is paintable. Caulk at all horizontal and vertical seams, between the trim and walls, and all around the door trim.

- Use a high quality exterior acrylic latex paint. When painting your building, there are a few key areas that can be easily overlooked that must be painted:
  - Bottom edge of all siding and trim
  - Inside of doors and all 4 edges

Note:
Prime all un-primed exterior wood before painting.
(Follow directions provided by manufacturer.)

ROOF FELT
- NOT INCLUDED -

- Install felt flush to all roof edges overlapping 3". Use minimal amount of roofing nails to hold in place.

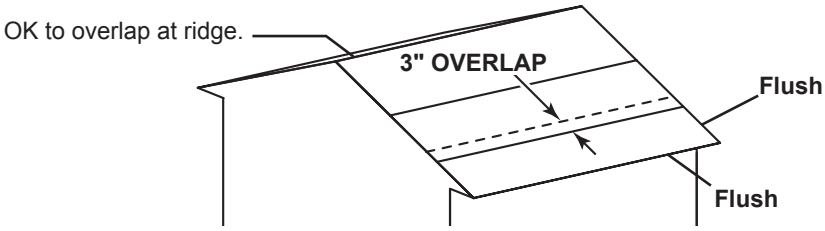

DRIP EDGE
- NOT INCLUDED -

- Install drip edge over roof felt on gable side and under roof felt on eave side **(Fig. A)**.
- Do not use nails on side of drip edge that hangs over side of building.
- Only nail top of drip edge as shown.

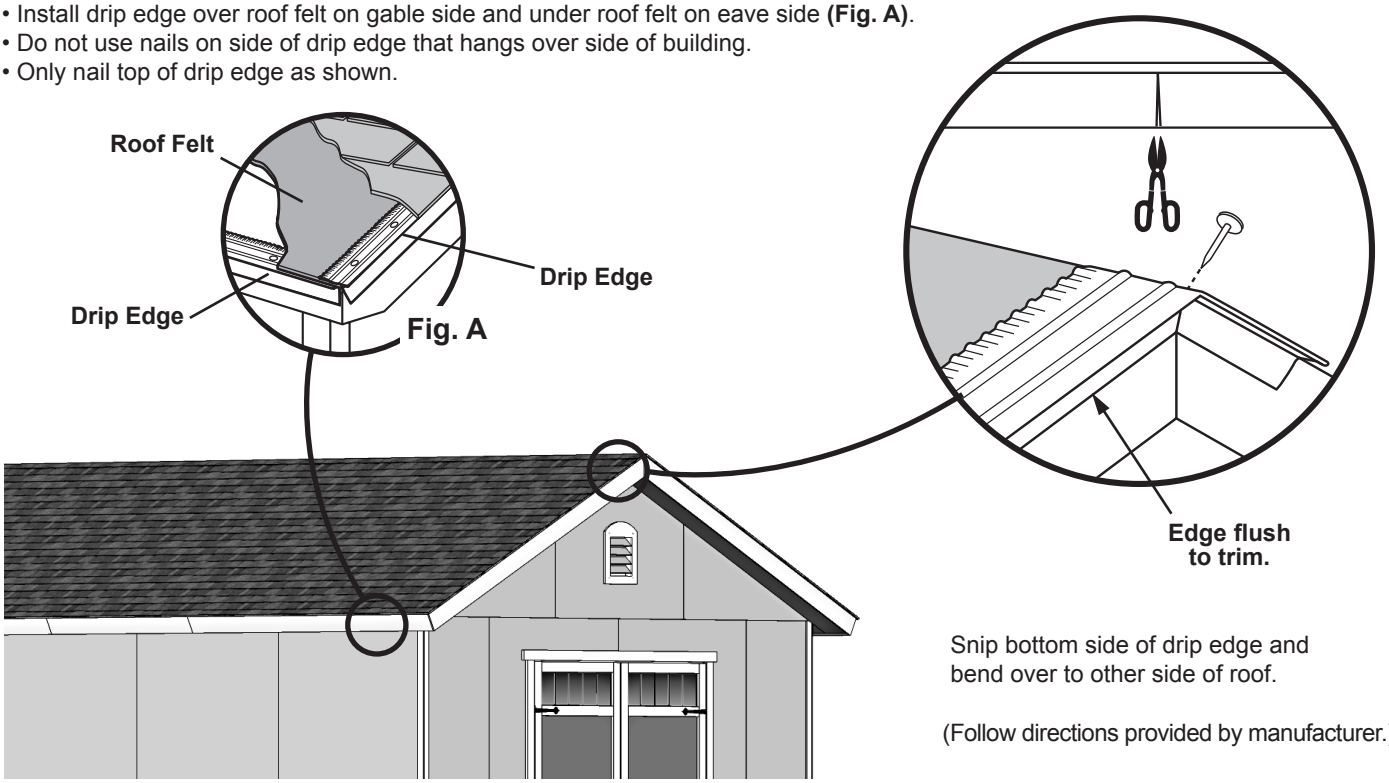

Snip bottom side of drip edge and bend over to other side of roof.

(Follow directions provided by manufacturer.)

SHINGLES
- NOT INCLUDED -

• **Follow directions provided by manufacturer and these instructions.**

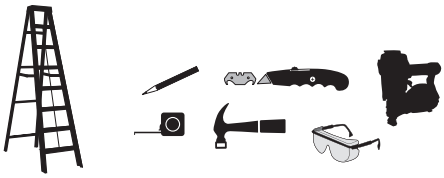

⚠ **Familiarize yourself with a 3-Tab Shingle.**

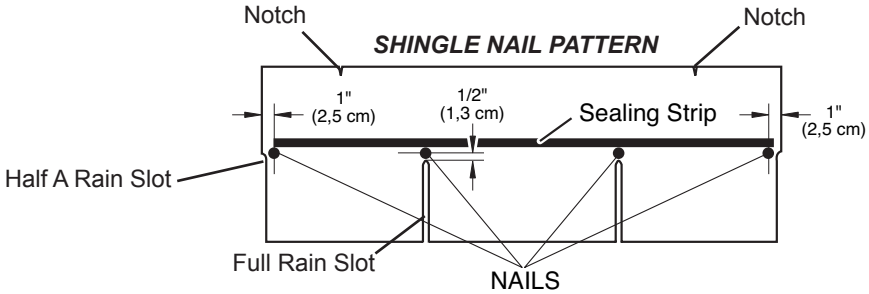

⚠ **NEVER DRIVE FASTENERS INTO OR ABOVE SEALING STRIPS.**

✓**BEGIN**

1 Install first starter row upside down and color up with a 1" overhang at back and bottom of roof panel. Use (4) nails per shingle.
Starter row must be straight and level all the way across with lower edge of roof deck.
NOTE: If you have installed drip edge install shingles flush to drip edge.

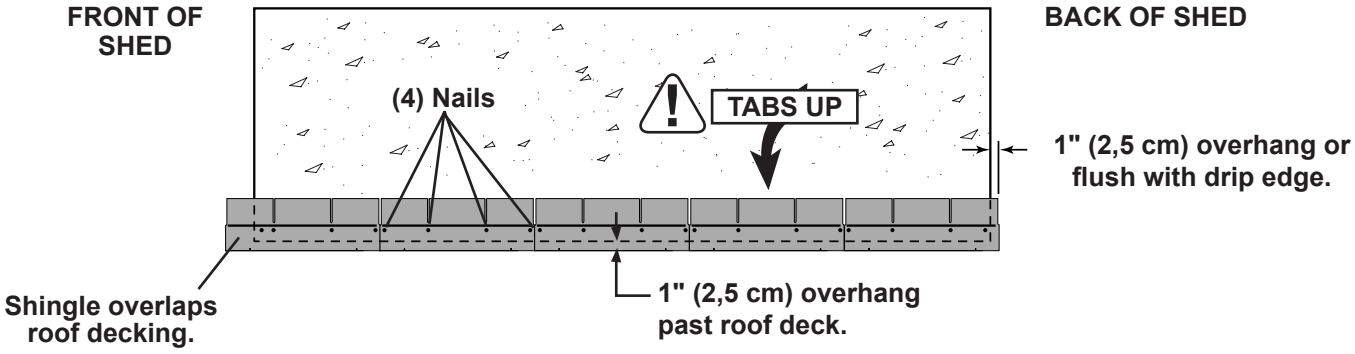

2 Beginning at front of shed, install first row of shingles with notch at 1" past roof edge or flush with drip edge.

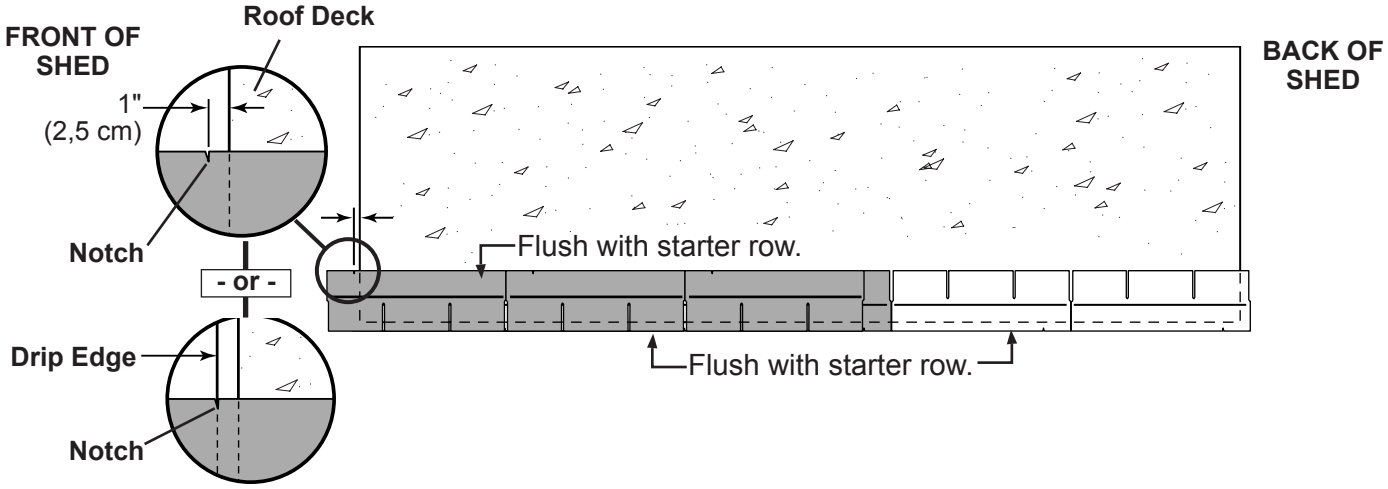

3 Install second row of shingles flush at top of first row's rain slots. Ensure 1" overhang or flush to drip edge at front, stagger each row.

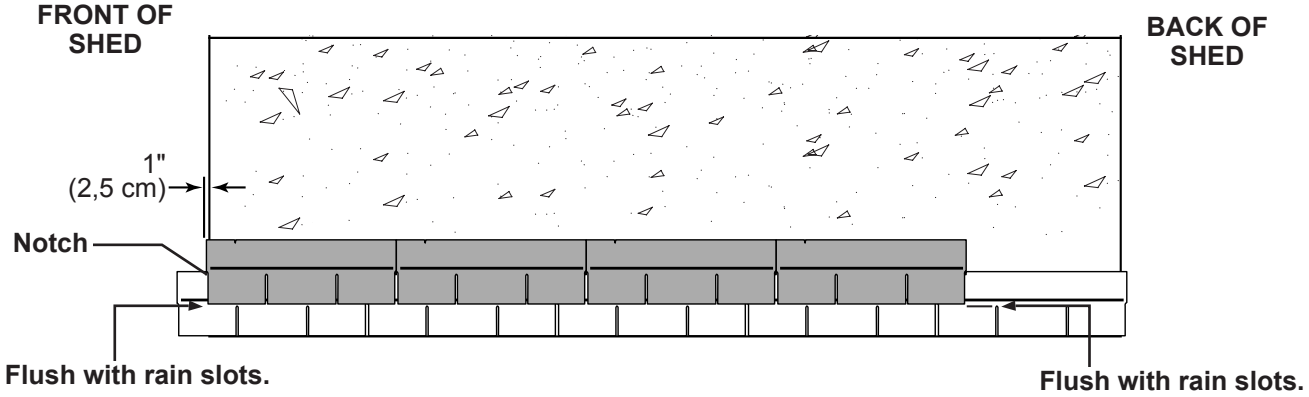

4 Continue installing rows of shingles by staggering at front.

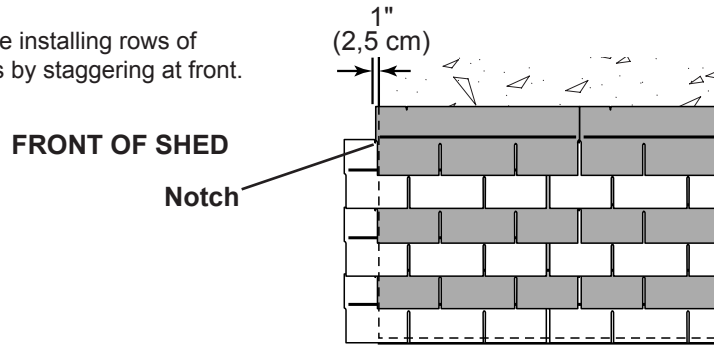

5 *Continue installing rows of shingles to the peak. At the peak make sure there is a maximum of 5" or less to the rain slot, as shown below. If shingles overlap at ridge cut to peak with a utility knife.*

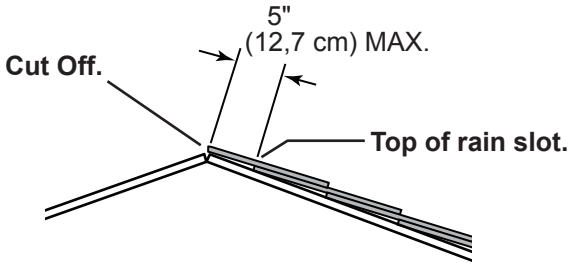

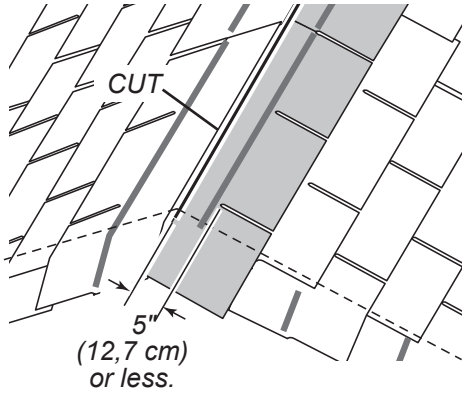

⚠ **• If more than 5" to rain slot you must install another row of shingles.**

6 *Repeat steps 1 - 5 to shingle the opposite side of your roof. Trim shingles at ridge.*

7 *Once both sides are shingled you need to trim ends. Strike a chalk line 1" from edge.*

8 Using your shingle hooked blade carefully cut shingles along chalk line.

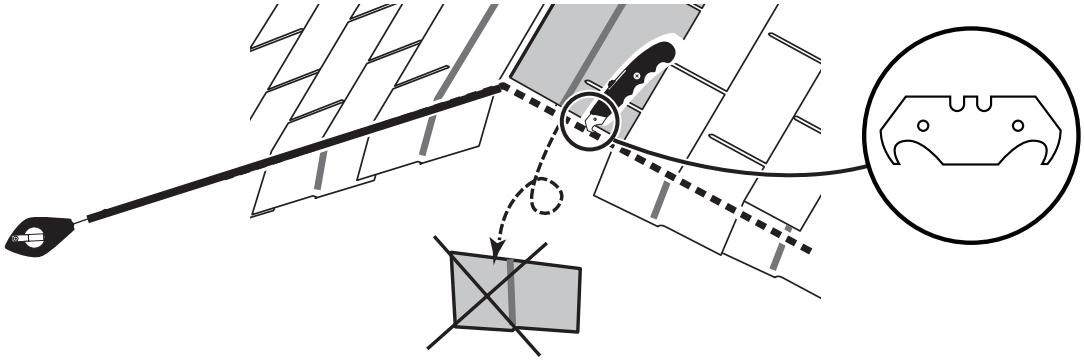

FINISH

You have finished shingling your roof. Proceed to capping the ridge.

SHINGLES - RIDGE CAP

• You will finish off the top of the roof with a ridge cap made from shingles.

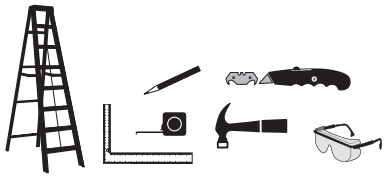

✓BEGIN

1 Cut shingles into THREE pieces. **Hint:** Use cut-off pieces first.

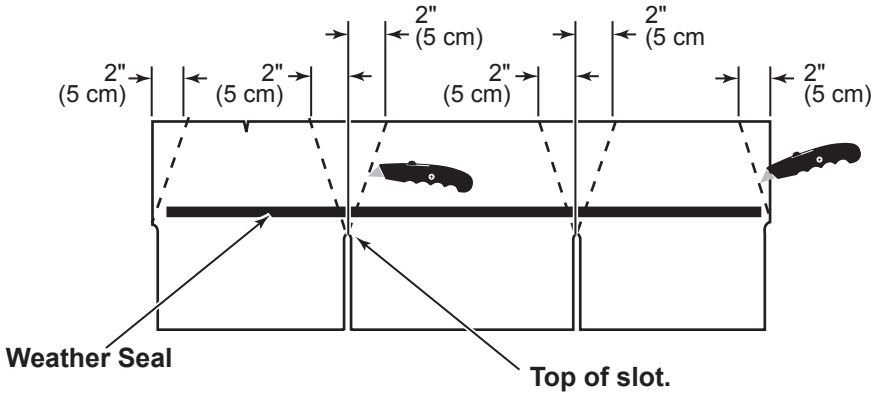

Score shingle, then snap-off angled cut.

Note: • You will need about 63 - 65 cut pieces.

2 Install first ridge cap flush to shingles at front, as shown.

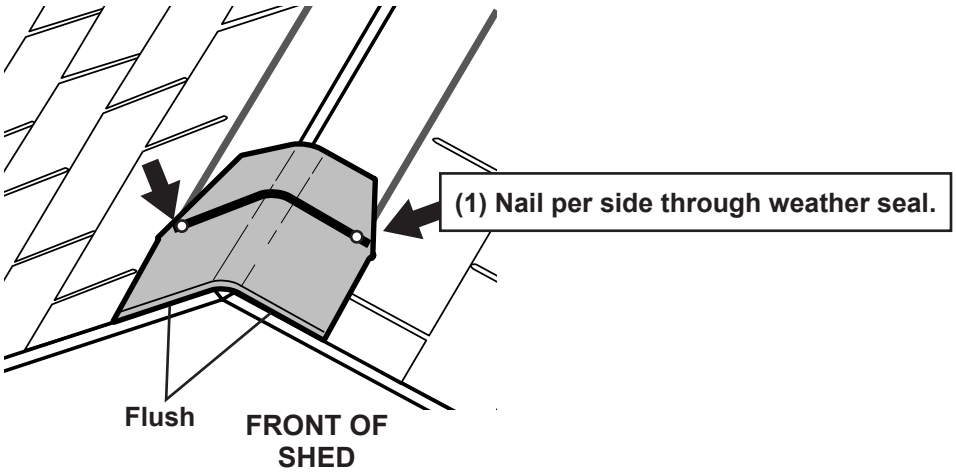

3 Install second ridge cap 5" back, as shown.

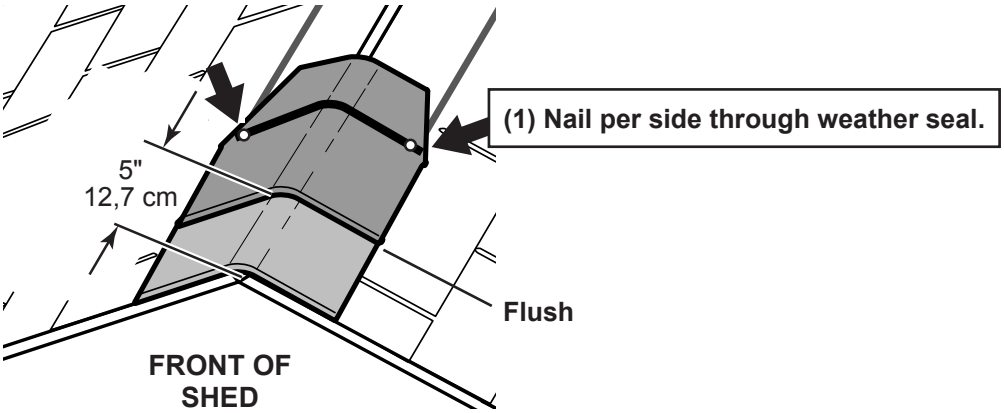

SHINGLES - RIDGE CAP
continued...

4 Continue installing ridge cap to back of roof.

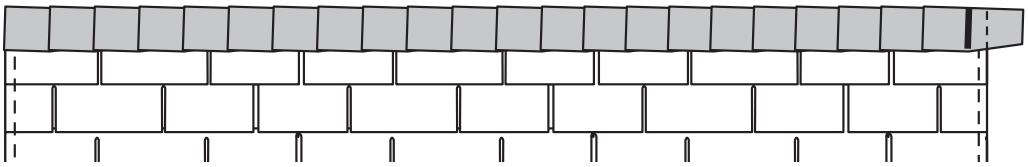

5 Make sure there is 4" between the shingle-color and edge of shingles.

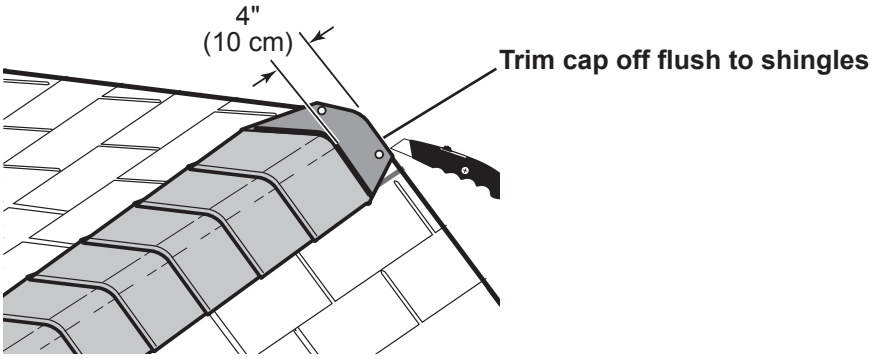

6 When you have 4" minimum of shingle color cut one piece to cap your roof.

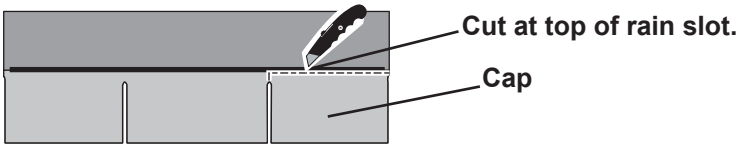

7 Install flush to shingles.

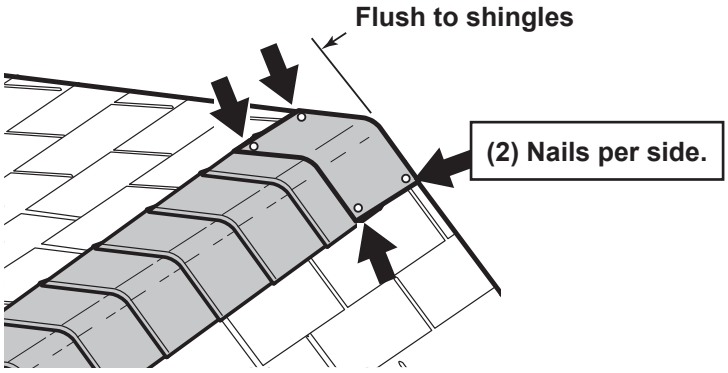

FINISH

You have finished your ridge cap.

16836-B 12' x 24' Order Form

CATEGORY	PART DESCRIPTION	PART SIZE	PART ITEM #	BUILDING QTY.	PART ID
2 X 4	Overhang Blocking & Gable Framing	2 X 4 X 4-7/8" OVERHANG BLOCK	O 04140000000	12	CLA
	Front & Back Plate "A" / Doubler "A"	2 X 4 X 92 1/2"	O 92080000000	6	TJ
	Front & Back Plate "B" / Doubler "B"	2 X 4 X 44 1/2" PLATE	O 44080000000	6	STL
	Rake Framing	2 X 4 X 88-11/16" 26.5* O/E R	O 88112605000	8	KFB
	Rafters	2 X 4 X 88-11/16" 26.5* O/E BIRD	O 8811260500N	26	DNB
	Wall Studs	2 X 4 X 78 1/2"	O 78080000000	40	AI
	Door Studs / Sidewall Doubler	2 X 4 X 68-1/2"	O 68080000000	2	YFA
	Over Door Crippler	2 X 4 X 6 1/2" OVER DOOR	O 06080000000	5	UY
	Side Wall Btm Plate "A" / Doubler "A"	LUM SPF 2X4X96 #2&BTR	12306	10	TP
	Side Wall Btm Plat "A" / Doubler "B"	2X4X48" DOUBLER/ PLATE/ CRATE	O 48000000000	10	SP
	Side Wall Top Plate	*LUM SPF 2X4X72 #2&BTR	O 72000000000	4	TM
	Door Header	2 X 4 X 67"	O 67000000000	2	AM
	Gable Connector	2 X 4 X 23-1/4" @ 26.5* GABLE	O 23042605000	4	UV
1 X 3 PINE	Gauge Block	1 X 3 X 5" PINE FILLER	U 05000000000	1	GAA
1 X 4 PINE	Collar Tie	1 X 4 X 84" PINE TRIM	T 84000000000	5	WTA
7/16 OSB	Roof Panel "A"	OSB 7/16" x 4' x 8'	11110	4	---
	Roof Panel "B"	7/16" OSB 8-1/2" X 88-5/8" ROOF PANEL	C 88100808000	4	---
	Roof Panel "C"	7/16" X 40-5/8" X 96" ROOF PANEL	C 96004010000	4	---
	Roof Panel "D"	7/16" OSB 47 7/8" X 48" ROOF	C 48004714000	4	---
	Roof Panel "E"	7/16" OSB 40-5/8" x 48" ROOF	C 48004010000	4	---
	Door Header Filler	7/16" OSB 3 1/4" X 66 3/4" HEADER	C 66120304000	1	---
GUSSETS	Gusset	EZ 8" 6" X 24" GUSSET 28*-	J 24000600280	24	---
NO GROOVE SIDING	Wall panel at Door -RIGHT	3/8"NG RT PANEL@DOOR (33445,	K 84004800510	1	---
	Wall panel at Door -LEFT	3/8"NG LT PANEL@DOOR (33445,	K 84004800520	1	---
	Front Sidewall Panel	NG 23 7/8" X 84" WALL PANEL	K 84002314000	2	---
	Backwall & Sidewall Panel	SIDING NGSE 3/8X4'X7'	11507	15	---
	Center Gable Panel w/ Hole	3/8" NG 28" X 39 11/16" X 48"	K 4800391104V	2	---
	Gable Panels - RIGHT	*3/8" NG x 27-3/4" x 48" RT GABLE	K 48002712100	2	---
	Gable Panels - LEFT	*3/8" NG x 27-3/4" x 48" LT GABLE	K 48002712200	2	---
	Gable Soffit	3/8" NG X 7-7/8" X 86-3/4"	K 86120714000	4	---
	Eave Soffit	3/8" NGx5-7/8" X 73"	K 73000514000	4	---
	Eave Fascia	3/8" NGx4-3/4" X 80-7/8"	K 80140412000	4	---
	Gable Trim-RIGHT	3/8" NG 4-3/4" X 89-1/4" 26.5	K 89040412100	2	---
	Gable Trim-LEFT	3/8" NG 4-3/4" X 89-1/4" 26.5	K 89040412200	2	---
	Eave Soffit	3/8" NG 5-7/8" X 48" SOFFIT	K 48000514004	2	---
	Eave Fascia	3/8" NG 4-3/4" X 48" FASCIA	K 48000412004	2	---
	Eave Soffit	3/8" NG 5-7/8" X 96" SOFFIT	K 96000514000	2	---
	Eave Fascia	3/8" NG 4-3/4" X 96" FASCIA	K 96000412000	2	---
	Rafter Spacers	3/8" NG X 3-1/4" X 5-7/8"	K 05140304000	4	---
	Corner Trim Eave Side	3/8"NGx1-3/4"x 81-7/8" TRIM	K 81140112000	4	---
	Corner Trim Gable Side	3/8"NGx1-3/4"x 82-1/2" TRIM	K 82080112000	4	---
19/32 X 3 SMART TRIM	Horizontal Door Rails	19/32 TST 2 1/2" X 26 5/8"	UT26100208000	4	AH
	Vertical Door Trim	19/32 TST 2 1/2" X 44-1/8"	UT44020208000	2	DKA
	Door Trim Hinge/Over Door	19/32 TST 2 1/2" X 72" TRIM	UT72000208000	1	ZJ
PURCHASED COMPONENTS	Door Stiffener	LSL 1-1/4 X 2-1/4 X 69 PET	12715	2	OO
	Vents- Exterior White	VENT 8X10, APL# CV12X18W-PE, A	15021	2	---
	Threshold	THRESHOLD 7/8" X 1-1/2" X 63-7/8	15420	1	---
	Black "T" &"D" Handle	HANDLE - T 4" SHAFT & "D"	15375	1	---
	Faux Hinges (Bag of 2)	HINGE (FAUX) w/ SCREWS (2 HING	15263	1	---
	Faux Hinges (Bag of 4)	HINGE (FAUX) w/ SCREWS (4 HING	15246	1	---
	Transoms For Doors	WINDOW 9 X 27 TRANSOM (SINGLE	15235	2	---
	Hardware Kit	H/K (33707) 10x16 Bellingham	15734	3	---
	Hardware Kit	H/K (33026) 10x12 GABLE	15783	1	---
	Spring Bolt	SPRING BOLT, 1.63 TRAVEL, W/SCREWS	15129	2	---
PACKAGING	Instructions		16836-B	1	---
	30095-R				
Right Door Assembly	Door Panel	3/8" NGx31-3/8" x 71-1/2"	K 7108310600R	1	---
	Right Hinge Assembly	HINGE RIGHT (RED) 19/32x3 THIN TRIM	30121-TT	1	---
	Vertical Door Stiles	19/32 TST 2 1/2" X 71 5/8"	UT71100208000	2	GY
	Horizontal Door Rails	19/32 TST 2 1/2" X 26 5/8"	UT26100208000	2	AH
	30095-L				
Left Door Assembly	Door Panel	3/8" NGx31-3/8" x 71-1/2"	K 7108310600R	1	---
	Left Hinge Assembly	HINGE LEFT (GREEN) 19/32x3 THIN TRIM	30131-TT	1	---
	Vertical Door Stiles	19/32 TST 2 1/2" X 71 5/8"	UT71100208000	2	GY
	Horizontal Door Rails	19/32 TST 2 1/2" X 26 5/8"	UT26100208000	2	AH

LIMITED CONDITIONAL WARRANTY*

Backyard Storage Solutions, LLC warrants the following:

1. Every product is warranted from defects in workmanship and manufacturing for 1 year.
2. All accessories, hardware and metal components are warranted for 2 years.
3. All Oriented Strand Board (OSB) is warranted for 2 years
4. Siding and Trim is warranted for 10 years.
5. Solar Shed windows are warranted for 1 year.
6. Cedar lumber is warranted for 15 years.
7. Preserved Pine is warranted for 10 years.
8. Redwood is warranted for 10 years.

Backyard Storage Solutions, LLC will repair, replace or pay for the affected part. In no event shall Backyard Storage Solutions, LLC pay the cost of labor or installation or any other costs related thereto. All warranties are from date of purchase. If a cash refund is paid on an affected part, it will be prorated from the date of purchase.

CONDITIONS

The warranty is effective only when:

1. The unit has been erected in accordance with the assembly instructions.
2. The unit has been properly shingled and painted or stained and reasonably and regularly maintained thereafter.
3. The failure occurs when the unit is owned by the original purchaser.
4. Backyard Storage Solutions, LLC has received the warranty registration card within thirty (30) days of purchase and notification of the failure in writing within the warranty period specified above.
5. Backyard Storage Solutions, LLC has had reasonable opportunity during the sixty (60) days following receipt of notification to inspect and verify the failure prior to commencement of any repair work.

REQUIREMENTS

Storage Buildings

To validate your warranty, it is necessary to properly maintain your Backyard Storage Solutions, LLC unit; shingle the roof and paint or solid-colored stain the siding using quality, 100% acrylic latex exterior product with a minimum of two (2) coats within thirty (30) days of assembly; caulk above all doors and all horizontal and vertical trim boards; paint and seal all exposed edges, sides and faces of siding/trim and OSB siding to include all exterior walls and all sides and all edges of doors.

Gazebos & Pergolas

To validate your warranty, it is necessary to properly maintain your Backyard Storage Solutions, LLC unit. This includes treating all of the exposed cedar and pine surfaces on your gazebo or pergola structure with an exterior grade wood preservative, an exterior oil-based semi-transparent stain, an acrylic latex exterior paint or an acrylic latex solid color exterior stain within 30 days of assembly and as needed thereafter to maintain your warranty.

Keep vegetation trimmed away from building and make sure siding panels and trim do not come in contact with masonry or cement. The minimum ground clearance for siding must be one half inch (½ inch) from concrete slab or two and one half inches (2 ½") from the ground when building is erected or constructed on a treated wood floor kit. Water from sprinklers must be kept off unit. In no event will Backyard Storage Solutions, LLC be responsible for any indirect, incidental, consequential or special damages nor for failure(s) that are caused by events, acts or omissions beyond our control including, but not limited to, misuse or improper assembly, improper maintenance (which eventually leads to rot or decay) and acts of God. Backyard Storage Solutions, LLC will not be held responsible for any labor costs incurred to construct your unit.
This warranty gives you certain specific rights that vary from state to state.

CLAIM PROCEDURE

To make a claim under this warranty, you can either call 1-888-827-9056 or email: customerservice@backyardproducts.com.
Please have ready the information below when you call or include the information in your email:

1. The model and size of the product.
2. A list of the part(s) for which the claim is made.
3. Proof of purchase of the Backyard Storage Solutions, LLC item, as shown on the original invoice or receipt.
4. Run code: found on exterior product label or assembly instructions enclosed in the product package.

All other inquiries can be mailed to:

Backyard Storage Solutions, LLC
Attn: Customer Service
1000 Ternes
Monroe, MI 48162

***WARRANTY TERMS MAY VARY OUTSIDE THE U.S.A.**
IMPORTANT: This is your warranty certificate.