Instruction Manual

Ceiling Light Fixture

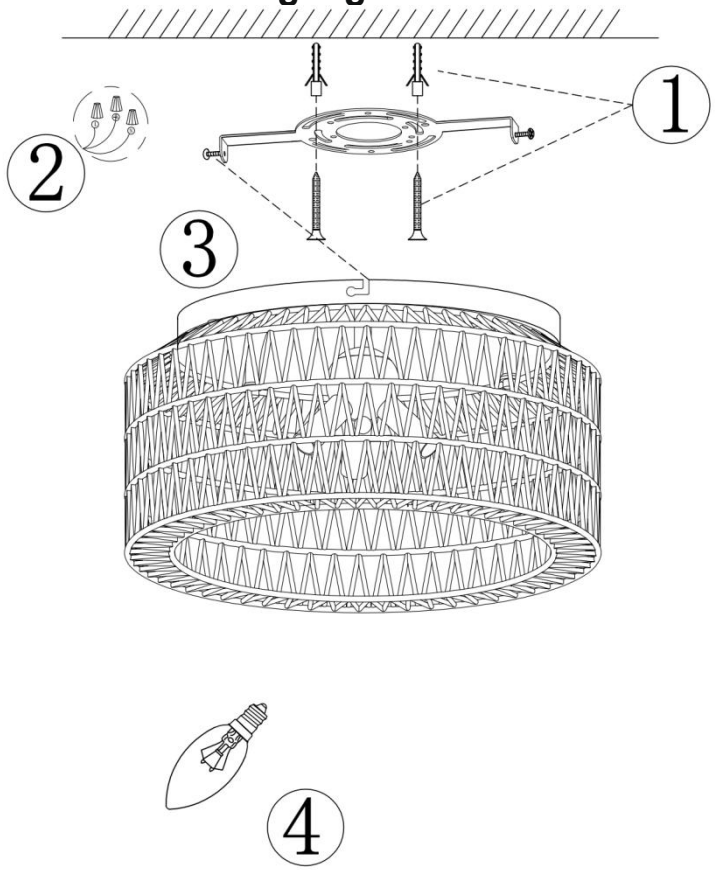

INFORMATION AND PACKAGE

Specification	
Voltage	110-120V
Bulb Socket	E26
Wattage	40W
Bulb Type	Incandescent lamp, halogen lamp, LED bulb
Warranty	2 Years

Package List	
Lamp Body	1
Instructions and accessories	1

A LETTER TO MY PRECIOUS CUSTOMER

Dear Customer,

Thanks for choosing light! If you have any issue when you receive it, please contact us directly.

- Customer Support Team

INSTALLATION STEPS

1. Use the screws to mount the bracket on the junction box. (If you don't have a junction box, you can drill two holes in the wall and put in two expansion pellets, and finally fix the bracket with self-tapping screws)

2. Connect the "L" wire to your "live" wire through the orange terminal caps and the "N" wire to your "neutral" wire, the copper wire needs to be wrapped around the green screw.

3. Align the two notches on the edge of the ceiling tray with the screws on the bracket and fix them by rotating.

4.Screw on the light bulb

QUESTION & ANSWER

Q: After powering on, my lamp doesn't work. What should I do?

A: Please check whether the lamp is really powered on and the switch is on.
Please make sure the light bulb you are using is the good one.
Please check whether the copper pieces inside the bulb socket contacts well with your bulb.
None of these 3 steps? Just feel free to contact us for a replacement.