Cardale™ | K-REC30194

9" assist bar

Features

- 9" (229 mm) bar
- 7/8" (22 mm) bar diameter
- Contemporary styling matches any decor
- Provides 300 lb (136 kg) of support
- Coordinates with other products in the Cardale collection



Available Colors/Finishes

Color tiles intended for reference only.

	CP	Polished Chrome
	2BZ	Oil-Rubbed Bronze
	BL	Matte Black
	2MB	Vibrant Brushed Moderne Brass

1-800-4KOHLER (1-800-456-4537)
Kohler Co. reserves the right to make revisions without notice to product specifications.
For the most current specification sheet, go to www.kohler.com USA or www.kohler.ca Canada.
3-27-2026 14:19 - US-CA

Codes/Standards

None Applicable

Material

- Premium metal construction for durability and reliability
- KOHLER finishes resist corrosion and tarnishing

Recommended Products/Accessories

K-23723 Faucet cleaner

Warranty

See website for detailed warranty information.

KOHLER® Faucet Lifetime Limited Warranty

1-800-4KOHLER (1-800-456-4537)
Kohler Co. reserves the right to make revisions without notice to product specifications.
For the most current specification sheet, go to www.kohler.com USA or www.kohler.ca Canada.
3-27-2026 14:19 - US-CA

THE BOLD LOOK OF KOHLER.

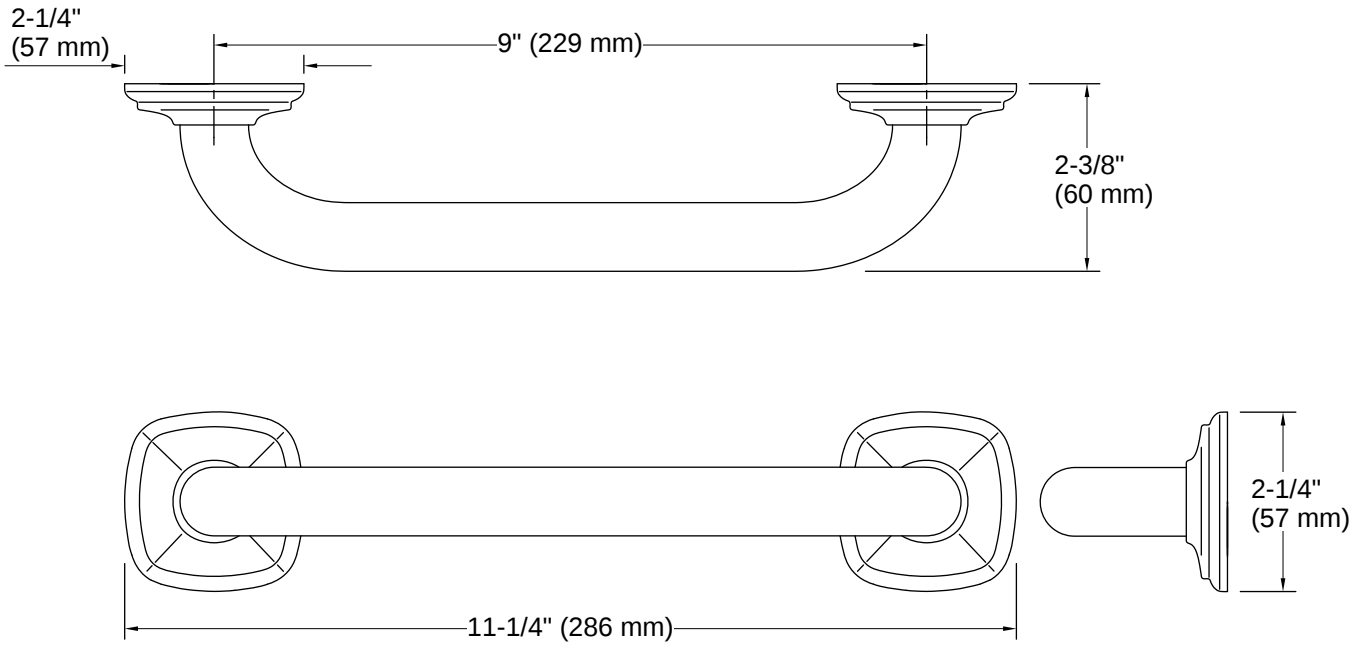

Installation Notes

Install this product according to the installation instructions.

1-800-4KOHLER (1-800-456-4537)
Kohler Co. reserves the right to make revisions without notice to product specifications.
For the most current specification sheet, go to www.kohler.com USA or www.kohler.ca Canada.
3-27-2026 14:19 - US-CA

THE BOLD LOOK OF KOHLER.