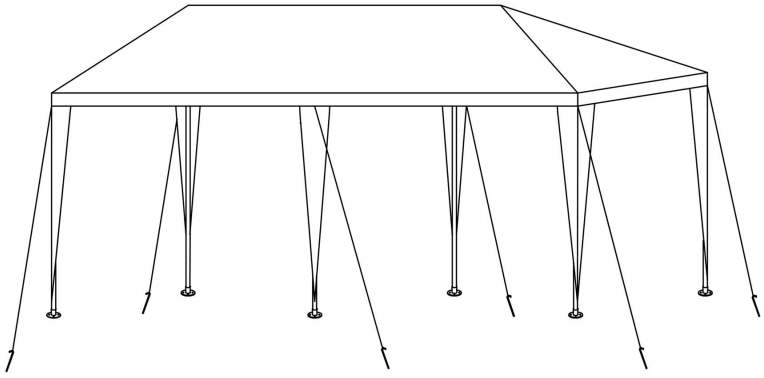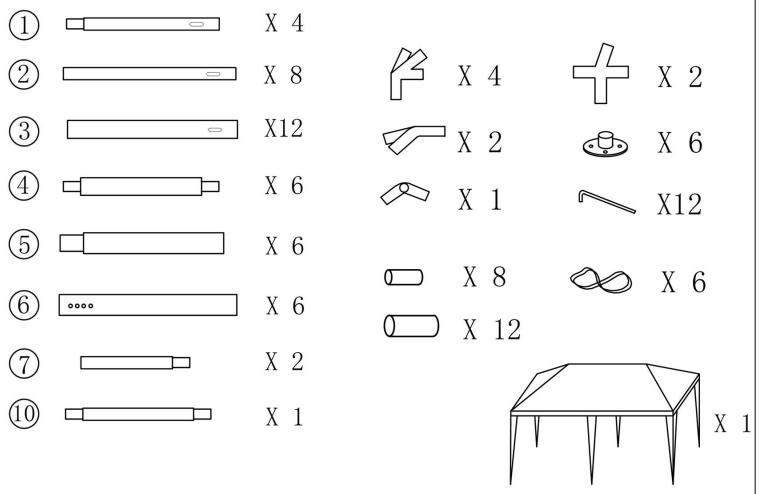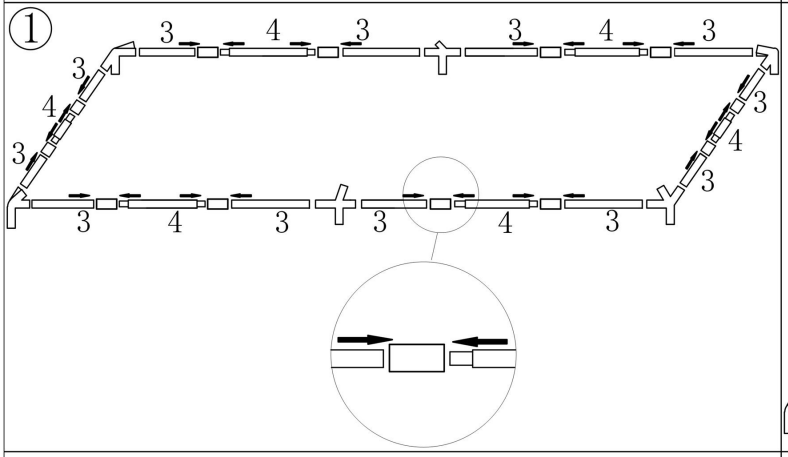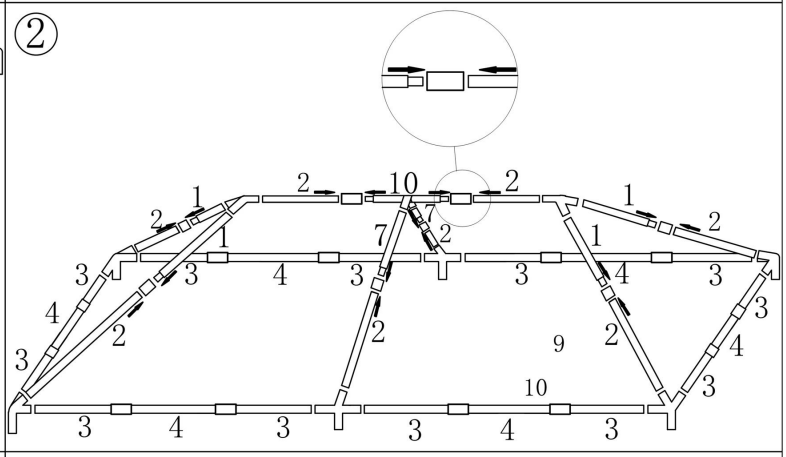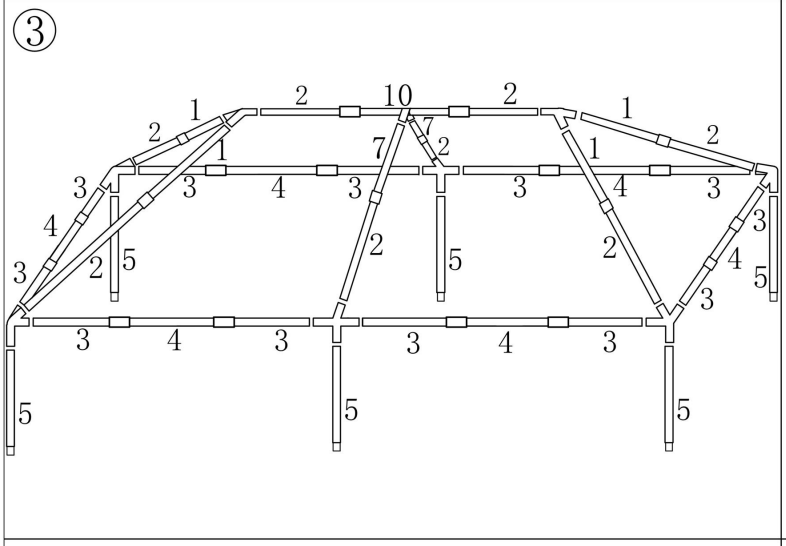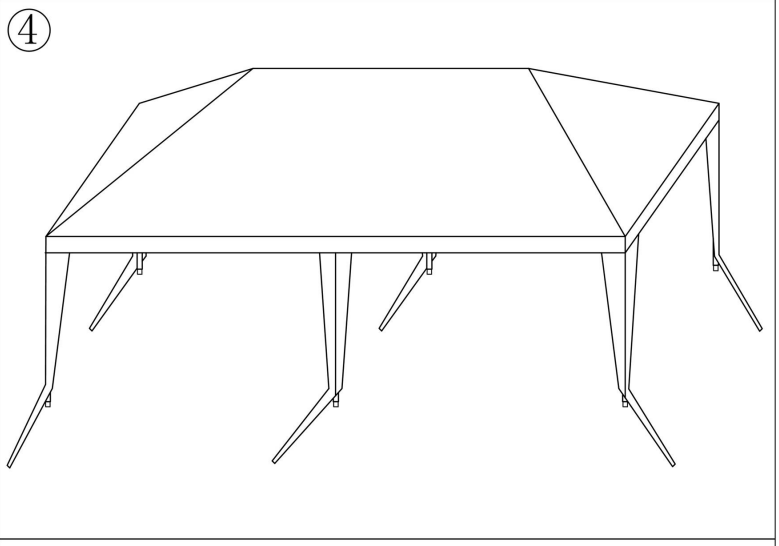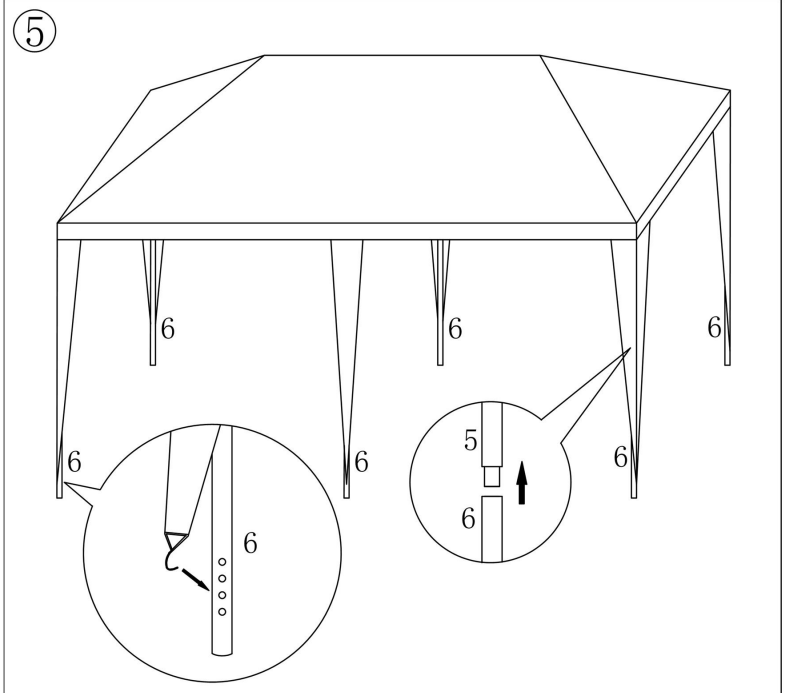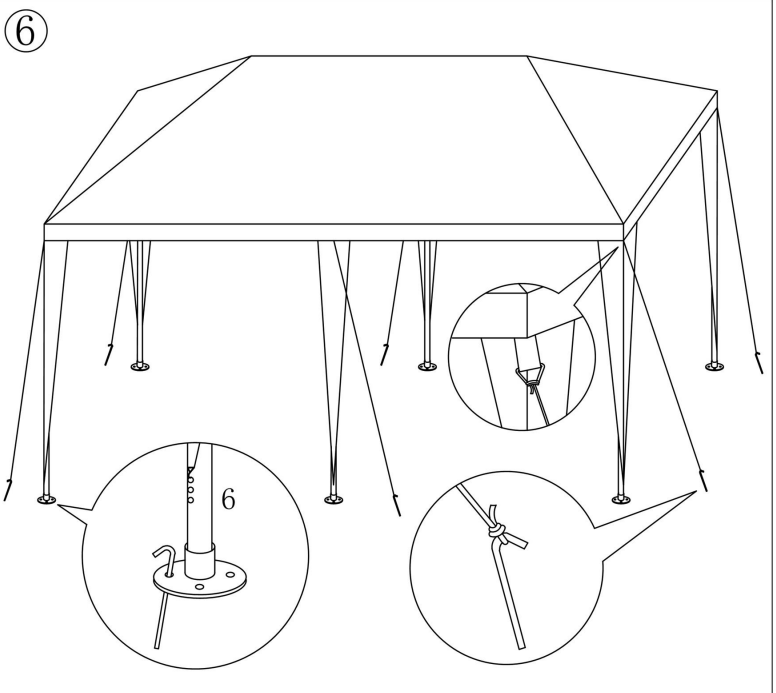10X20' INSTRUCTION