2.8 inch / 70 mm
1.6 inch / 40 mm
11.2 inch / 285 mm

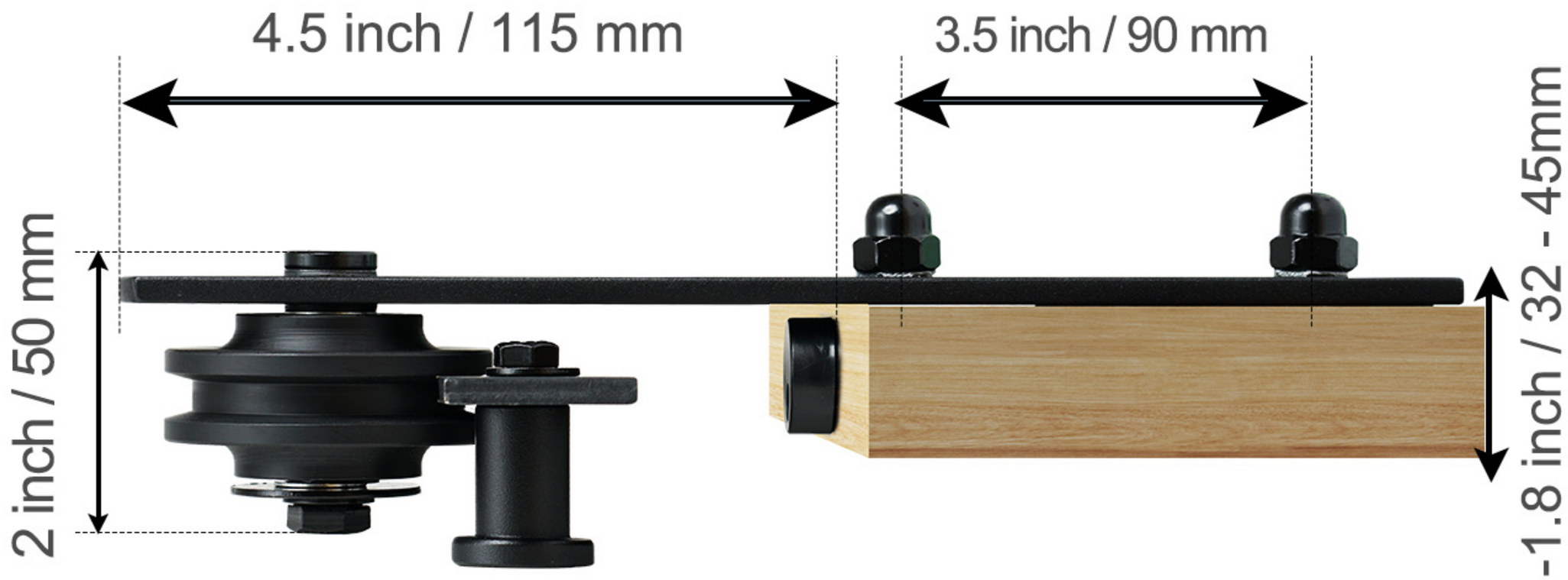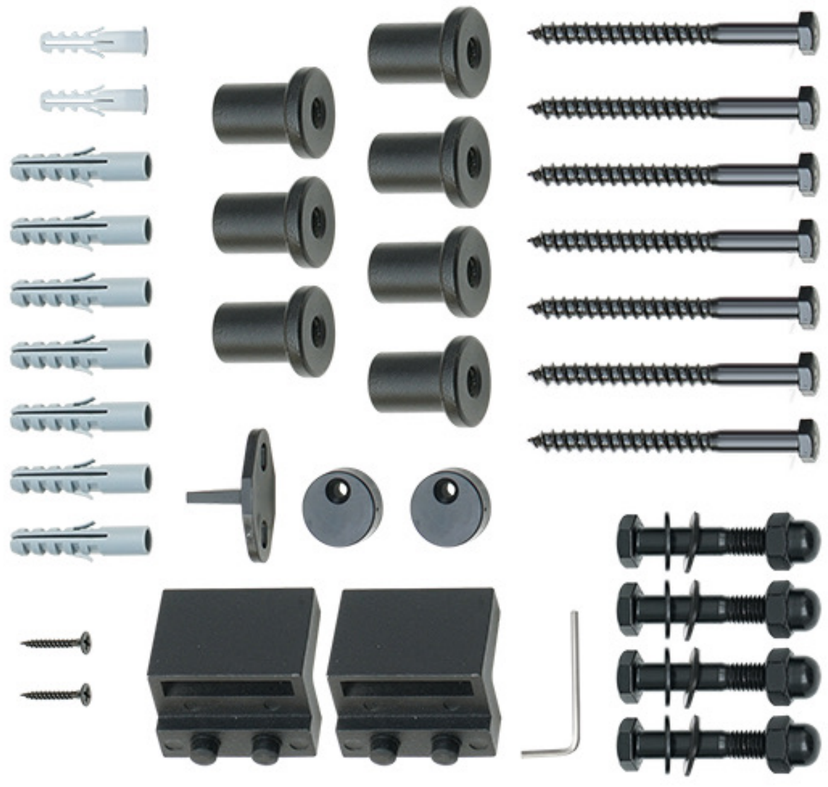
4.5 inch / 115 mm
3.5 inch / 90 mm
2 inch / 50 mm
1.3 -1.8 inch / 32 - 45mm