LOS FLEXI

LFE81-E Smart Toilet

FEATURES

LFE81-E



- Compact One-Piece Intelligent Toilet
- Built-in Water Tank
- Elongated Bowl
- 16.7" Seat Height
- Fully Skirted Trapway
- Auto Open/Close Lid
- Auto Off-Seat Flush
- 4-Level Customizable Settings
- Heated Soft-Close Seat
- Self-Cleaning Nozzle
- Siphonic Jet Flushing
- LED Display Screen
- Battery Box for Emergency Flush
- Remote Control Included
- Installation Kit Included

PRODUCT VIEWS



Top View



Side View



Front View



Back View

cs@losflexi.com

The above product images and drawings are not to scale and are for demonstration purposes only. Los Flexi reserves the right to make revisions without notice to product specifications. For the most current specifications, please go to www.losflexi.com or click on the product image on the first page.

LOS FLEXI

SPECIFICATIONS

Flush Type	Jet Siphon	**Model**	LFE81-E
Installation Type	Floor Mounted	**Bowl Shape**	Elongated
Dimensions	23 3/8" L × 15 3/16 " W × 18 1/4"H	**Material**	Ceramic
Waterproof Grade	IPX4	**Net Weight**	86 LB
Water Pressure	Adjustable	**Seat Height**	16 11/16"
Water Temperature	Room Temp/93/99/104°F	**Rough-In**	12"
Air Dry Temperature	Room Temp/102/117/131°F	**Water Usage**	0.8/1.28 GPF
Seat Temperature	Room Temp/93/99/104°F	**Rated Power**	750W
Massage Function	Yes	**Rated Voltage**	110V/60Hz
Side Panel Control	Yes	**Wire Length**	5 Feet
Remote Control	Yes	**Eco Mode Draw**	30W
Power Consumption	Min: 2W / Max: 1300W	**Hip Wash**	Yes
Remote Battery Type	AAA Battery ×2 (not included)	**Female Wash**	Yes
Backup Battery Type	AA Battery ×10 (not included)	**Foot Sensor**	Yes
Warranty	1-Year Limited Warranty	**Night Light**	Yes

STANDARDS

Uniform Plumbing Code Certified

MAP Premium Certified

ETL Certified

cs@losflexi.com

The above product images and drawings are not to scale and are for demonstration purposes only. Los Flexi reserves the right to make revisions without notice to product specifications. For the most current specifications, please go to www.losflexi.com or click on the product image on the first page.

LOS FLEXI

DIMENSIONS

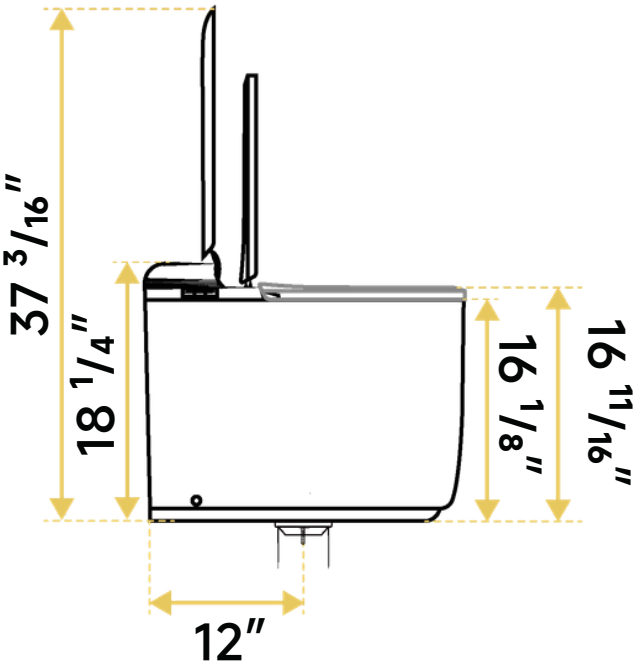

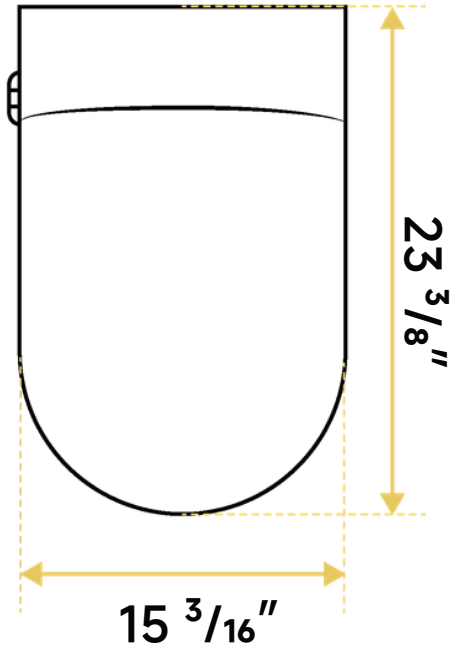

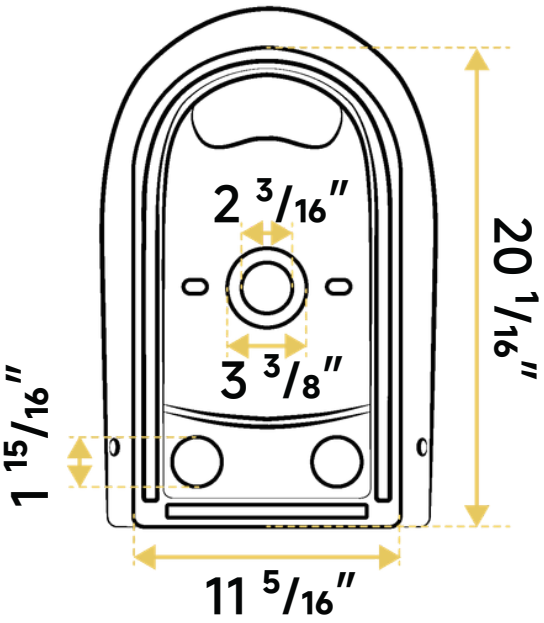

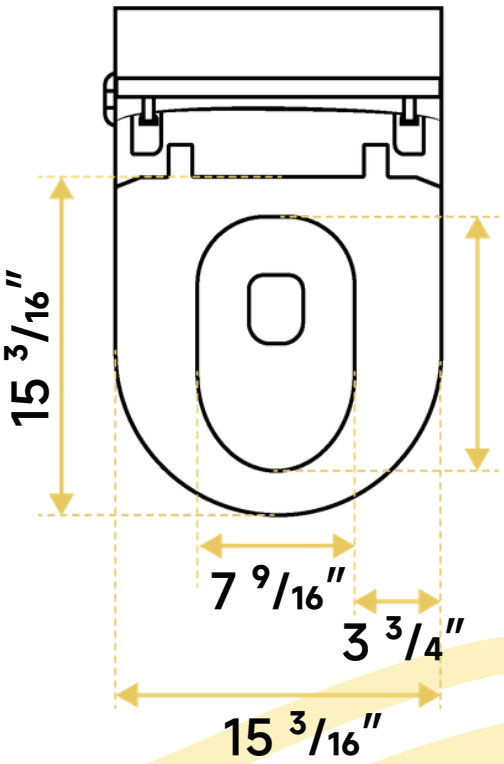

cs@losflexi.com

The above product images and drawings are not to scale and are for demonstration purposes only. Los Flexi reserves the right to make revisions without notice to product specifications. For the most current specifications, please go to www.losflexi.com or click on the product image on the first page.

LOS FLEXI

PACKAGE INCLUDES



Smart Toilet



Remote Control
(Battery not included)



Backup Battery Box
(Battery not included)



T-Valve



Water Filter



Wax Seal



Flange & Bolts

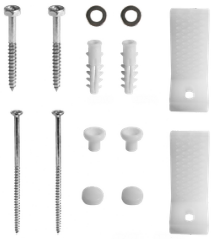

Floor Mounting Kit



ETL-listed Plug



User Manual



Insctruction Guide

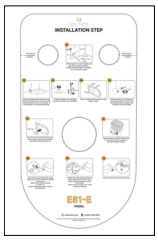

Installation Template

cs@losflexi.com

The above product images and drawings are not to scale and are for demonstration purposes only. Los Flexi reserves the right to make revisions without notice to product specifications. For the most current specifications, please go to www.losflexi.com or click on the product image on the first page.