TILE REDI® BASE'N BENCH® SHOWER KIT

WONDER DRAIN®
WITH REDI BENCH®

MODEL
WD3636C-RB36-KIT

(Not to scale)

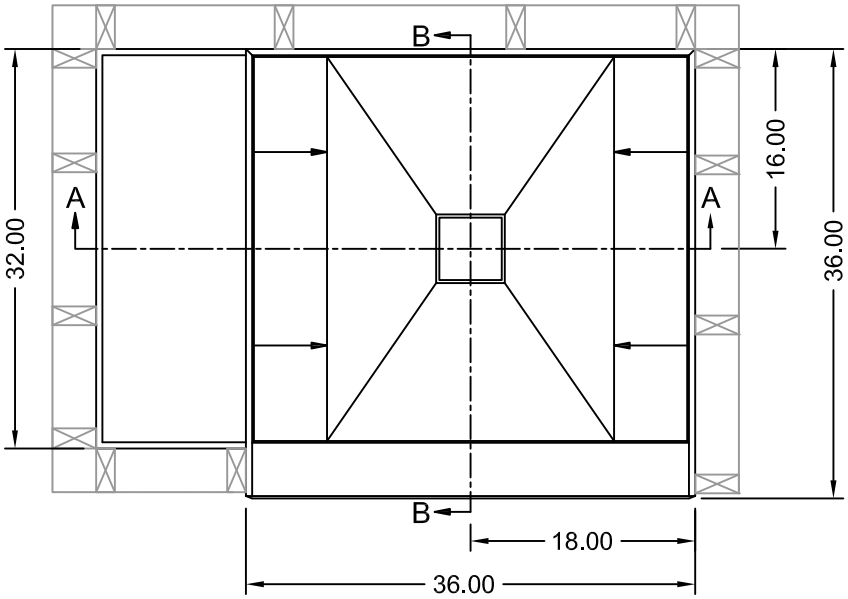

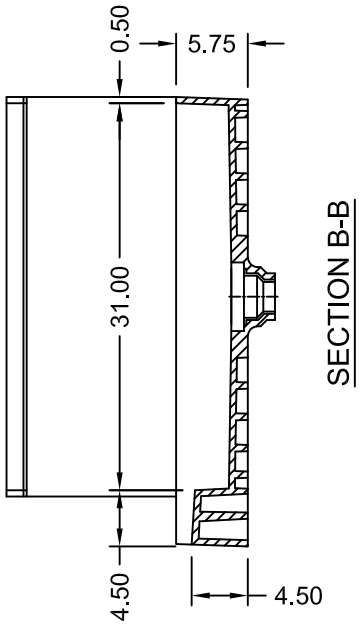

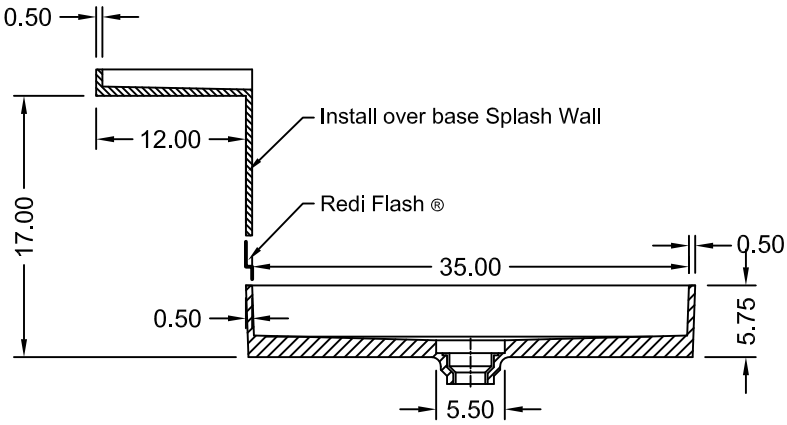

SECTION A-A

ANSI Z124.1-95
ANSI Z124.2-95
ICC/ANSI A117.1.98
ASTM F462-79
B45.0-02
B45.5-02

Toll Free 800.232.6156
Tel: 954.323.0125
Fax: 954.344.8064
techsupport@tileredi.com
www.tileredi.com

tile redi®
Perfection through Innovation

2017.06.12

©2017 TILE REDI USA, LLC