KOHLER®

# Underscore® Oval

6' Bath

**K-5718-VB**

## Features

- VibrAcoustic calms and soothes with sound vibration technology.
- Six concealed speakers send sound waves through the water to gently massage the body.
- Six original instrumental compositions offer different levels of relaxation.
- Syncs with devices enabled with BLUETOOTH® wireless technology including smartphones, MP3 players, tablets, and laptops located up to 33 feet away.*
- Customize your experience with the high-resolution color touch screen.
- Fully adjustable volume above and below the water.
- Functions as a hydrotherapy bath when full of water and a stereo system when empty.
- Molded lumbar support offers extra comfort while bathing.
- Oval-shaped basin offers a graceful and spacious bathing experience.
- Slotted overflow allows for deep soaking.
- Includes 25 feet of wiring and amplifier.
- Requires K-7271 or K-7272 Clearflo slotted overflow bath drain (sold separately).
- Center drain.
- The BLUETOOTH® word mark and logos are registered trademarks owned by Bluetooth SIG, Inc. and any use of such marks by Kohler Co. is under license. Other trademarks and trade names are those of their respective owners.

## Material

- Acrylic

## Hydrotherapy

- VibrAcoustic

## Installation

- Drop-in or under-mount.
- Requires 110V electrical service.

## Additional Hydrotherapy Options

- Soaking Bath - 5717-0
- Soaking Bath + Bask heated surface - 5717-W1
- BubbleMassage air bath - 5718-G
- BubbleMassage air bath + chromatherapy - 5718-GCR
- BubbleMassage air bath + Bask heated surface + chromatherapy - 5718-GCW
- VibrAcoustic + BubbleMassage air bath - 5718-GVB
- VibrAcoustic + BubbleMassage air bath + Bask heated surface + chromatherapy - 5718-GVBCW
- BubbleMassage air bath + Bask heated surface - 5718-GW
- Whirlpool + heater - 5718-H2



## Codes/Standards

CSA B45.5/IAPMO Z124
ASTM E162
ASTM E662
UL 1795
CSA C22.2 No. 218.2
Greenguard UL 2818 - Gold

## KOHLER® Plastic Baths and Receptors Lifetime Limited Warranty

See website for detailed warranty information.

The BLUETOOTH® word mark and logos are registered trademarks owned by Bluetooth SIG, Inc. and any use of such marks by Kohler Co. is under license. Other trademarks and trade names are those of their respective owners.

## Available Colors/Finishes

*Color tiles intended for reference only.*

| Color | Code | Description |
|---|---|---|
| | 0 | White |
| | 96 | Biscuit |
| | 47 | Almond |
| | NY | Dune |
| | 95 | Ice™ Grey |
| | G9 | Sandbar |
| | K4 | Cashmere |
| | 58 | Thunder™ Grey |
| | 7 | Black Black™ |

# Underscore® Oval

6' Bath

**K-5718-VB**

No change in measurements if connected with drain illustrated. (K-7272)

Recommended Faucet Location

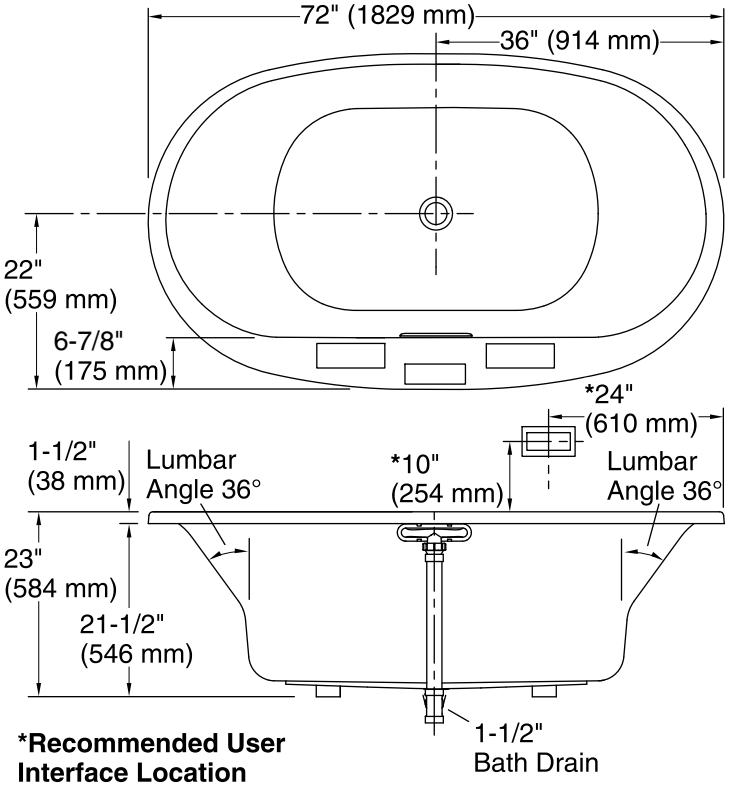


***Recommended User Interface Location**

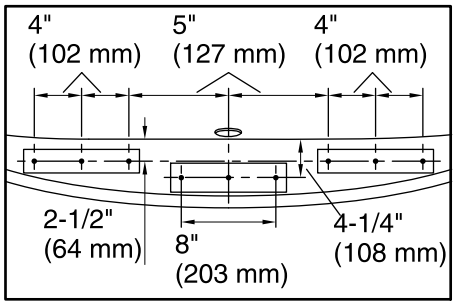


**Recommended Faucet Hole Location**

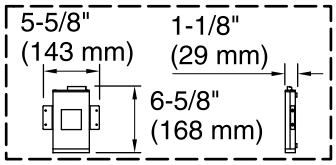


**Amplifier**

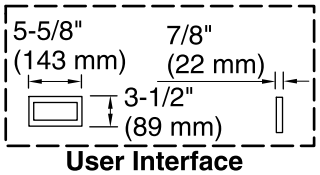


**User Interface**

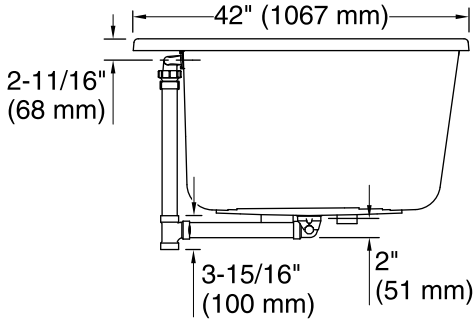


## Required Electrical Service

One circuit required, protected with Class A Ground-Fault Circuit-Interrupter (GFCI) or Residual Current Device (RCD).

| | |
|---|---|
| Amplifier: | 120 V, 15 A, 50/60 Hz |

## Technical Information

All product dimensions are nominal.

| | |
|---|---|
| Installation: | Drop-in, Under-mount |
| Drain location: | Center |
| Basin area, bottom: | 46-5/16" x 31-3/16" (1177 mm x 792 mm) |
| Basin area, top: | 63-7/16" x 34-1/4" (1611 mm x 869 mm) |
| Weight: | 110 lbs (49.9 kg) |
| Minimum floor load: | 52.4 lbs/ft² (255.8 kg/m²) |
| Water depth: | 18-5/8" (472 mm) |
| Water capacity: | 112.2 gal (424.7 L) |
| Template: | Drop-in, 1268440-7, required, included |
| Electrical component rating: | Amplifier: 120 V, 1.1 A, 50/60 Hz |
| Amplifier channels: | 2 at 15 W per channel<br>2 at 30 W per channel |
| Bluetooth® range: | 33 ft (0.8 m) |
| Bluetooth® version: | 3.0 |

## Notes

Measure your actual product for rough-in details.

Install this product according to the installation instructions.

The hot water supply should be 70% of the capacity of the bath or greater. Installations will vary.

If installing a rim-mount faucet, make sure there is no interference above or below the deck before drilling any holes.