ASSEMBLY INSTRUCTIONS

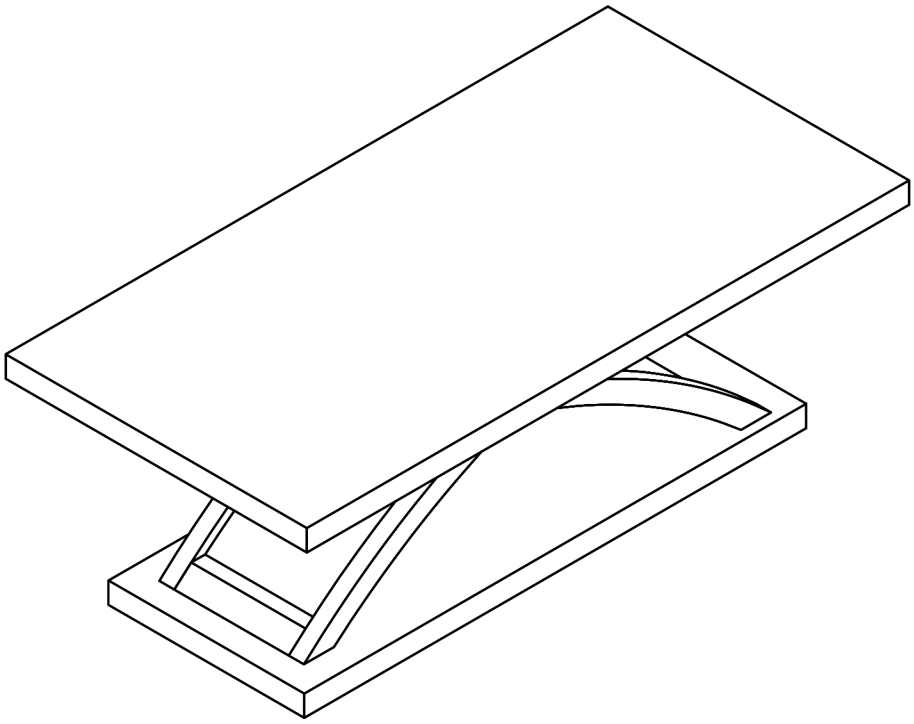

TOOLS REQUIRED

Allen Wrench

(Included)

Philips Screwdriver

(Not Included)

2 - Persons Recommended

ASSEMBLY RATING

EASY ⟶ DIFFICULT

The Assembly Rating is a 5-point system showing the level of effort needed to assemble a specific product.

VERSION # 19-08-01

CHECK BEFORE STARTING

- [ ] **Are you missing anything?**

  Double-check all parts, hardware and accessories listed on Page 6 are accounted for.

- [ ] **Should we send any replacements?**

  Are there any irregularities or flaws in the parts? We can send replacements!

- [ ] **Check out our Quick Tips!**

  We recommend reviewing the pre-assembly handouts. Even experts need a refresher now and then!

- [ ] **Prep Time!**

  Please review the assembly instructions and all diagrams prior to assembling. Arrange parts as recommended on Page 7 and group identical hardware together to make assembling easier.

PRE ASSEMBLY INTRODUCTION

We understand building ready-to-assemble furniture can be a challenging experience for some. To help avoid confusion, we have provided some helpful tips that may speed up the process.

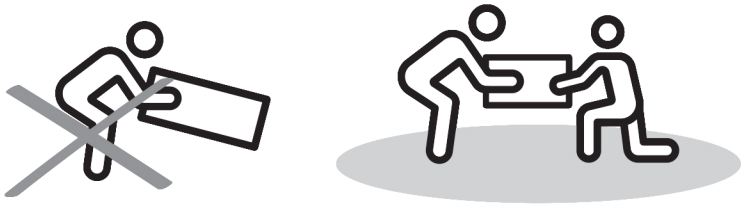

Teamwork

ALWAYS have at least two people to help with transporting and assembling the product to avoid potential injury and/or damage.

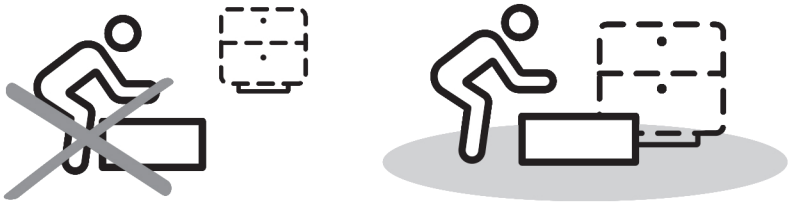

Suitable Location

Assembling near the area of the intended location is highly recommended.

Sufficient Space

Make sure you have enough space to move around during the assembly.

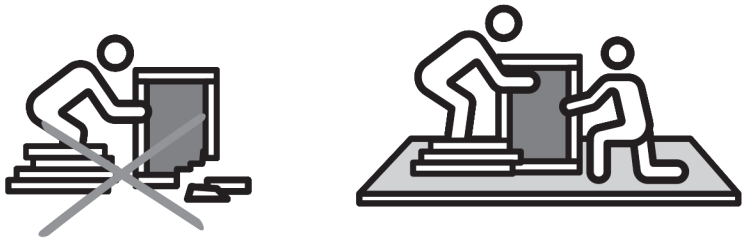

Avoid Scratches

Use cardboard, blankets or a carpeted area while assembling furniture to prevent scratches.

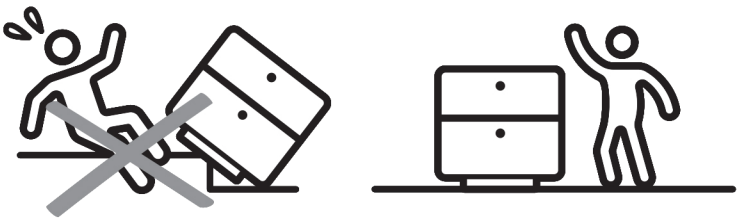

Flat Surface

Make sure the furniture rests on a flat and level surface with each leg evenly touching the floor.

ASSEMBLY AND CARE ADVICE

FAILURE TO FOLLOW THE GUIDELINES BELOW MAY RESULT IN INJURY AND/OR PROPERTY DAMAGE.

Position each part correctly and insert screws or bolts into their respective holes.

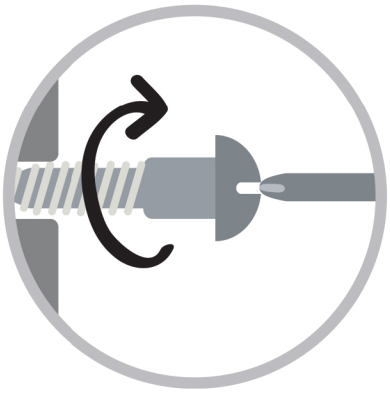

Turn clockwise to tighten and only tighten when step is completed or when instructed to do so.

Use the appropriate hand tools or power tools for assembly. Select steps, such as tightening screws and/or bolts, may require hand tools to avoid causing damage during assembly.

Save the instructions and store any supplied tools for later maintenance.

After two weeks, check and tighten any loose hardware and repeat again every six months thereafter.

IT IS THE USER'S RESPONSIBILITY TO MAINTAIN THE FURNITURE. THE HARDWARE MAY LOOSEN OVER TIME AND MAY CAUSE THE FURNITURE TO BE WOBBLY AND UNABLE TO SUPPORT ITS INTENDED WEIGHT CAPACITY. THIS MAY LEAD TO COLLAPSE AND MAY CAUSE SERIOUS INJURY.

COFFEE TABLE

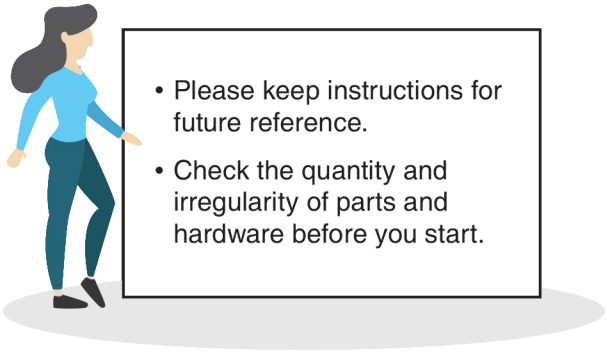

- Please keep instructions for future reference.
- Check the quantity and irregularity of parts and hardware before you start.

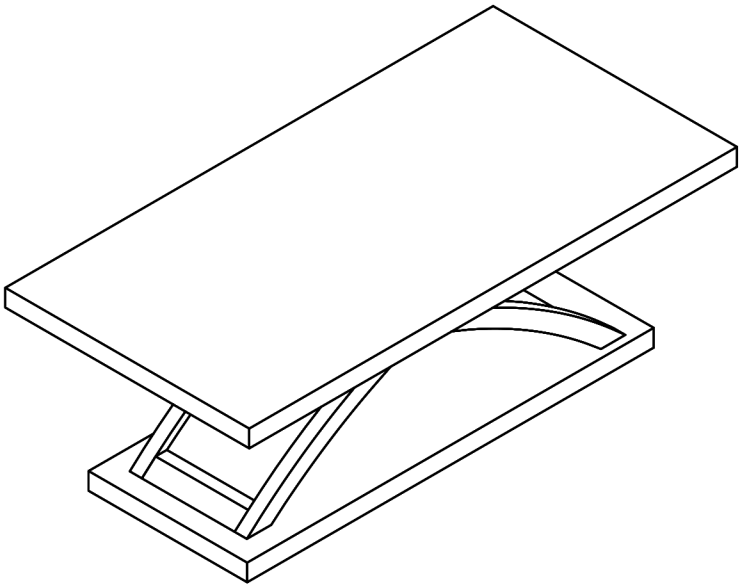

PARTS

#1 1pc

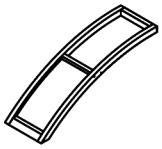

Inside cross leg

#2 1pc

Outside cross leg

#3 1pc

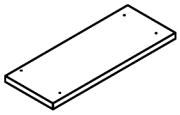

Base

#4 1pc

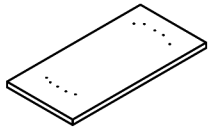

Top Panel

HARDWARE

#A 6pcs

Flat head screw Ø6x35

#B 4pcs

Sticker Ø20

#C 4pcs

Washer Ø17x2

#D 6pcs

Dowel Ø8x25

#E 4pcs

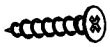

Self-Tapping Screw Ø4x50

#F 4pcs

Wood screw Ø7x58

#G 1pc

Glue

#H 4pcs

Foot Tack

ASSEMBLY INSTRUCTIONS

1

Part #1 x1pc
Part #2 x1pc
Hardware #A x4pcs
Hardware #B x8pcs

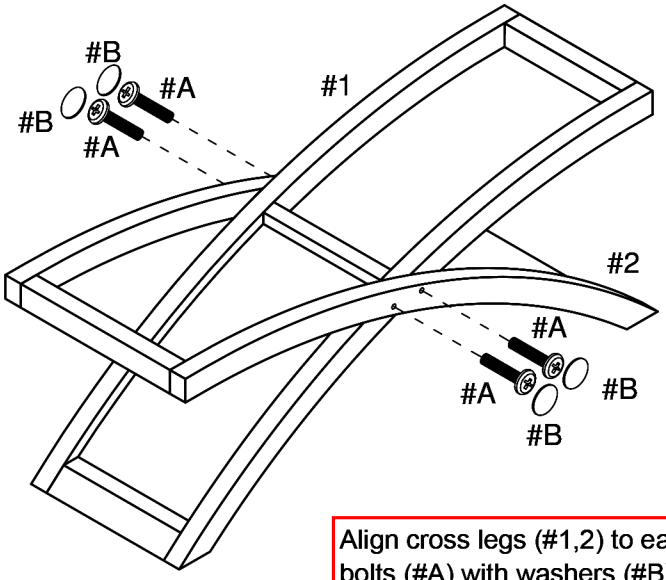

Align cross legs (#1,2) to each other, then secure by using bolts (#A) with washers (#B).

Tip: Place parts on the flat level surface to ease alignment and assemble.

2

Part #4 x1pc
Hardware #A x2pcs
Hardware #D x4pcs
Hardware #E x4pcs

Insert dowels (#D) to top (#4), then align cross legs to the top (#4). Secure by using bolts (#A) with screws (#E).

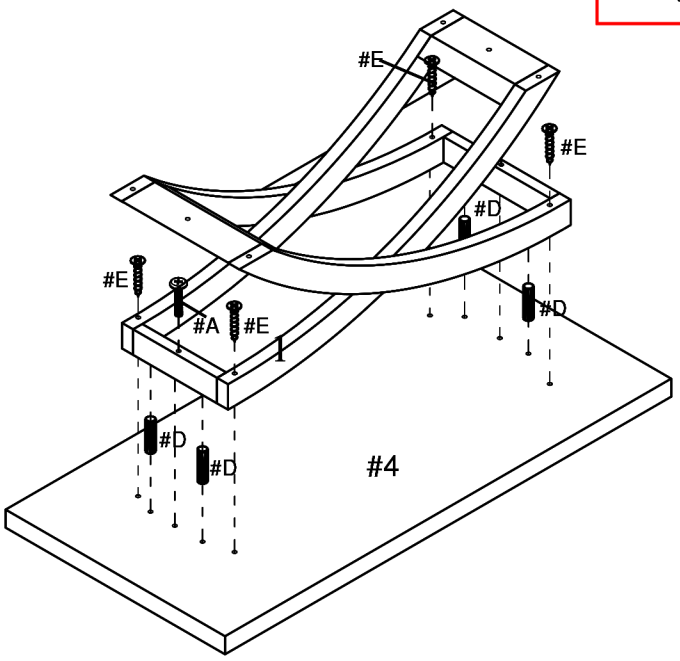

ASSEMBLY INSTRUCTIONS

3

Part #3 x1pc
Hardware #C x4pcs
Hardware #D x2pcs
Hardware #F x4pcs

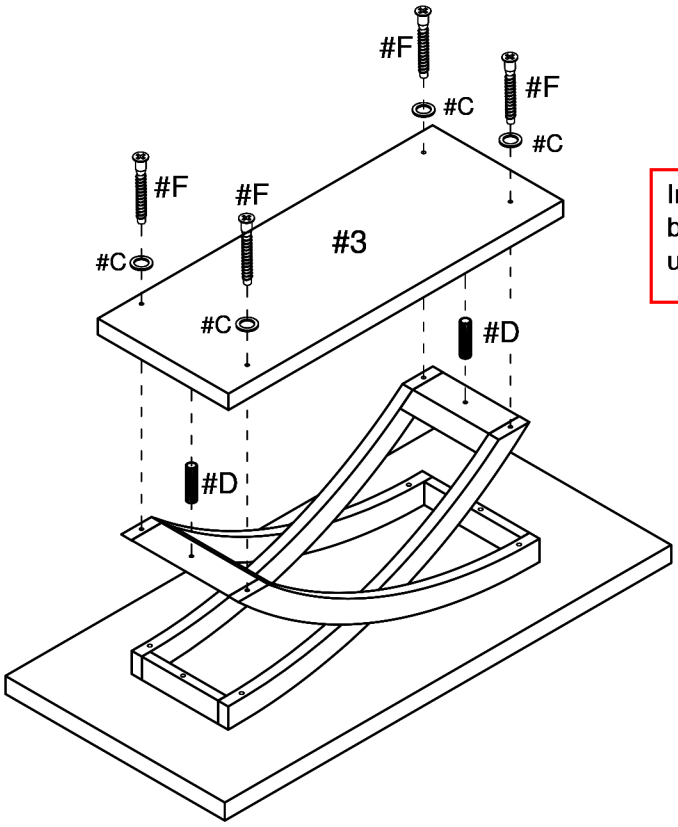

Insert dowels (#D) to cross legs. Align base (#3) to cross legs, then secure by using bolts (#F) with washers (#C).

4

Hardware #H x4pcs

Hammer the floor protectors (#H) to the base (#3).

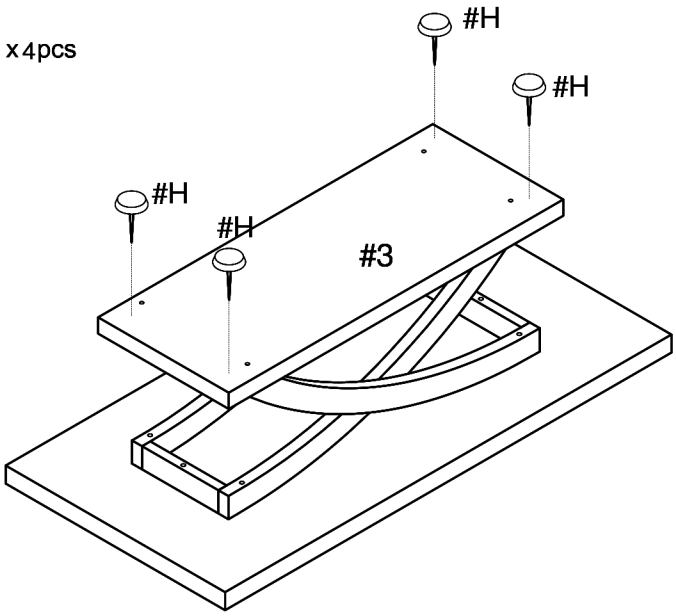

ASSEMBLY COMPLETED

Please ensure the furniture rests on an even and flat surface. If the product wobbles or feels loose, double-check all bolts and/or screws are properly tightened and secured.

Keep this handy!

Please retain this instruction manual and any order-related information for future reference.

Tip: Utilize the soft Styrofoam sheet from the packaging or any smooth soft blanket under the product to prevent scratches.