Please Note Before Use

1.Before the first time of driving, please read this user manual carefully about the cautions and safety specification. Or you can ask a director (coach) of driving experience for instruction.

2.The first charging shall be of 8-10 hrs. When the indicator of charger turns fromred to green, it means the battery is in full charged.

3.When all preparation works are done, in order to ensure safety and prevent from injury, please wear the safety helmet and protective gear.

Maintenance

1.If there are stains on the surface of the electric bicycle, wipe it with a soft cloth dipped in a small amount of water. If there are stubborn stains, use a toothbrush dipped in a small amount of toothpaste to scrub repeatedly, and then wipe it with a soft cloth dipped in water.

2.Do not use alcohol, kerosene, or other corrosive volatile solvent cleaning, otherwise it will damage the appearance and internal structure of the product.

3.Prohibit the use of pressure water gun spray rinse, and ensure that the bicycle is closed when cleaning, charging port rubber cap tightly, otherwise it may lead to serious consequences.

4.If you do not use the electric bicycle for a long time, please place the electric bicycle indoors in a dry and cool place, and try to avoid outdoor exposure to the sun. Otherwise, the appearance and tires of the electric bicycle will accelerate aging, and the life of the battery pack will be significantly reduced.

5.Do not use battery packs that are not original. Otherwise, risks may arise.

6.Do not open or Pierce the shell of the bicycle. Avoid direct contact of metal objects with the battery contact points, to avoid battery damage or casualties.

7.When disposing of the battery string, follow the local laws and regulations. Do not dispose of the battery string at will and protect the natural environment.

8.If not used for a long time, please charge the battery pack for 3 hours every 3 months.

Read all precautions and instructions in this manual before using this equipment

Assembly Caution ---------- 3

Part List ----------4

Part List ----------5

Damper Installation ----------6

Handlebar Installation ----------7

Front Fender Installation ----------8

Front disc brake Installation ---------- 9-10

Front Wheel Installation ----------11

The connection of the cable plug ----------12

Number plate Installation ----------13

Function Introduction ----------14

Part name ----------15

After-Sale Information ----------16

ASSEMBLY CAUTION

Please carefully read the following information before installation

Assembling requires at least two people
Do not tighten all screws before assembly is complete
Ensure that all accessories are complete. If not, please contact us via email

STOP

If you are missing any parts, or otherwise
have any warranty issues, please contact us first.

Shortcut: A Lot of People Doing That Way

To enhance your installation process for both speed and convenience, consider removing all accessories from the box, carefully opening the packaging, and arranging everything neatly on the floor. This preparation can streamline your setup experience.

WARNING

Choking hazard. Small parts-Please exercise caution if smallchildren or pets are present.

Sharp objects may be involved. Use precaution and protection.

Heavy object. Use lifting aids and proper lifting techniques when moving

Part List

A1 .Front Fender 1PC	A2 .Front Wheel 1PC	A3 .Number plate 1PC
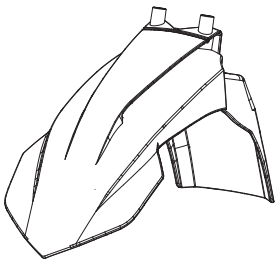	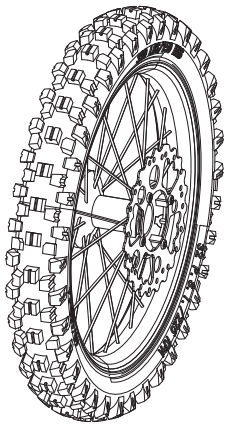	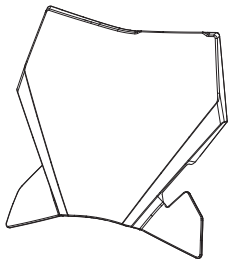
A4 .Bolt(M6*12mm) 3PCS	A5 .Front wheel mounting screws 1PC	A6 .Casing packer 1PC
	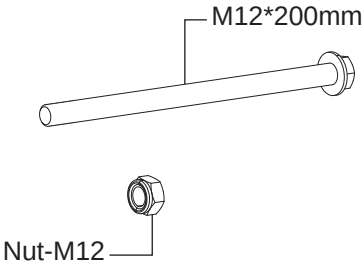 When disassembling the packaging frame, please take care to preserve it.	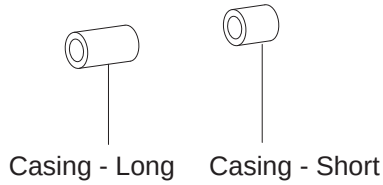 When disassembling the packaging frame, please take care to preserve it.
A7 .Bolt(M5*10mm) 2PCS	A8 .Charger 1PC	A9 .Re-installed Frame 1PC
	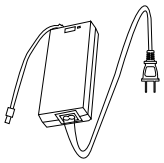	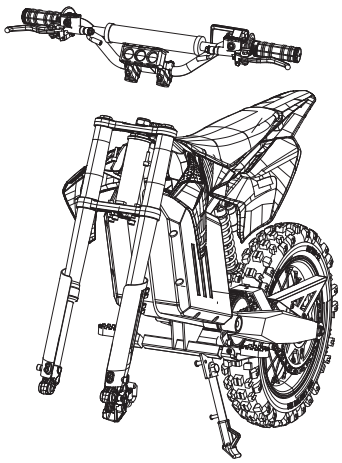

Part List

A10 .NFC card (Keep it safe) 1PC	A11 .Tool kit	A12 .Chain guard cover 1PC
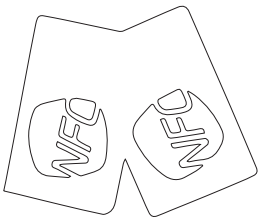	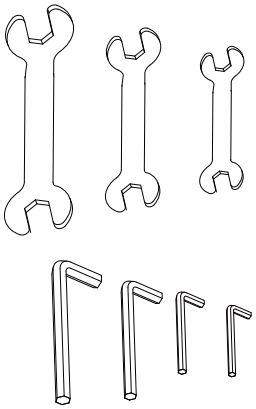	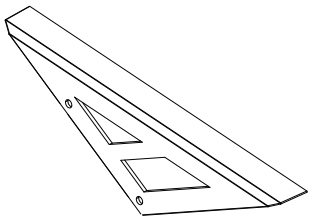
A13 .Nylon cable tie 4PC	A14 .Spool 4PC	
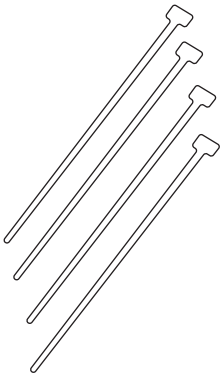		

Damper Installation

Install the shock absorber in the corresponding position. You can choose to install the shock absorber into hole 1 or hole 2 according to your own needs.

When installing the hole 2 position, the cushion will be higher. When installing the hole 1 position, the cushion will be lower.

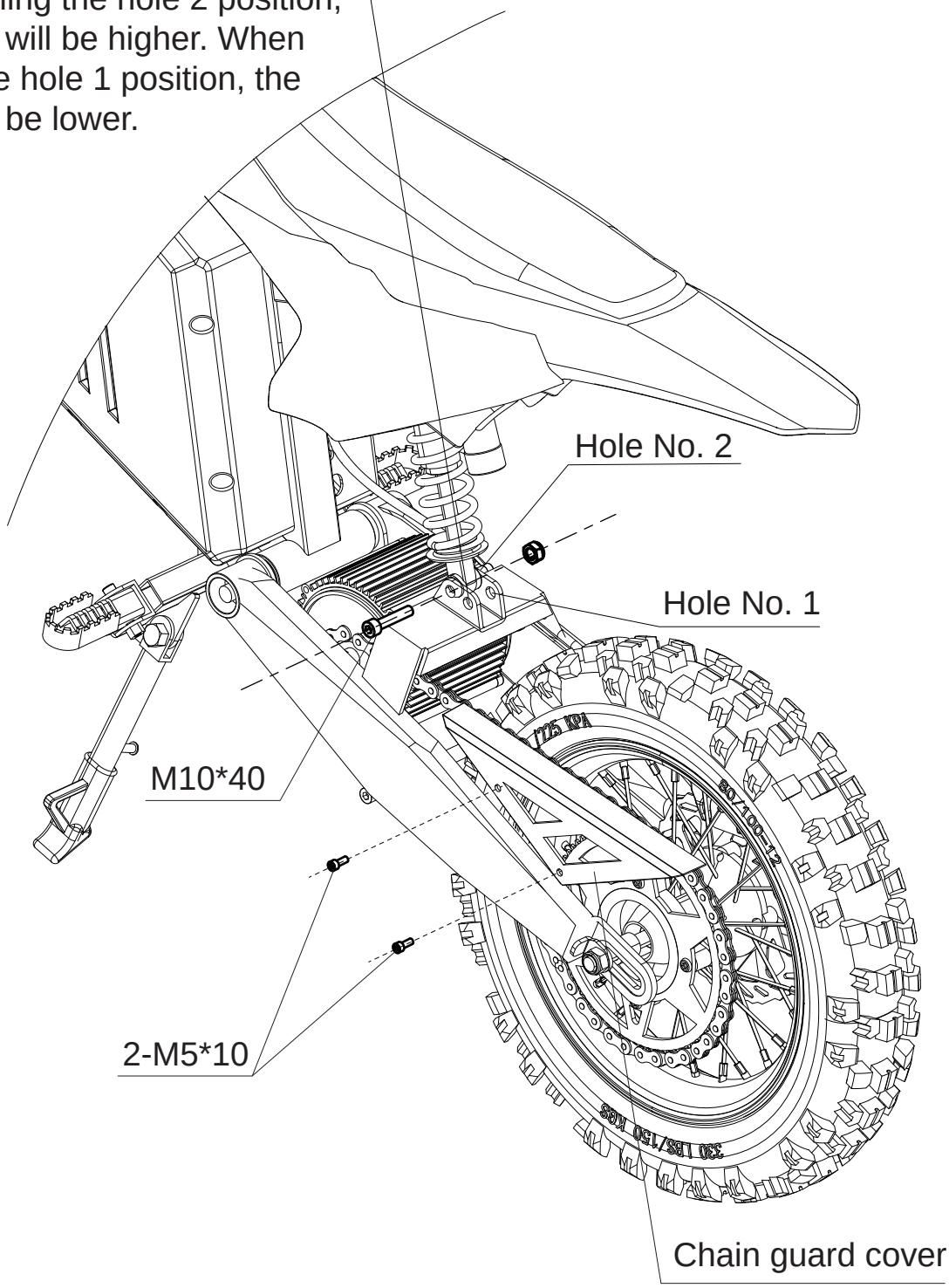

Handlebar Installation

After removing the fixed screws from the relevant positions, align them with the positions shown in the diagram and secure them with 2 M10*30 fasteners.

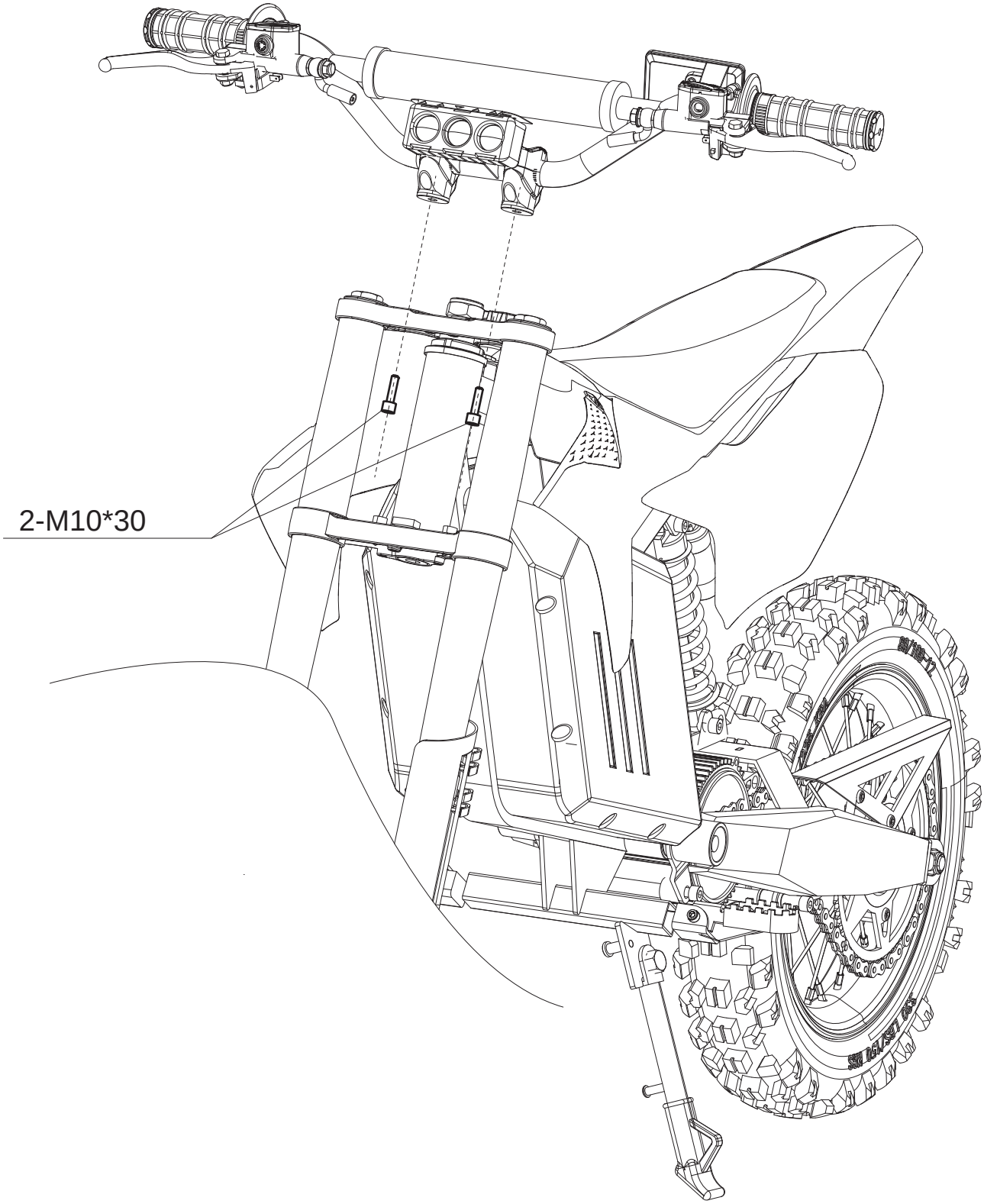

Front Fender Installation

Install the mudguards in the corresponding positions and fix them with M6*12mm screws.

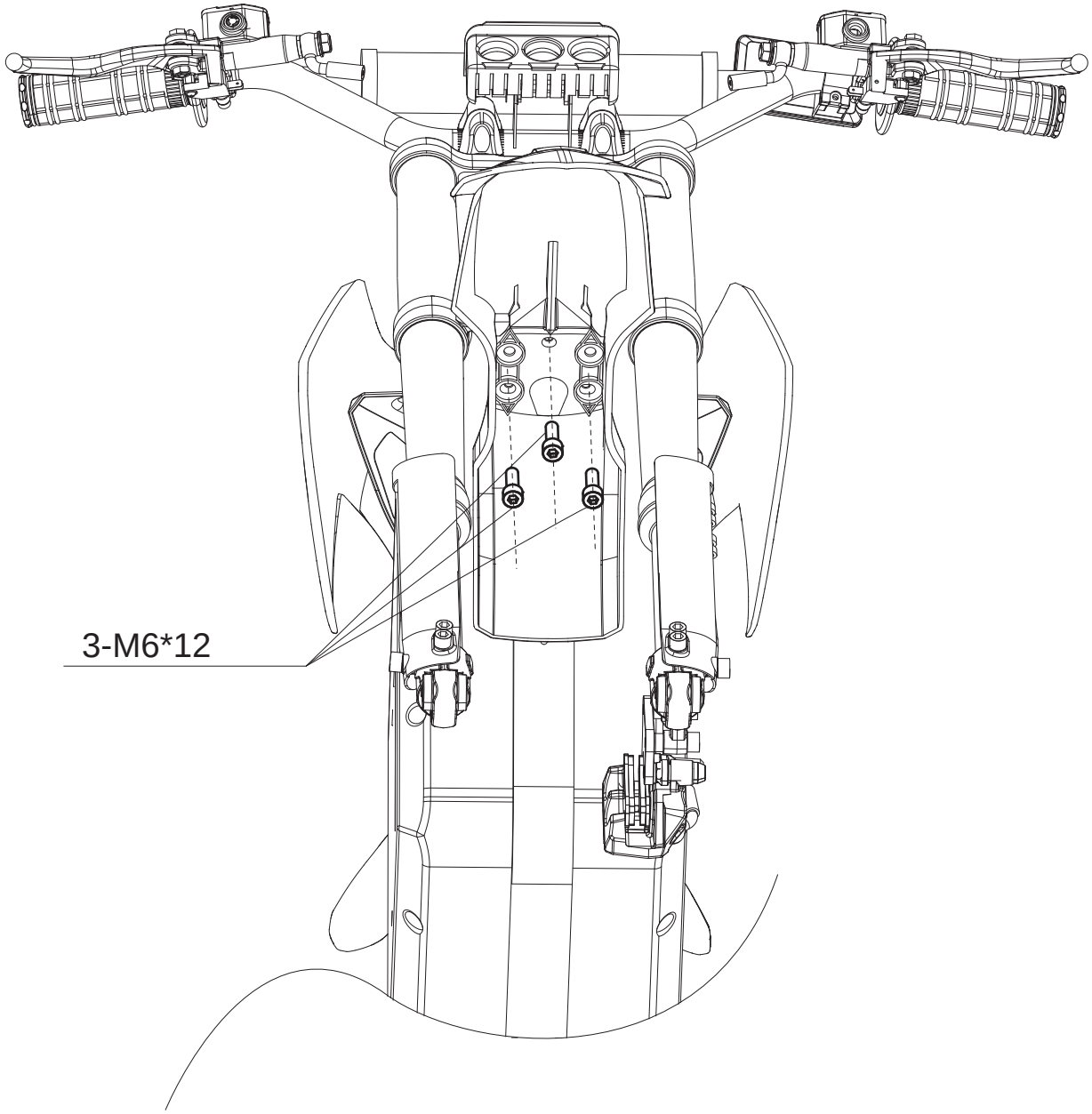

Front disc brake Installation

First, remove this screw. Then, rotate the brake caliper to the position shown in the picture and tighten the screw.

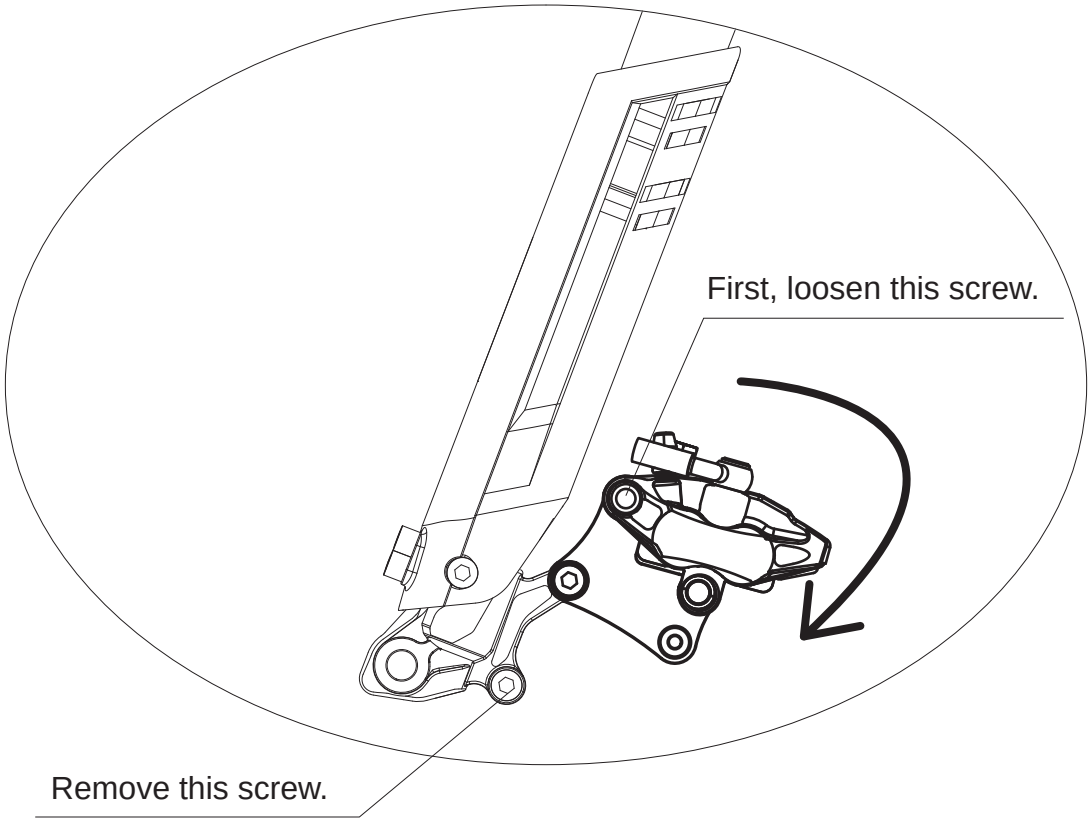

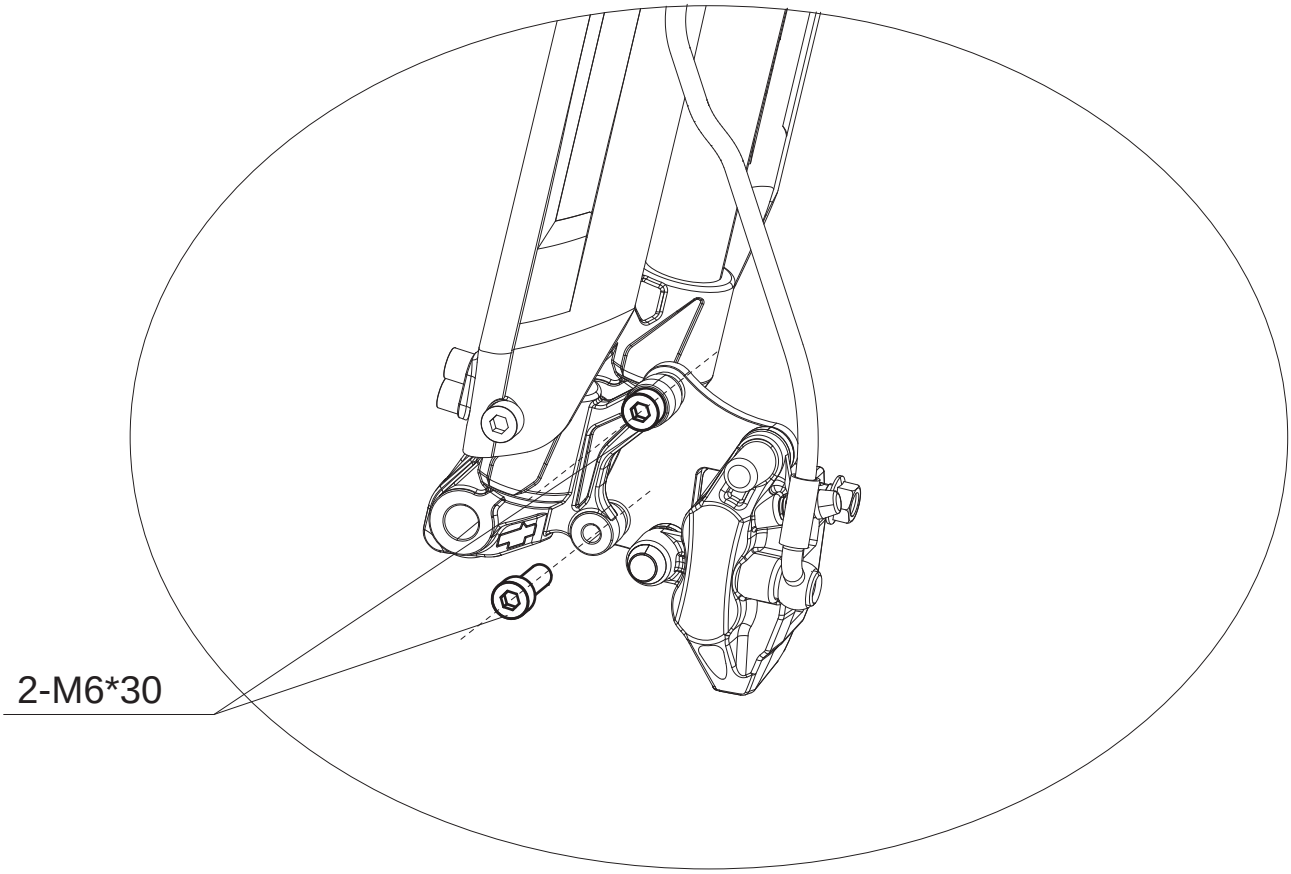

Front disc brake Installation

1.Remove the plastic piece from the caliper.

2.After removing the plastic piece from the caliper, do not squeeze the front brake lever; otherwise, it may cause damage and prevent installation.

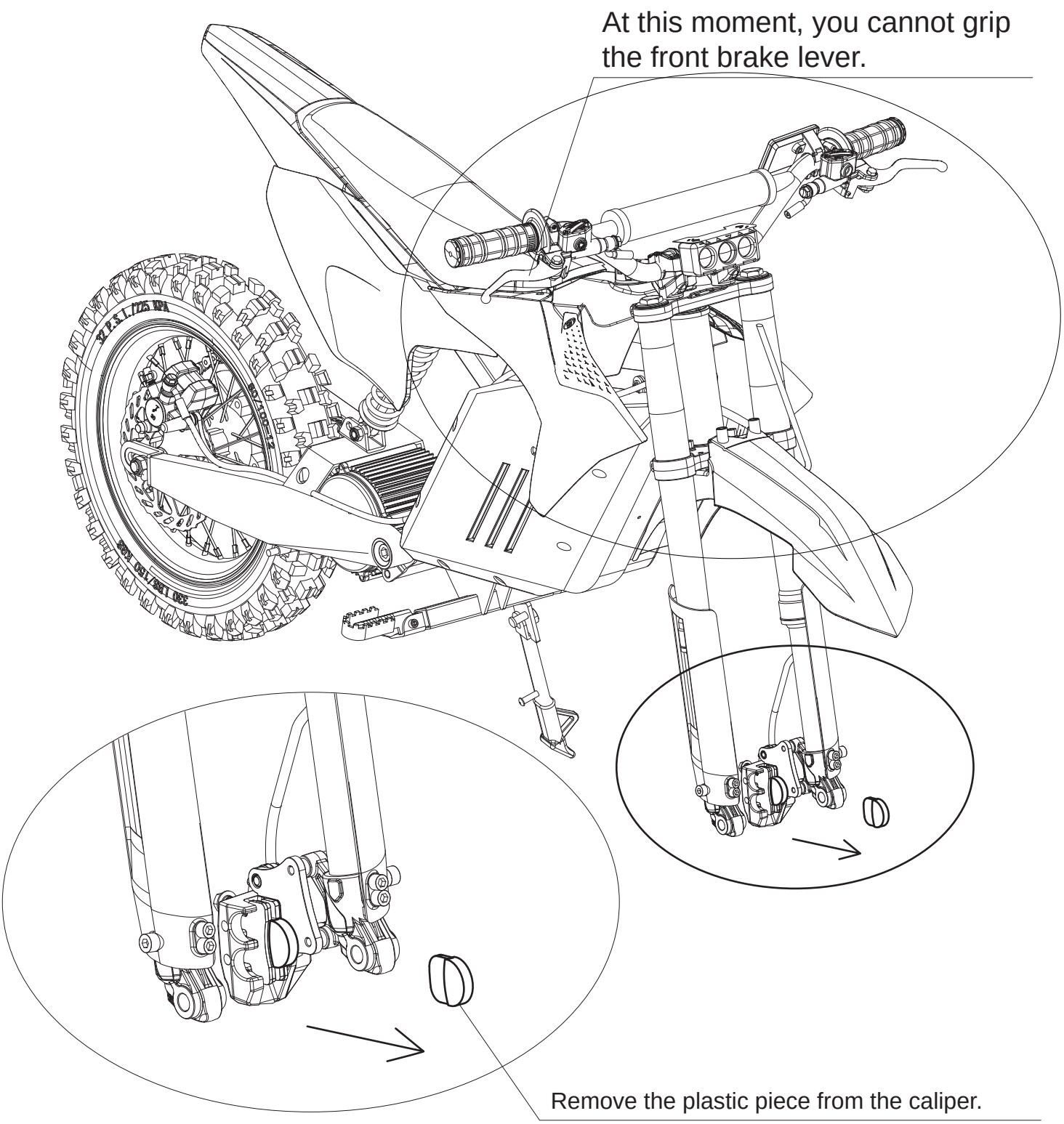

Front Wheel Installation

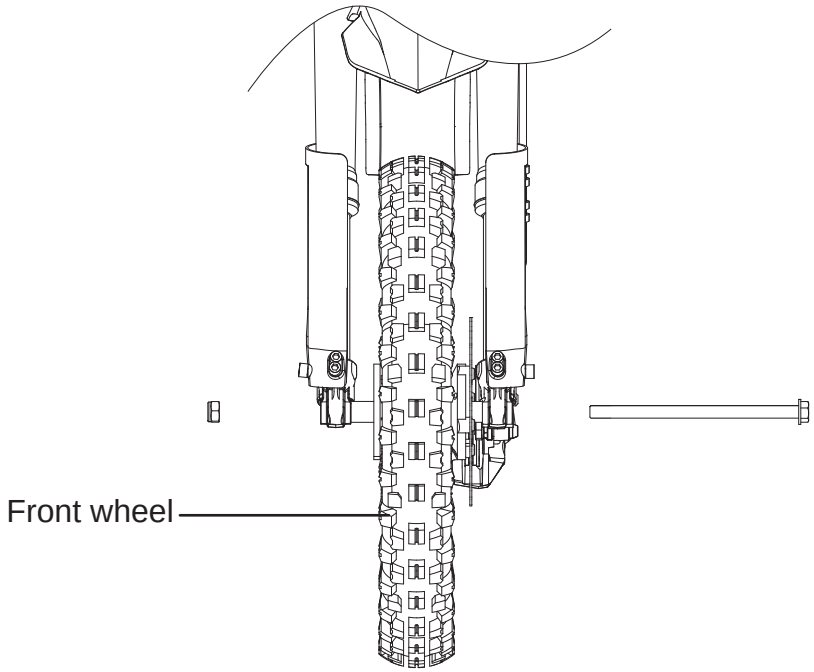

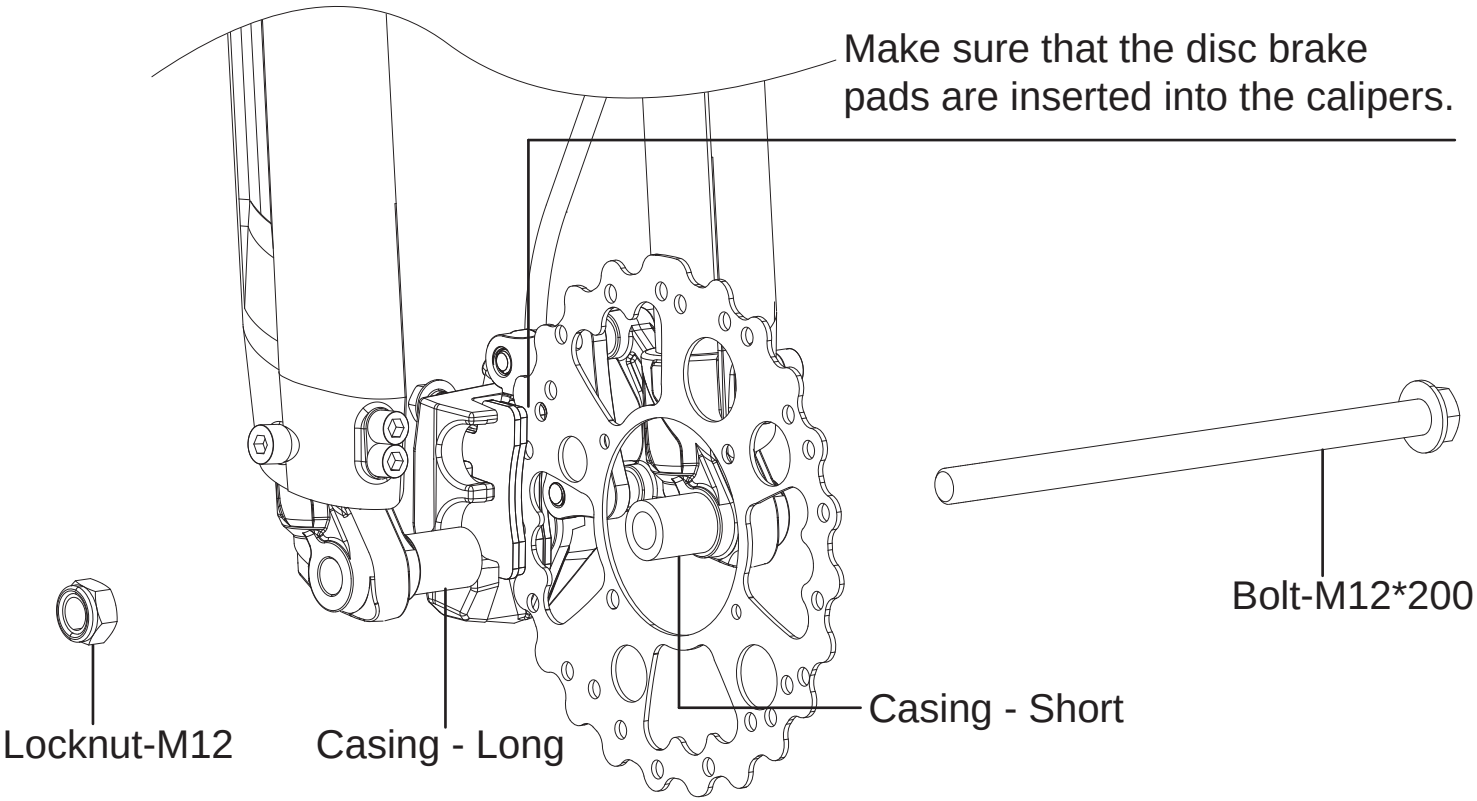

The connection of the cable plug

1.There are a total of 6 plugs that need to be connected;

Two red plugs B, power-off brake, connected in parallel with the other two red plugs B.

Green plug C , display screen, connected in parallel with another green plug C.

Blue plug D , the operation switch for the headlights and the horn, is inserted in parallel with the other blue plug D.

The yellow plug E . Throttle , connected in parallel with the other yellow E plug.

The yellow plug F . Headlight , connected in parallel with the other yellow F plug.

Note: When inserting all plugs, make sure to align the arrows on the plugs properly before inserting them, to avoid damaging the plugs.

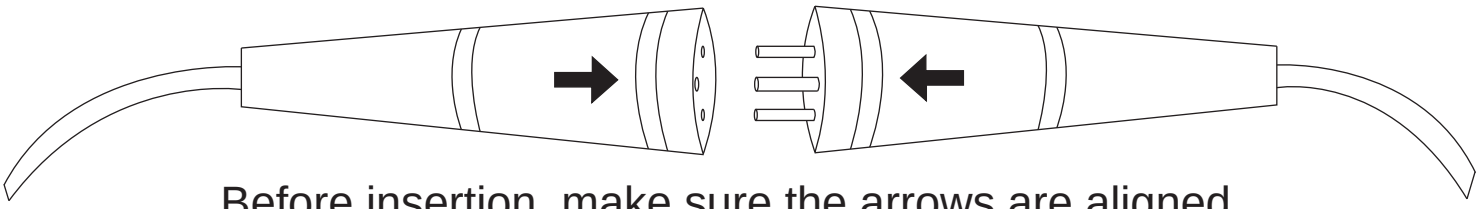

Before insertion, make sure the arrows are aligned.

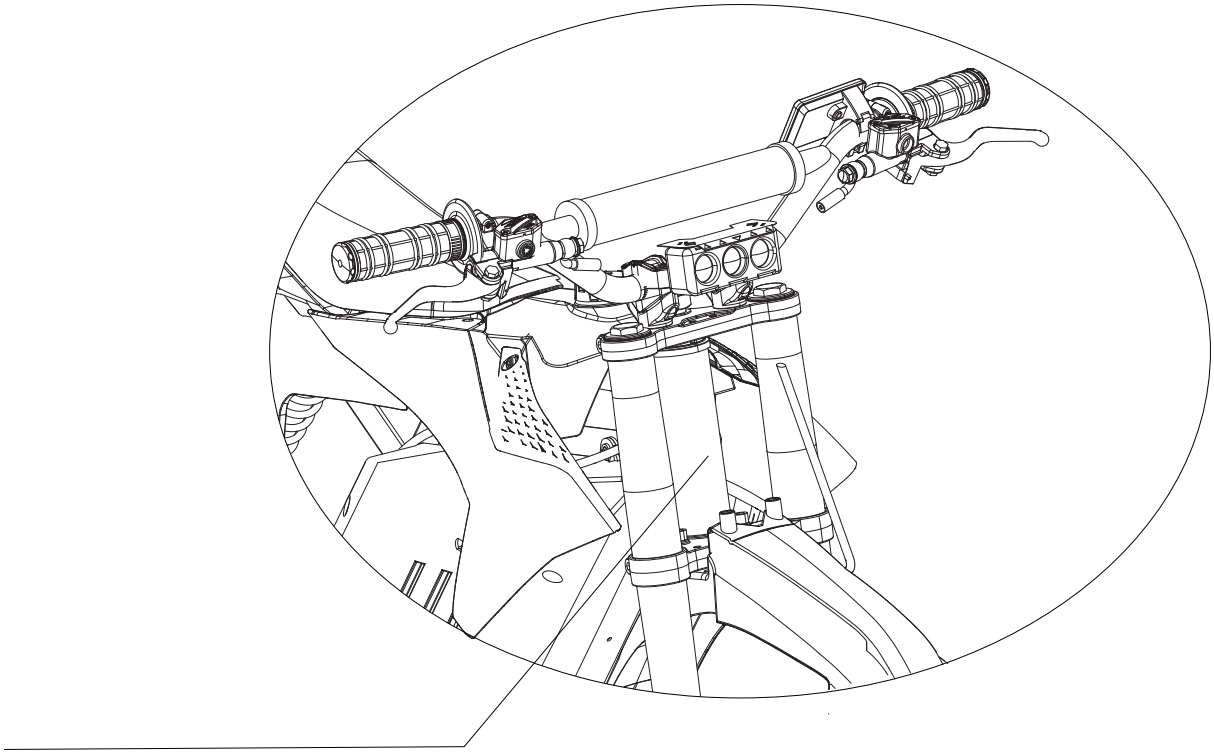

The plug to be inserted should be placed at the position of the vehicle's license plate. After the plug is inserted, the A13 and A14 components can be used to neatly organize all the plugs and wires.

Number plate Installation

Install the two cylindrical parts at the bottom of the number plate onto the two limit posts on the front fender.

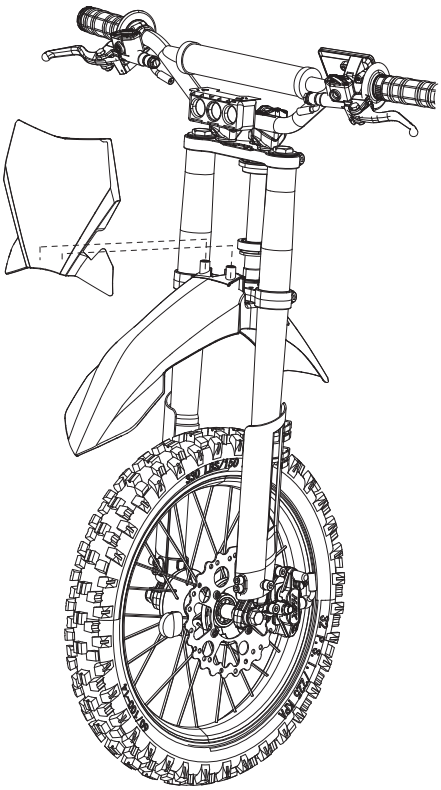

Fix the number plate with M5*18 screws.

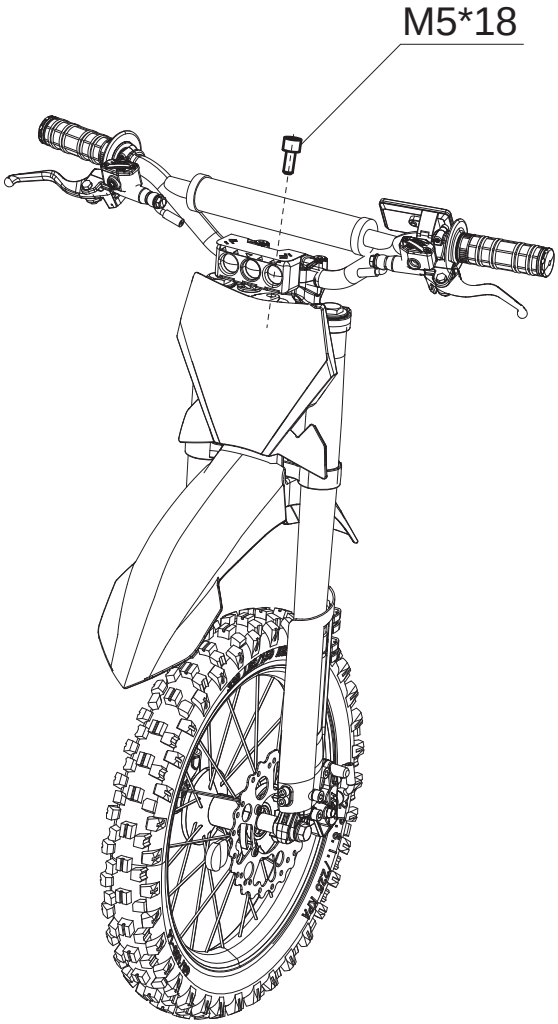

Function Introduction

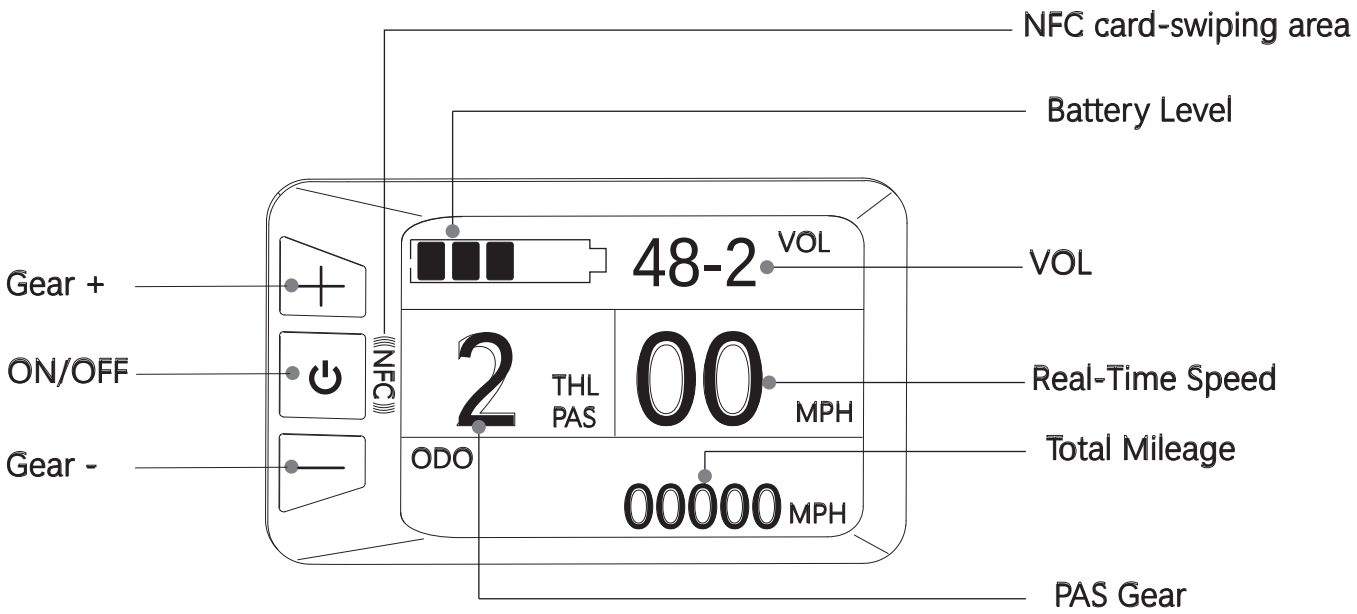

1. Hold down the ⏻ key to open the Display;
2.You can power on the device by swiping an NFC card or by entering the password. The initial password is 9999.(The password can be changed. For specific methods, please refer to the related video.)
3.Password input method: After the screen is turned on, press the "-" key. The first digit will change to 9. Then press the ⏻ key to switch to the second digit. Press the "-" key again, and this digit will change to 9. Repeat the above steps to make all four digits become 9. Finally, press the ⏻ key again to turn on the device.
4. Press the Gear+/- key to adjust the power gear;
5. Continue to press the Gear- key, you can enter the booster mode;
6. The product factory speed is set to MPH;
7. The cumulative mileage unit of the product is MPH;
8.Short pressing the M key allows you to switch between ODO, TIME, DST, ERR;

Part name

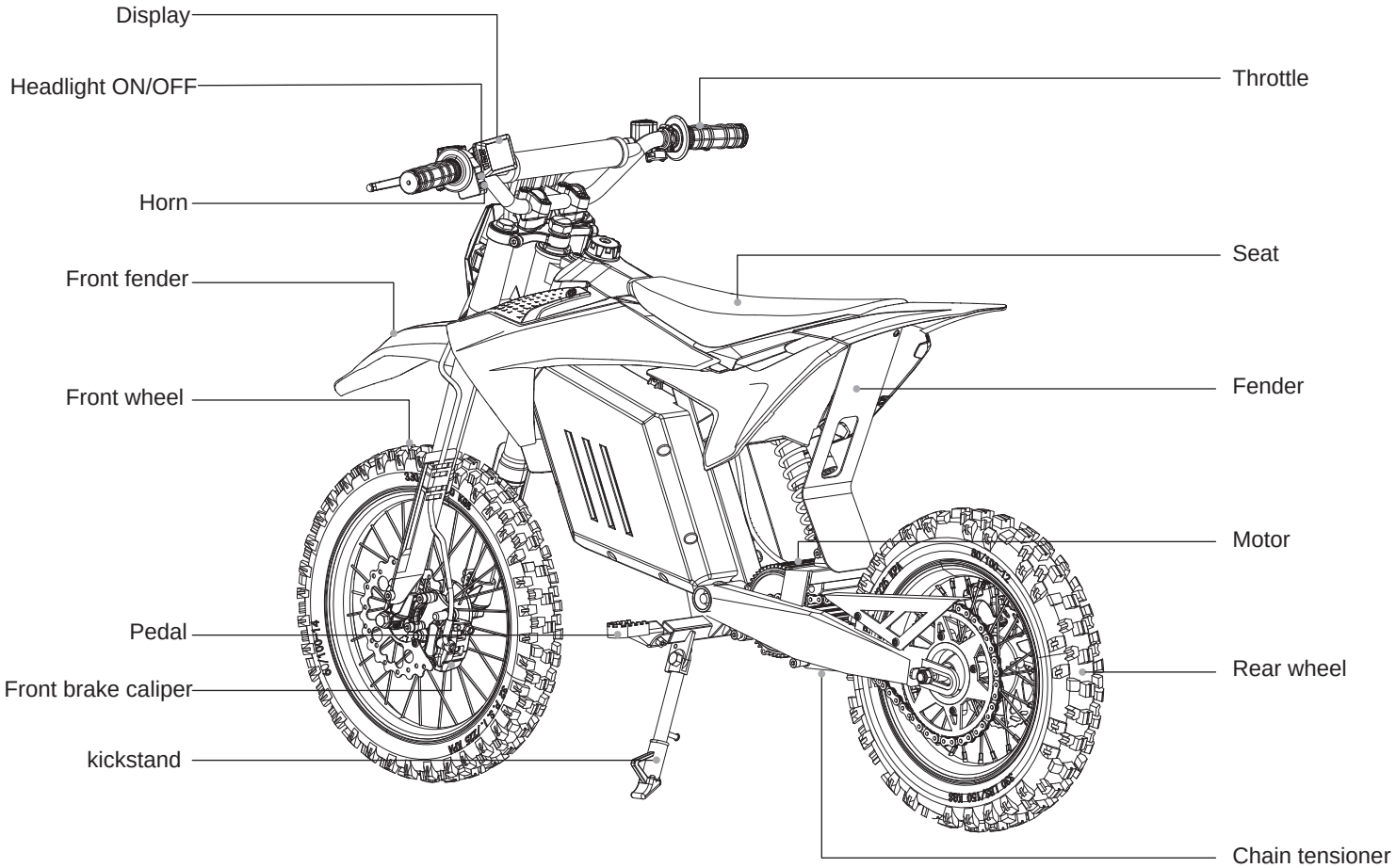
Display
Headlight ON/OFF
Horn
Front fender
Front wheel
Pedal
Front brake caliper
kickstand
Throttle
Seat
Fender
Motor
Rear wheel
Chain tensioner

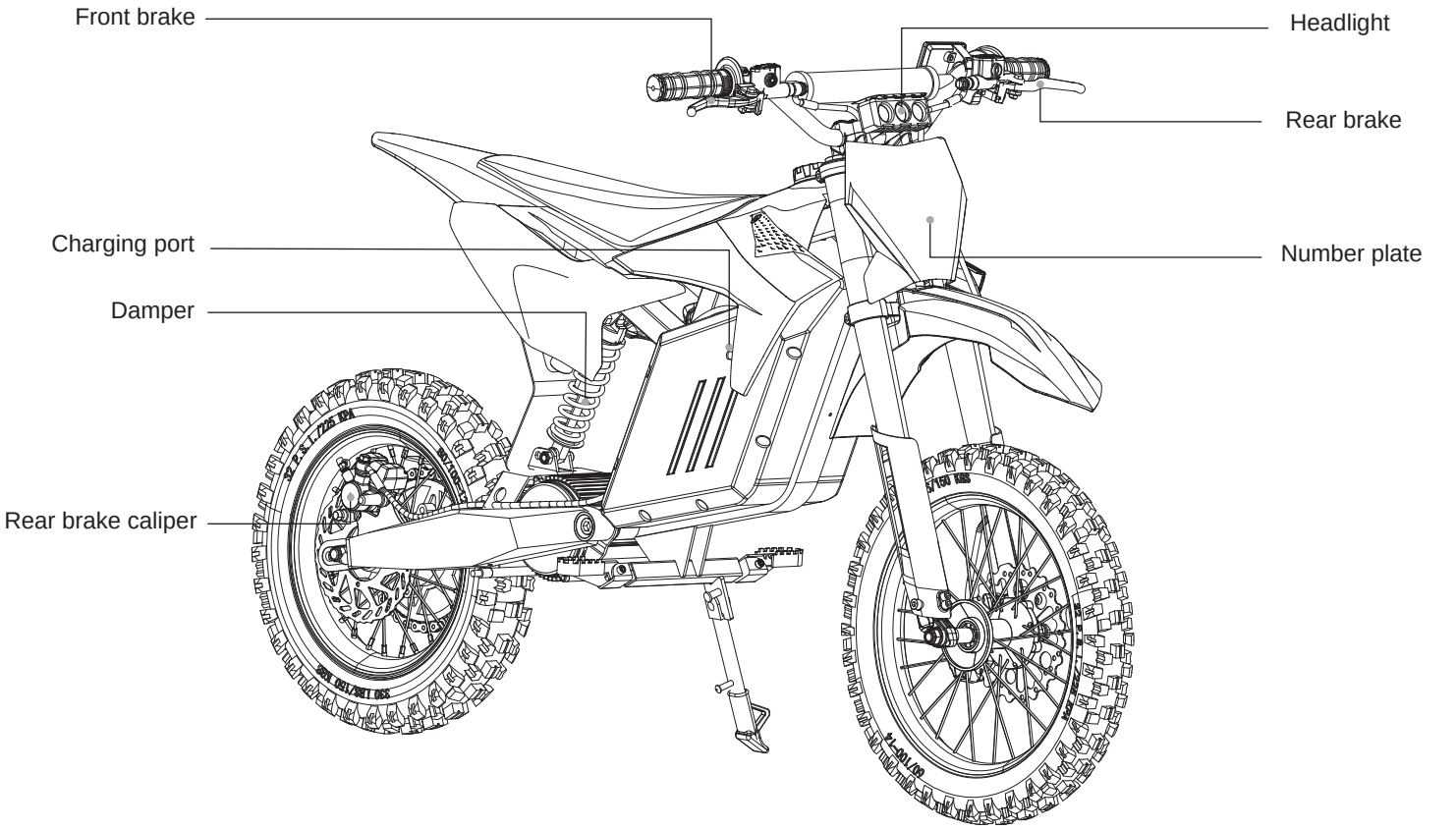
Front brake
Headlight
Rear brake
Charging port
Number plate
Damper
Rear brake caliper