LOS FLEXI

LFY2 Smart Toilet

LFY2



KEY FEATURES

- One-Piece Smart Bidet Toilet
- Big Built-in Water Tank
- 17" ADA Comfort Height
- Elgonated Toilet Seat
- Fully Skirted Trapway
- Foam Shield Protection
- Auto Open/Close Lid
- Auto Off-Seat Flush
- Heated Soft-Close Seat
- 4-Level Customizable Settings
- Self-Cleaning Nozzle
- Dense Mist Spray on Rear Wash
- 1000g MaP Pump-assisted Flushing
- LED Display Screen
- Battery Box for Emergency Flush
- Personalized User Memory
- Remote Controls Included
- Installation Kit Included

cs@losflexi.com

The above product images and drawings are not to scale and are for demonstration purposes only. Los Flexi reserves the right to make revisions without notice to product specifications. For the most current specifications, please go to www.losflexi.com or click on the product image on the first page.

LOS FLEXI

SPECIFICATIONS

Installation Type	Floor Mounted	**Model**	LFY2
Flush Type	Pump-assisted	**Bowl Shape**	Elongated
Dimensions	28 $^{9}/_{16}$"L * 17 $^{1}/_{8}$"W * 19 $^{1}/_{8}$"H	**Material**	Ceramic
Waterproof Grade	IPX4	**Net Weight**	95.70 LB
Water Pressure	Adjustable	**Seat Height**	17"
Water Temperature	Room Temp/93/98/104°F	**Rough-In**	12"
Air Dry Temperature	Room Temp/F1/F2/F3	**Water Usage**	1.28 GPF
Seat Temperature	Room Temp/93/98/104°F	**Rated Power**	1380W
Massage Function	Yes	**Rated Voltage**	110V/60Hz
Side Panel Control	Yes	**Wire Length**	5 Feet
Remote Control	Yes	**Hip Wash**	Yes
Remote Battery Type	AAA Battery ×2 (not included)	**Female Wash**	Yes
Backup Battery Type	AA Battery ×10 (not included)	**Foot Sensor**	Yes
Power Consumption	Min: 2W / Max: 1600W	**Night Light**	Yes
Warranty	1-Year Limited Warranty		

PRODUCT VIEWS



Top View



Side View



Front View



Back View

cs@losflexi.com

The above product images and drawings are not to scale and are for demonstration purposes only. Los Flexi reserves the right to make revisions without notice to product specifications. For the most current specifications, please go to www.losflexi.com or click on the product image on the first page.

LOS FLEXI

DIMENSIONS

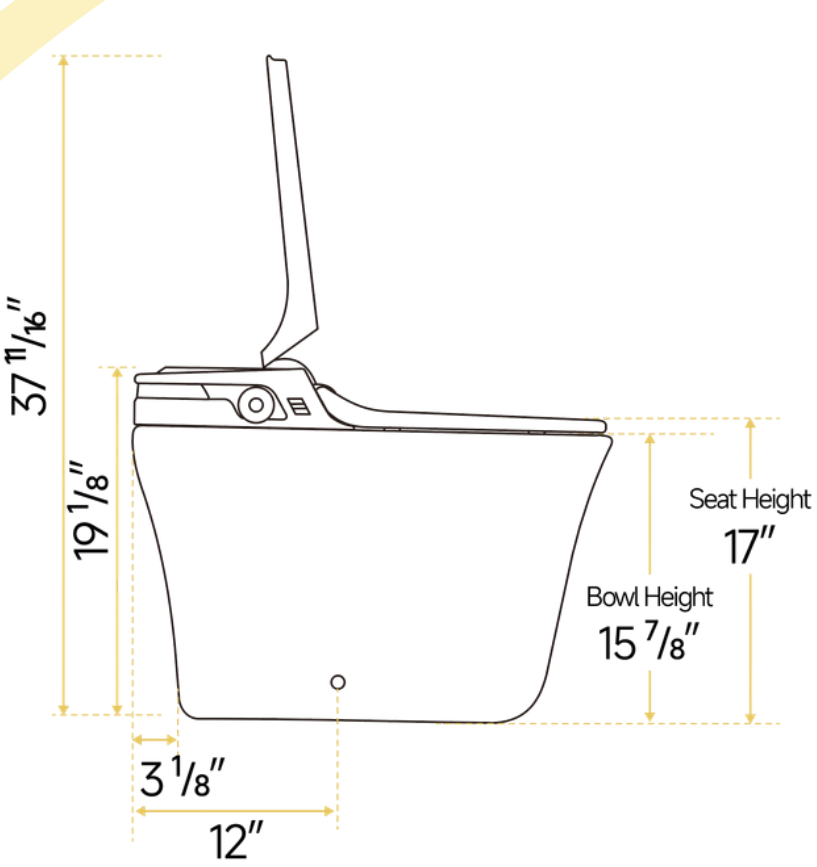

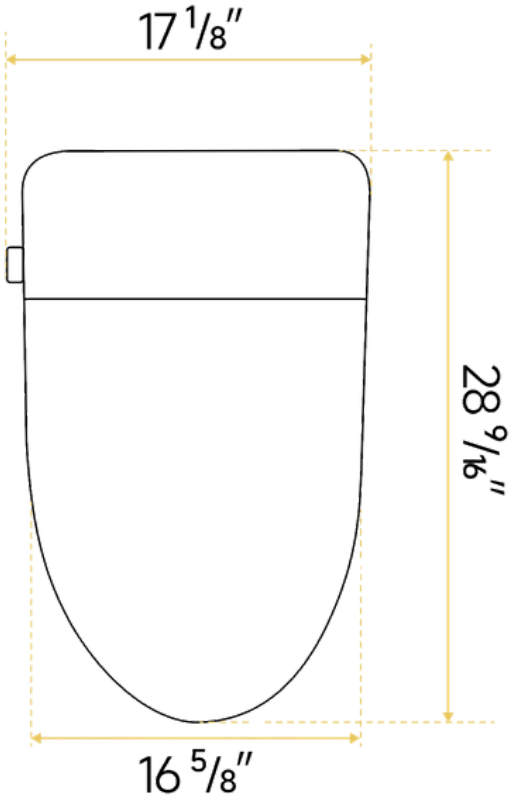

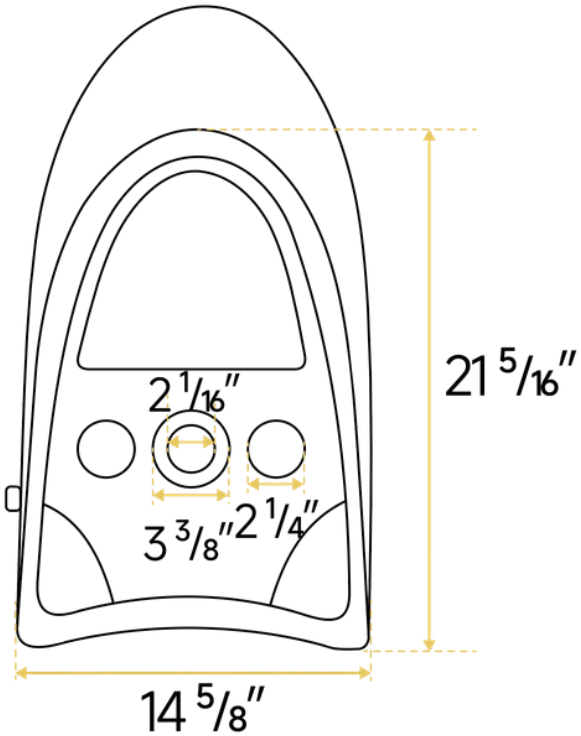

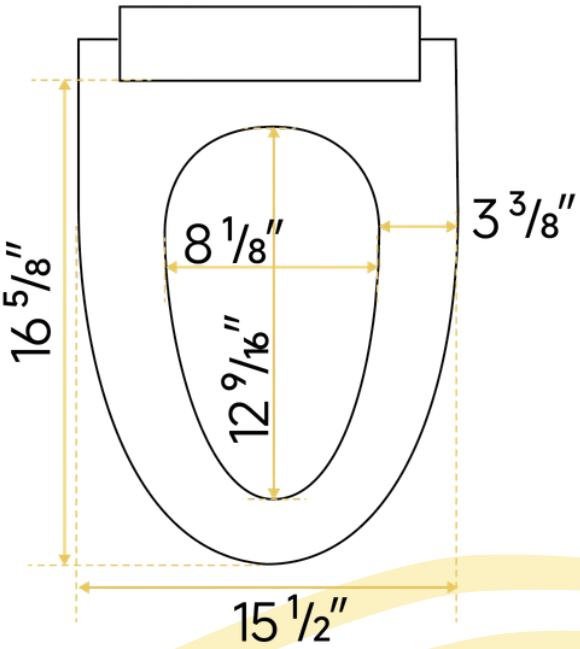

cs@losflexi.com

The above product images and drawings are not to scale and are for demonstration purposes only. Los Flexi reserves the right to make revisions without notice to product specifications. For the most current specifications, please go to www.losflexi.com or click on the product image on the first page.

LOS FLEXI

T-VALVE CONNECTION

Note: For reference only. Actual installation may vary based on clearance.

Connection Option 1:

Wall Outlet Installation

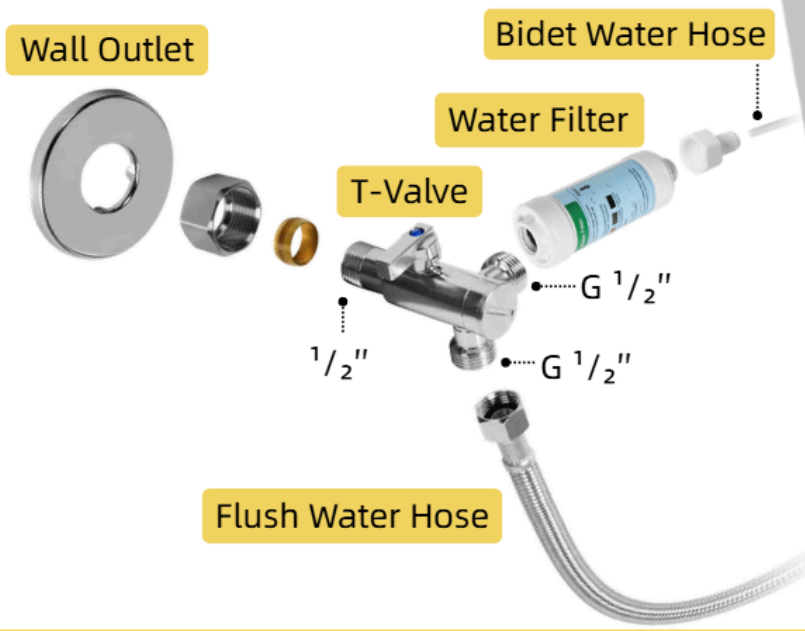

Connection Option 2:

Angle Valve Installation

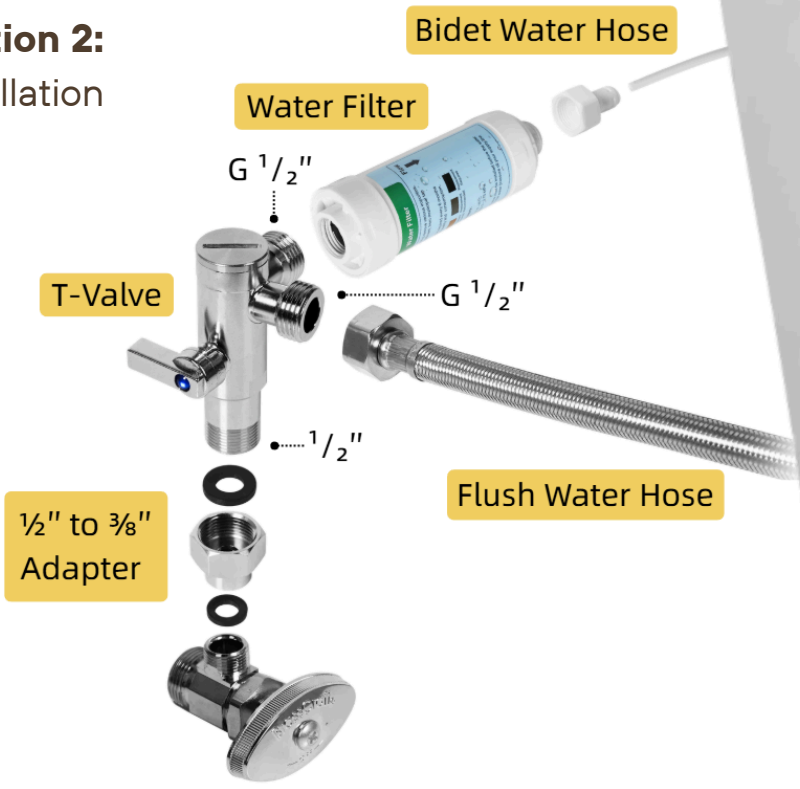

cs@losflexi.com

The above product images and drawings are not to scale and are for demonstration purposes only. Los Flexi reserves the right to make revisions without notice to product specifications. For the most current specifications, please go to www.losflexi.com or click on the product image on the first page.

LOS FLEXI

PACKAGE INCLUDES



Smart Toilet



Remote Control



Backup Battery Box



T-Valve
(1/2" Female-To-3/8" Female Adapter Included)



Water Filter



Flange Kit



Floor Mounting Kit

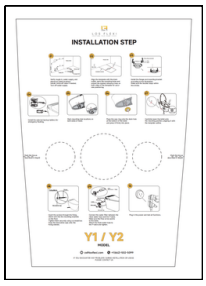

Installation Template



Foam Shield Bottle * 2



Fragrance Stick * 2



ETL-listed Plug



Installation & User Manual

cs@losflexi.com
The above product images and drawings are not to scale and are for demonstration purposes only. Los Flexi reserves the right to make revisions without notice to product specifications. For the most current specifications, please go to www.losflexi.com or click on the product image on the first page.