LOS FLEXI

LFC18-BK One-Piece Toilet

FEATURES

- One-Piece Toilet
- Elongated Toilet Bowl
- 18-Inch Height Seat
- Quick-Release Toilet Seat
- Powerful Siphon Flush
- Chrome, Dual-Flush Push Button
- Fully Skirted Design
- Easy-to-Clean Gloss Black Finish
- Installation Kit Included

LFC18-BK



SPECIFICATIONS

Brand	Los Flexi	**Dimensions**	24 7/8" L * 15 1/8" W * 28 1/2" H
Model	LFC18-BK	**Installation Type**	Floor Mounted
Color	Black	**Seat Material**	Polypropylene
Bowl Material	Ceramic	**Flush Type**	Siphon Flush
Bowl Shape	Elongated	**Water Usage**	1.0 / 1.28 GPF
Net Weight	97 LB	**Water line**	Accept 1/2" & 7/8"
Seat Height	18 1/4"	**Country of Origin**	China
Rough-In	12"	**Warranty**	Limited 2-Year Warranty

cs@losflexi.com

The above product images and drawings are not to scale and are for demonstration purposes only. Los Flexi reserves the right to make revisions without notice to product specifications. For the most current specifications, please go to www.losflexi.com or click on the product image on the first page.

LOS FLEXI

PRODUCT VIEWS



Top View



Front View



Side View



Back View

PACKAGE INCLUDES

- One-Piece Toilet
- Toilet Seat & Lid
- Push Button
- Seat Bolt Kit
- Wax Ring & Bolt Kit
- Side Hole Covers
- Adapter
- User Manual
- Warranty Card

cs@losflexi.com

The above product images and drawings are not to scale and are for demonstration purposes only. Los Flexi reserves the right to make revisions without notice to product specifications. For the most current specifications, please go to www.losflexi.com or click on the product image on the first page.

LOS FLEXI

DIMENSIONS

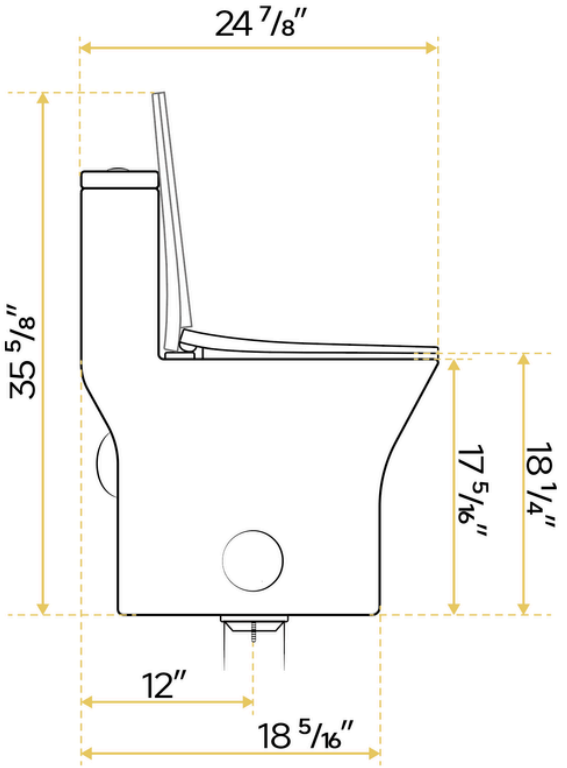

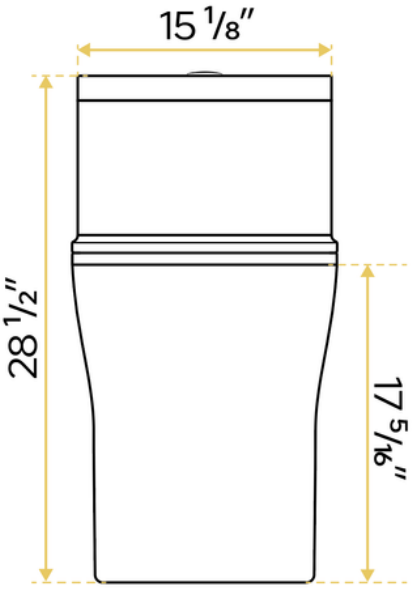

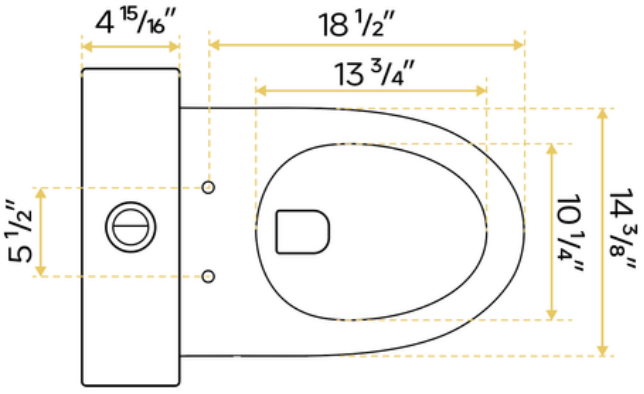

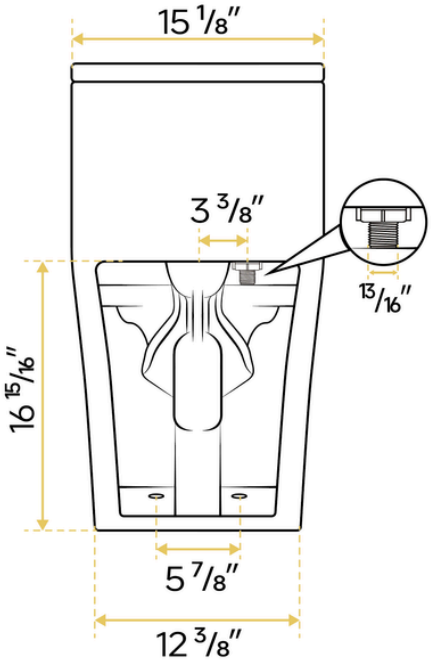

cs@losflexi.com

The above product images and drawings are not to scale and are for demonstration purposes only. Los Flexi reserves the right to make revisions without notice to product specifications. For the most current specifications, please go to www.losflexi.com or click on the product image on the first page.