SAFETY PRECAUTIONS

- Place the dehumidifier on a flat surface to minimize vibration and noise.
- Before use, check the power cord for any damage. Do not operate the dehumidifier if the power cord or plug is damaged.
- Insert the three-prong plug into a matching electrically grounded outlet (120V/60Hz, at least 5A). Do not cut off the third prong or modify the power cord length.
- Avoid operating the dehumidifier in standing water and ensure the motor and wiring stay dry.
- Never immerse the dehumidifier in water or other liquids.
- Keep the dehumidifier away from heat-generating devices, flammable materials, orhazardous substances.
- Turn off and unplug the power supply before cleaning or storing the dehumidifier.
- Always grasp the plug (not the cord) to unplug.
- Do not insert fingers or other objects into the air inlet or outlet.
- Avoid sitting, standing, or placing heavy objects on the dehumidifiers.
- Disconnect the power if you notice strange sounds, odors, or smoke coming from the dehumidifier.
- Do not operate or turn off the dehumidifier by plugging in or unplugging it. Use the control panel instead.
- This dehumidifier should only be used by adults who have read the manual and understand its operation.
- This dehumidifier is not intended for use by individuals (including children) with reduced physical, sensory or mental capabilities, unless supervised or instructed by someone responsible for their safety.
- Children should be supervised to ensure that they do not play with the dehumidifier.
- Do not tilt the dehumidifier while it is operating to prevent water overflow.

PARTS IDENTIFICATION

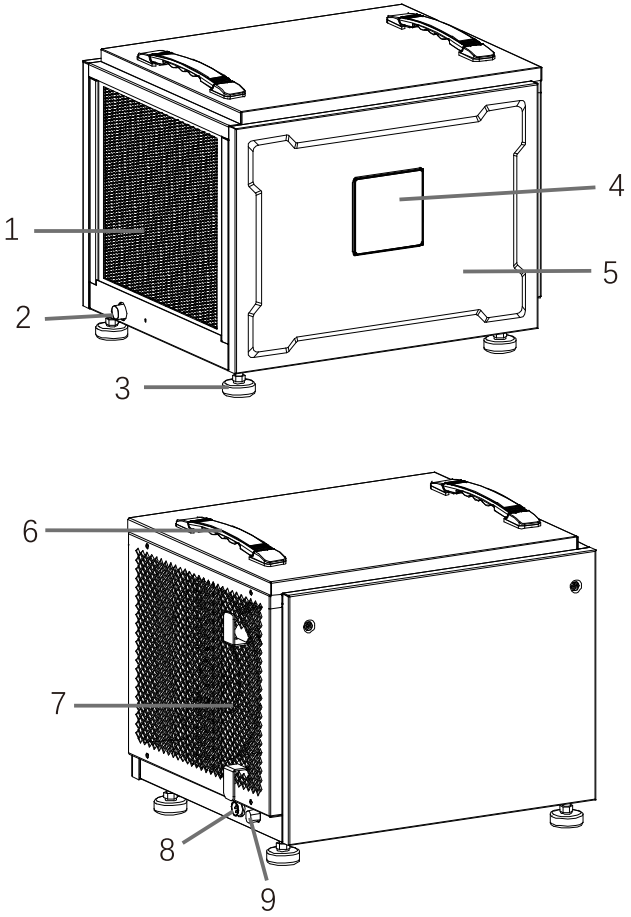

1. Air Inlet
2. Gravity Drain Outlet
3. Adjustable Foot
4. Control Panel
5. Service Panel
6. Handle
7. Air Outlet
8. Remote Control Port
9. Power Cord Port

NOTE: DO NOT OBSTRUCT THE AIR INLET OR OUTLET.

INSTALLATION INSTRUCTIONS

1. Recommended Installations

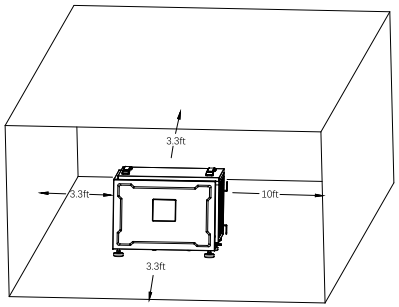

Adequate Clearance: Keep the air outlet at least 10 feet from obstacles and the air inlet at least 3.3 feet from obstacles.

Following the above recommendations will help prevent the discharged air from being drawn back into the unit, ensuring the dehumidifier operates effectively.

2. Position Your Dehumidifier

- Install the dehumidifier horizontally to minimize vibration and or noise.
- You can adjust the feet to level the dehumidifier.

To adjust the feet,

- Turn the nut in a clockwise direction to get the nut loosen;
- Turn the foot in a clockwise direction to get the foot down or turn the foot in a counterclockwise direction to get the foot up;
- Turn the nut in a counterclockwise direction to fix the foot.

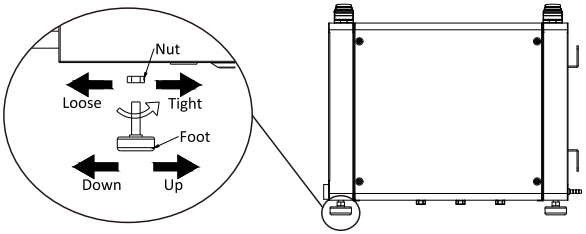

For optimal outcomes, please:

- Operate your dehumidifiers in an enclosed area.
- Close all doors and windows that open to the outside to maximize water removal efficiency.
- Place your dehumidifier away from obstructions, and keep it away from anything that could block airflow into and out of the unit.

3. Set up the Drainage System

Drain by Gravity

If the drainage point is below the gravity drain outlet and located nearby, with no upward lift required, you may use gravity drainage.

When using gravity to drain:

• Attach the gravity drain hose to the Gravity Drain Outlet.

• Direct the hose to a suitable drainage facility, ensuring it is positioned lower than the dehumidifier's drain outlet and free from kinks or blockages.

OPERATION INSTRUCTIONS

1. Plug in the Electrical Cord

IMPORTANT

Please let the dehumidifier sit outside the box for **24 hours** before initial plugging in.

To properly operate the dehumidifier, please plug it into a GFCI-protected 120-volt outlet with a rating of at least 5 amps. Uncoil the power cord and securely connect it to an appropriate outlet.

Note: When the dehumidifier is first plugged into AC power, the control panel display will light up for a second, which is part of the dehumidifier's self-diagnosis procedure and no action is required. This indicates that the dehumidifier is functioning correctly and ready to operate effectively. You will still need to press the POWER button to turn the dehumidifier on.

2. Control Panel Instruction

The control panel of the dehumidifier features a user-friendly interface with 4 buttons and an LED screen. Press the POWER Button to turn the dehumidifier on. After turning on the dehumidifier, the LED screen will display the readouts.

If not been operated for over 30 seconds, the control panel will become dim until pressed buttons again.

