Sunward® | K-1163

60" x 42" drop-in bath

Features

- Oval basin creates a spacious bathing experience
- Integral lumbar support and armrests offer extra comfort while bathing
- Textured bottom surface



Available Colors/Finishes

Color tiles intended for reference only.

0 White

1-800-4KOHLER (1-800-456-4537)
Kohler Co. reserves the right to make revisions without notice to product specifications.
For the most current specification sheet, go to www.kohler.com USA or www.kohler.ca Canada.
3-27-2026 16:33 - US-CA

Codes/Standards

CSA B45.5/IAPMO Z124

Technical Information

All product dimensions are nominal.

Drain Location:	Reversible
Drain Hole Diameter:	2-1/4" (57 mm)
Basin Area, Bottom:	43" x 21-9/16" (1092 mm x 548 mm)
Basin Area, Top:	53-1/2" x 32-1/8" (1359 mm x 816 mm)
Water Depth:	15" (381 mm)
Water Capacity:	57 gal (215.8 L)
Minimum Floor Load:	33 lbs/ft^2
Weight:	75 lbs (34 kg)

Material

- Acrylic

Recommended Products/Accessories

K-576 Undermount kit for select 60" Sunward bath and whirlpool bath models

K-1491 Bath/whirlpool pillow, removable

K-1601 Bath/whirlpool footstop, removable

K-23726 Drain treatment

K-23732 Tub & shower cleaner

Warranty

See website for detailed warranty information.

KOHLER® Plastic Baths and Shower Bases Lifetime Limited Warranty

1-800-4KOHLER (1-800-456-4537)
Kohler Co. reserves the right to make revisions without notice to product specifications.
For the most current specification sheet, go to www.kohler.com USA or www.kohler.ca Canada.
3-27-2026 16:33 - US-CA

THE BOLD LOOK OF KOHLER.

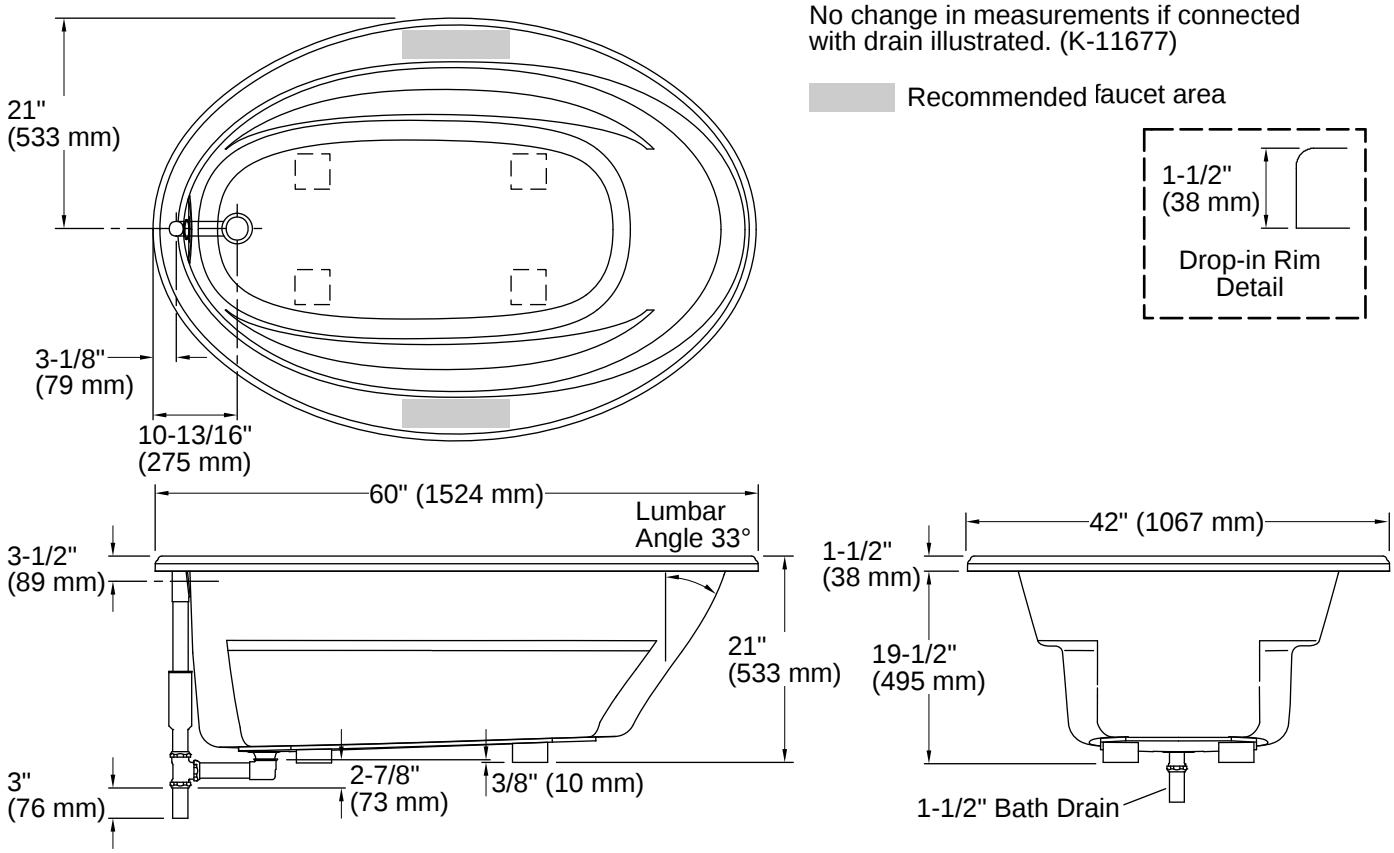

Installation

- Reversible drain
- Drop-in or undermount

Installation Notes

Install this product according to the installation instructions.

Measure your actual product for rough-in details.
The hot water supply should be 70% of the capacity of the bath or greater. Installations will vary.
Kit is required for under-mount installations (sold separately).

1-800-4KOHLER (1-800-456-4537)
Kohler Co. reserves the right to make revisions without notice to product specifications.
For the most current specification sheet, go to www.kohler.com USA or www.kohler.ca Canada.
3-27-2026 16:33 - US-CA

THE BOLD LOOK OF KOHLER.