TILE READY® Model 3754R (37"D x 54"W - Curb on 54" side - Right Drain)

SCALE: 1/12

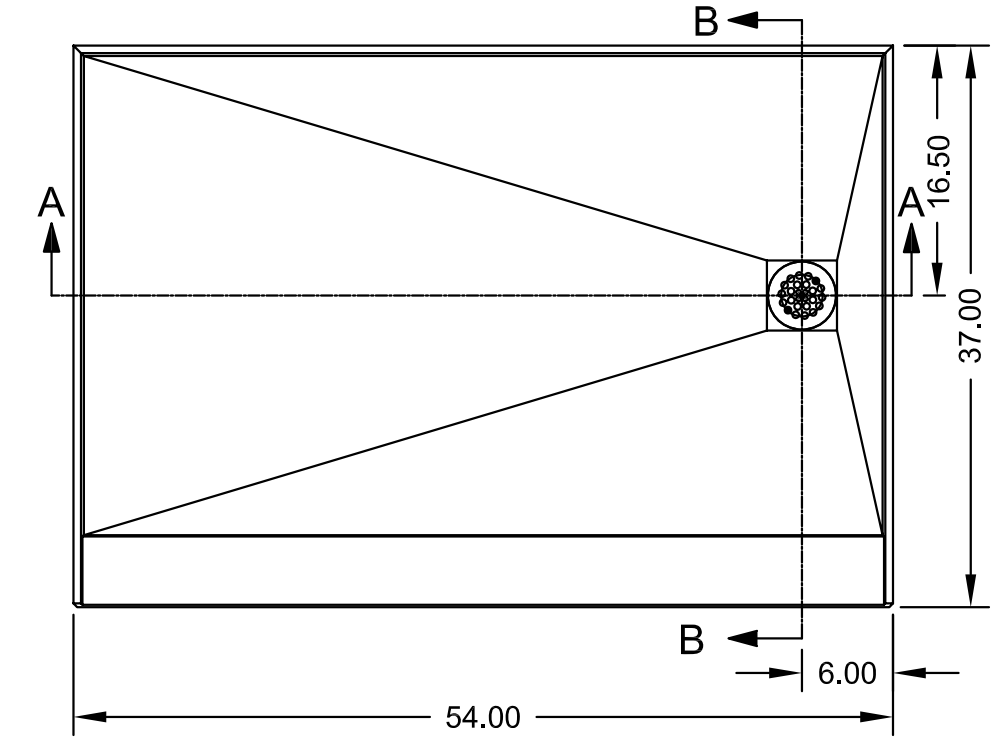

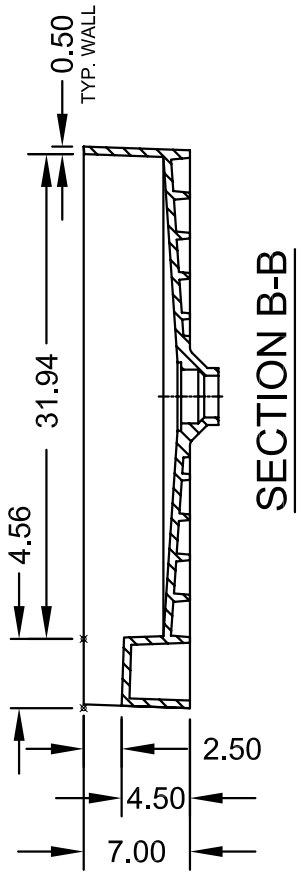

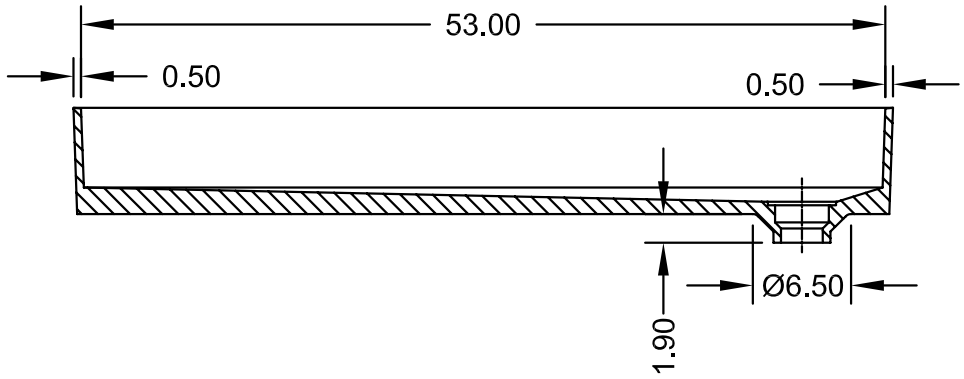

SECTION A-A

Product Features:

.Intergrated 2" PVC drain (adaptable to cast iron and ABS)
.Intergrated curb with structural ribbing
.6" Splash Walls
.Floor pre-pitched ¼" per foot to drain
.Tile set directly on pan surface
.No mud setting or hot mopping required
.Round polished adjustable drain plate (square plates available)

ANSI Z124.1-95	ASTM F462-79
ANSI Z124.2-95	B45.0-02
ICC/ANSI A117.1.98	B45.5-02

Toll Free 800.232.6156 techsupport@tileredi.com
Tel: 954.323.0125
Fax: 954.344.8064 www.tileredi.com

tile redi®
Perfection through Innovation