USER MANUAL

W2660P369119
W2660P369120

Portable Dog Ramps

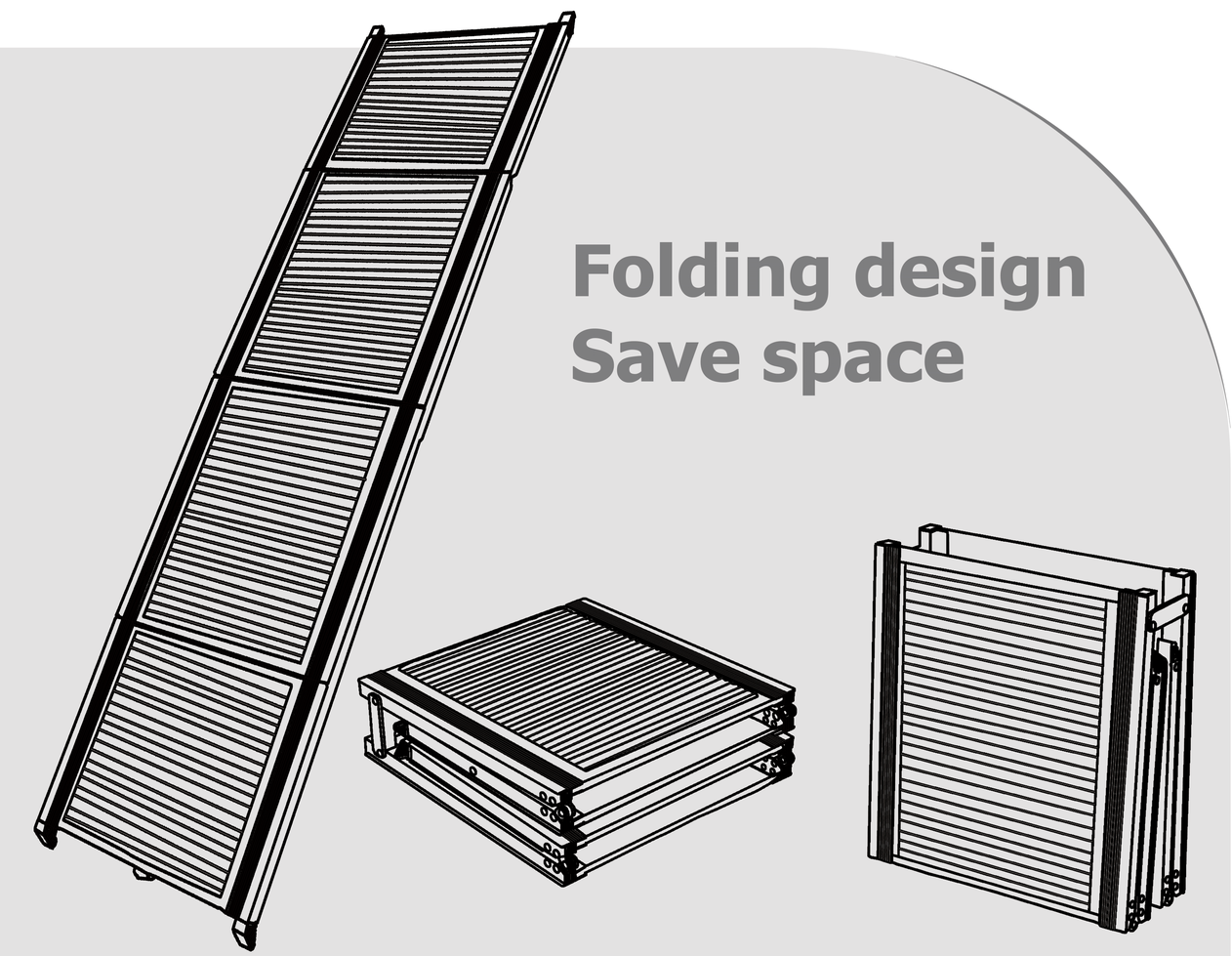

PORTABLE DOG RAMPS

EASY SETUP

Unfold, Attach, Lock - A Seamless Installation for Your Convenience.

SPACE-SAVING STORAGE

Occupies Minimal Space, Making Storage and Transport Convenient.

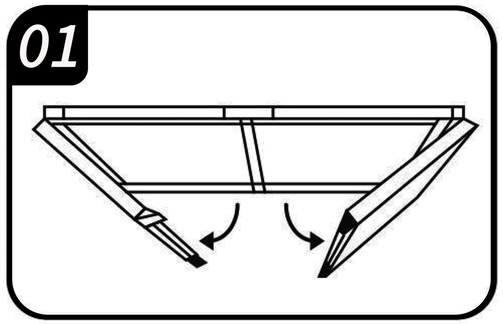

Unfold to use

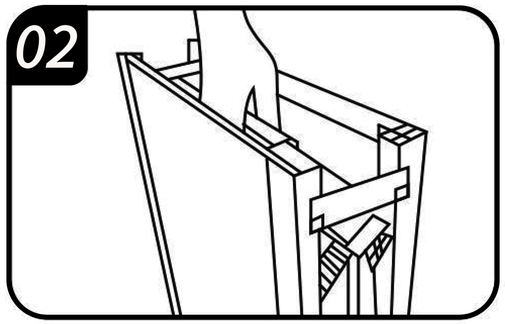

Reinforced Handle

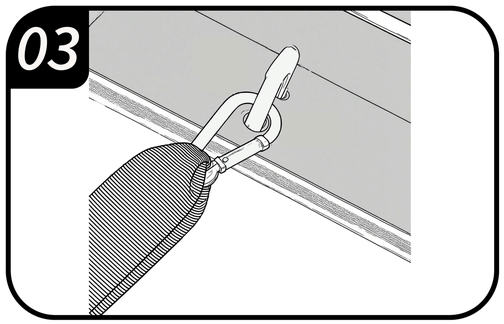

Safety Tether

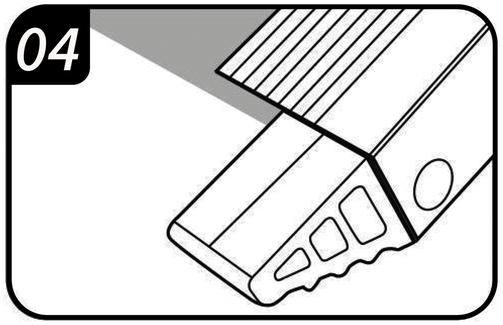

Anti-Slip Feet