MODEL 6633
CEILING FAN LIGHT

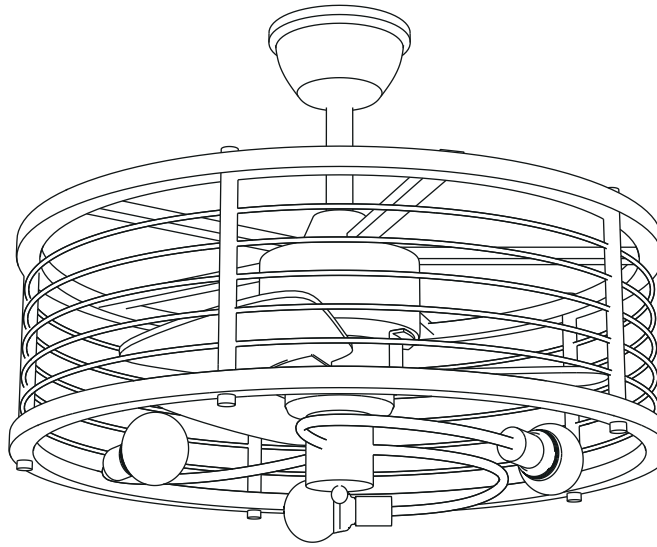

product instruction manual

Email:uroadmin@urogoo.com

This manual is designed to make it as easy as possible for you to assemble, install, operate and maintain your ceiling fan.

Tools Needed for Assembly

- One Phillips head screwdriver
- One stepladder
- One wire stripper

Materials

Wiring outlet boX and box connectors must be of type required by the local code. The minimum wire would be a 3-conductor(2-wire with ground) of the following size:

Installed Wire Length	Wire Size A.W.G
Up to 50 ft	Up to 50 ft
50-100 ft	50-100 ft

NOTE: Place the parts from the loose parts bags in a small container to keep them from being lost. If any parts are missing contact your local retailer

⚠ WARNING

Before assembling your ceiling fan, refer to section on proper method of wiring your fan (page 10).If you feel you do not have enough wiring knowledge or experience, have your fan installed by a licensed electrician.

Package Includes

Check to see that you have received the following parts:

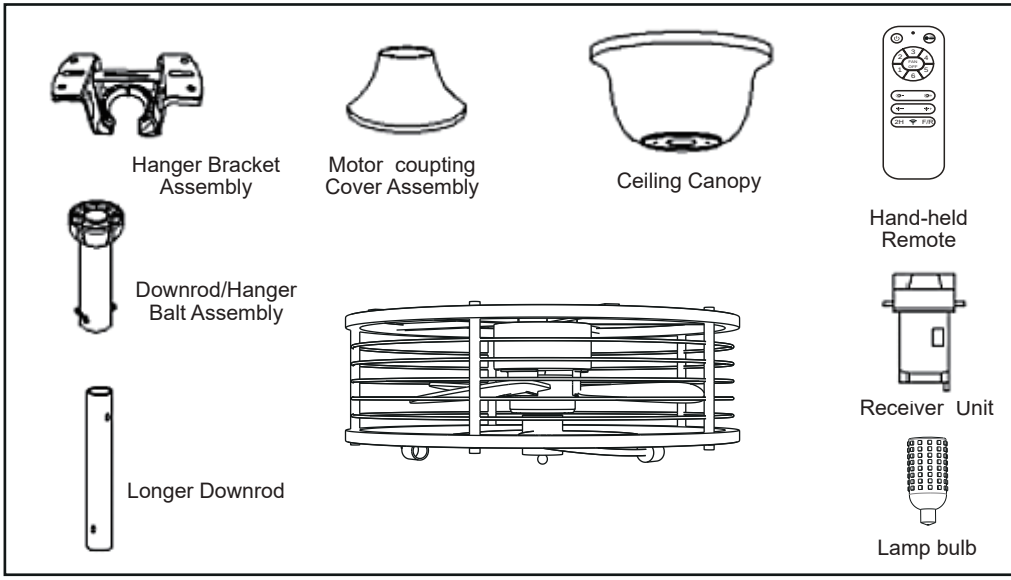

Energy Efficient Use of Ceiling Fans

Ceiling fan performance and energy savings rely heavily on the proper installation and use of the ceiling fan. Here are a few tips to ensure efficient product performance.

Choosing the Appropriate Mounting Location

Ceiling fans should be installed,or mounted.in the middle of the room and at least 10 feet above the floor and 18 inches from the walls. If ceiling height allows, install the fan 11-12 feet above the floor for optimal airflow.

Turn Off When Not in the Room

Ceiling fans cool people, not rooms.If the room is unoccupied,turn off the ceiling fan to save energy.

Using the Ceiling Fan Year Round

Summer Season:Use the ceiling fan in the clockwise direction. The airflow produced by the ceiling fan creates a wind-chill effect, making you "feel" cooler, Select a fan speed that provides a comfortable breeze, lower speeds consume less energy.

Electrical and Structural Requirements

Your new ceiling fan will require a grounded electrical supply line of 120 volts AC, 60 HZ. 15 Amp Circuit. Electrical code requires use of a fan-rated outlet box to support the extra weight and motion associated with a ceiling fan. A fan-rated box will be labeled as such and typically supports up to a 70lbs ceiling fan. Fan-Rated Outlet Boxes vary in ratings and design. Ensure the ratings of your ceiling fan outlet box meet the requirements for the ceiling fan being installed.Figure 1,Figure 2 and Figure 3 depicts different structural configurations that may be used for mounting the outlet box.

Low-profile use (Figure 1)

A 1 2-in-deep pancake box is meant to be screwed to a joist or block. I's used if only one cable is coming into the box. It is also available in a saddle-mount configuration.

Deep-profile use (Figure 2)

A 2-1 -in.-deep box can be attached to blocking between joists and is roomy enough to handle more than one cable.

Brace use (Figure 3)

Paired with a deep box, this hanger is meant to span between two joists and takes the place of wooden blocking.

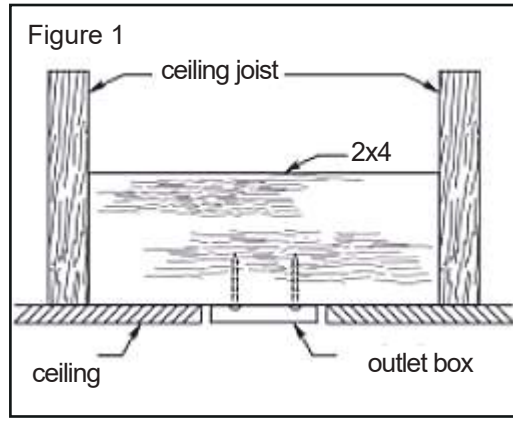

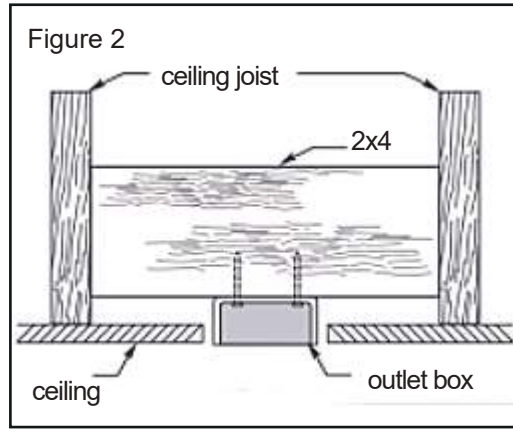

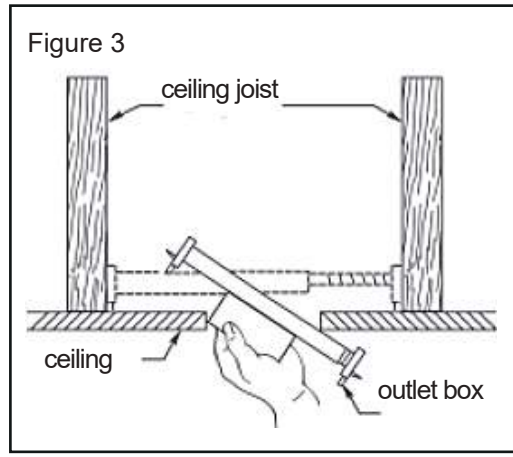

⚠ WARNING

To reduce the risk of fire, electrical shock, or personal injury, mount fan to outlet box marked acceptable for fan support of 15.88 kg (35 lbs) or less.Use screws supplied with outlet box. Most outletboxes commonly used for support of light fixtures are not acceptablefor fan support and may need to be replaced. Consult a qualified electrician if in doubt.

If your fan is to replace an existing light fixture, turn electricity off at the main fuse box at this time and remove the existing light fixture.

⚠ WARNING

Turning off wall switch is not sufficient. To avoid possible electrical shock, be sure electricity is turned off at the main fuse box before wiring. All wiring must be in accordance with National and Local codes and the ceiling fan must be properly grounded as a precaution against possible electrical shock.

⚠ WARNING

Do not operate this fan with a variable (Rh-eostat) wall controller or dimmer switch. Doing so could result in damage to the ceiling fan's remote control unit.

How to Assemble Your Ceiling Fan

1. Remove the hairpin clip and clevis pin from the bottom of the downrod. Retain the pin and clip for reinstallation .(Figure 1)

Figure 1

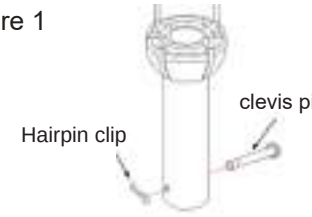

2. Pass the ceiling canopy and the motor coupling cover through the bottom of the downrod successively.(Figure 2)

Figure 2

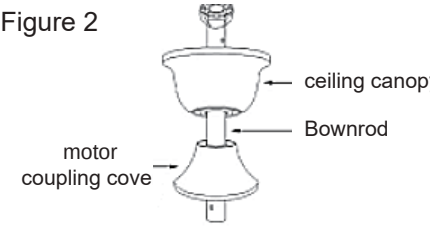

3. Loosen the two set screws and locking nuts in the downrod support of the motor assembly. Route the black, white and blue wires through the downrod. (Figure 3)

Figure 3

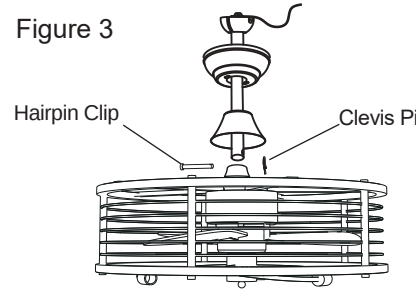

4.Place downrod into the downrod support on top of the motor. Install the clevis pin by aligning the holes in the downrod support with holes in the downrod. Secure clevis pin with hairpin clip. Tighten the two set screws with nuts in the downrod support and cover the motor coupling cover well. (Figure 4)

Figure 4

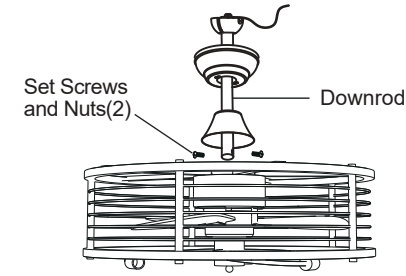

⚠ WARNING

It is critical that the clevis pin in the downrod suport is properly installed and the set screws and nuts are securely tightened. Failure to do so could result in the fan falling.

How to Assemble Your Ceiling Fan

5.Install the bulbs into the lamp sockets. (Figure 5)

NOTE: All set screws must be checked, and retightened where necessary, before installation.

(Figure 5)

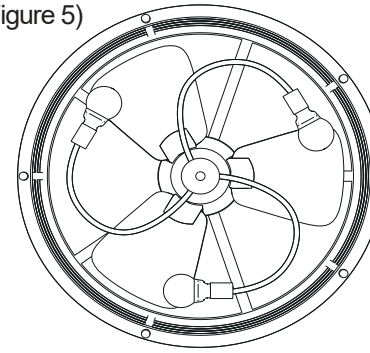

How to Hang Your Ceiling Fan

⚠ WARNING

To avoid possible fire or shock, be sure electricity is turned off at the main fuse box before hanging. (Figure 1).

NOTE: If you are not sure if the outlet box is grounded, contact a licensed electrician for advice, as it must be grounded for safe operation.

⚠ WARNING

The fan must be hung with at least 10'of clearance from floor to blades. (Figure 2)

1. Securely attach the hanger bracket to the outlet box(not included) using the screws and washers supplied with the outlet box. (Figure 3)box. (Figure 3)

⚠ WARNING

The outlet box must be securely anchored. Hanger bracket must seat firmly against outlet box. If the outlet box is recessed, remove wall board until bracket contacts box. If bracket and /or outlet box are not securely attached, the fan could wobble or fall.

2. Carefully lift the fan and seat the down-rod/hanger ball assembly on the hanger bracket that was just attached to the outlet box. Be sure the groove in the ball is lined up with tab on the hanger bracket. (Figure 4)

NOTE: This fan is intended for standard or angled mounting only. Closemount and flush- mount options are not available. For angled ceilings, note the angle can be no more than 19°.

⚠ WARNING

Failure to seat tab in groove could cause damage to wires and possible shock or fire hazard. To avoid possible shock, do not pinch wires between the hanger ball assembly and the hanger bracket.

Figure 1

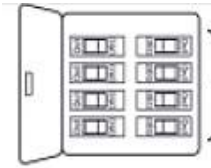

Figure 2

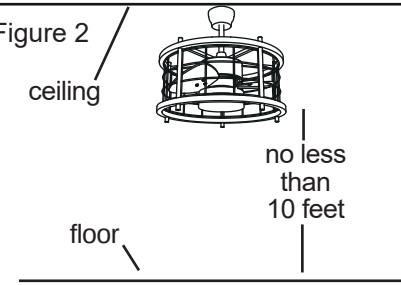

Figure 3

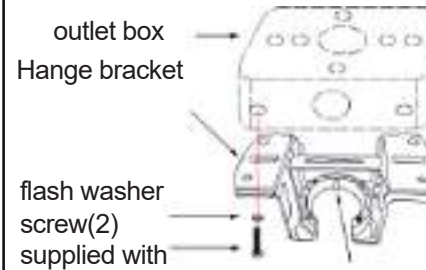

Figure 4

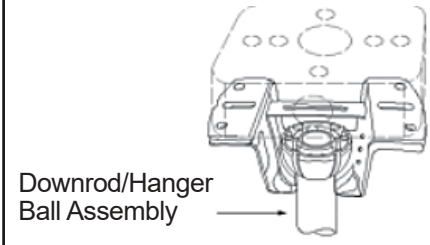

How to Wire Your Ceiling Fan

CAUTION: INCORRECT WIRE CONNEC-
TION WILL DAMAGE THIS RECEIVER.

Connect the light with the wires of the same color,After connections have been made, slide the receiver into the hanger bracket, carefully push leads into the outlet box.

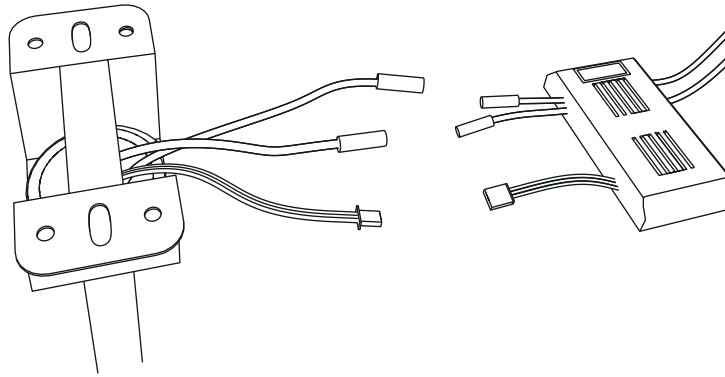

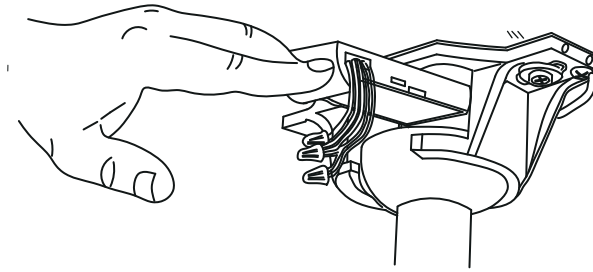

1.Connect the yellow, gray and white wire ports with the corresponding colors of the drive

2.Connect the red, black and white wire ports with the corresponding colors of the drive

3.Connect the live line and zero line of the drive to the power supply

How to install Your Canopy Housing

NOTE: This step is applicable after the neces- sary wiring is completed

1. Assemble ceiling canopy by rotating key slot in canopy over two protruding screws in hanger bracket. (Figure 1)

⚠ WARNING

To avoid possible fire or shock, make sure that the electrical wires are completely inside the canopy housing and not pinched between | the housing and the ceiling.

Figure 1

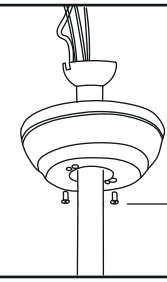

How to operate your ceiling fan

1. IMPORTANT: Using a full range dimmer switch(not included) to control fan speed will damage the fan. To reduce the risk of fire or electrical shock, do not use a full range dimmer switch to control the fan speed. (Figure 1)

2. Restore electrical power to the outlet box by turning the electricity on at the main fuse box. (Figure 2)

Figure 1



for illustrative purpose only-not intended to cober all types of controls

⚠ WARNING

Check to see that all connections are tight, including ground, and that no bare wire is visible at the wire connectors, except for the ground wire.

⚠ WARNING

Do not operate this fan with a variable (Rheostat) wall controller or dimmer switch. Doing so could result in damage to the ceil- ing fan's remote control unit.

Figure 2



main fuse box

How to operate your ceiling fan

1. Restore electrical to the outlet box by turning the electricity on at the main fuse box.

2. Remove the battery cover from the remote control transmitter, install the battery, and replace the cover.
   Note:
   1). Use AAA 2 1.5V battery to replace battery.
   2). If not using for long periods of time, remove the battery to prevent damage to the remote transmitter, and store the remote transmitter away from excess heat or humidity.

3. The buttons on the remote control transmitter control the fan speed and light as follows.

