Model LBWDM06BKBC

Liv EZ™ Filtered and Chilled Water Dispenser Midnight TAG

PRODUCT SPECIFICATIONS

Liv EZ™ Filtered and Chilled Water Dispenser Midnight. Chilling Capacity of 1.5 GPH (gallons per hour) of 50° F drinking water, based on 80° F inlet water and 90° F ambient, per ASHRAE 18 testing. Features shall include Chilled Water, Filtered, Mechanically Activated, Total PFAS + Lead Filter, Laminar Flow, battery operated, Green Ticker™. Mechanical Bottle Filler Button activation. Product shall be Built-in, for Indoor applications, serving 1 station(s). Unit shall be certified to UL 399 and CAN/CSA C22.2 No. 120.

Special Features:	Chilled Water, Filtered, Mechanically Activated, Total PFAS + Lead Filter, Laminar Flow, battery operated, Green Ticker™
Finish:	Midnight Black (M)
Power:	115V/60Hz
Activation by:	Mechanical Bottle Filler Button
Mounting Type:	Built-in
Chilling Capacity⁺:	1.5 GPH
Approx. Shipping Weight:	72 lbs.
Installation Location:	Indoor
No. of Stations Served:	1
⁺Based on 80° F inlet water & 90° F ambient air temp for 50° F chilled drinking water.	

- Mechanically-Activated unit continues to supply water in event of service disruptions.
- Standard Filter Included: Filter is tested and certified to NSF/ANSI 42, 53, 372 and 401 for the reduction of lead, microplastics, Class 1 particulate, cysts, and chlorine taste and odor. 3,000 gallon capacity or 1 year after installation.
- PFOA/PFOS Filter Included: Filter is tested and certified to NSF/ANSI 42, 53, 372 and 401 for the reduction of PFOA and PFOS (two prevalent PFAS chemicals), lead, microplastics, Class 1 particulate, cysts, and chlorine taste and odor. 2,250 gallon capacity or 1 year after installation.
- Green Ticker: Informs user of number of 20 oz. plastic water bottles saved from waste.
- Laminar flow provides clean fill with minimal splash.

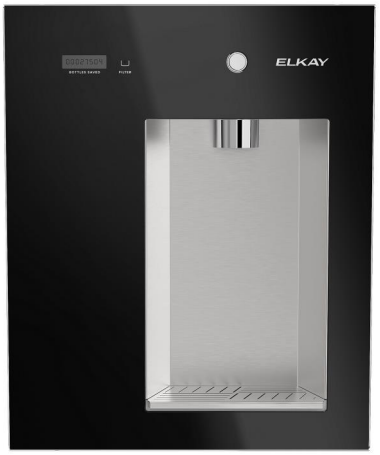

Included with Product: **Water Dispenser, 1.5 GPH Water Chiller ERS11Y, 2250 Gal Filter**

Ships in one box.

A Century of Tradition and Quality.
For more than 100 years, Elkay has been making innovative products and providing exceptional customer care. We take pride in offering plumbing products that make life easier, inspire change and leave the world a better place.

KBB PRODUCT AWARDS 2025 WINNER

PRODUCT COMPLIANCE

ADA & ICC A117.1
CAN/CSA C22.2 No. 120
NSF/ANSI 42, 53, 61 (Q≤1), 372 (lead free), & 401
UL 399

Complies with ADA & ICC A117.1 accessibility requirements when installed according to the requirements outlined in these standards. Installation may require additional components and/or construction features to be fully compliant. Consult the local Authority Having Jurisdiction if necessary.

Installation Instructions (PDF) - 2000002254

Electrical components and water system are warranted for 12 months from date of installation. **Warranty pertains to drinking water applications only. Non-drinking water applications are not covered under warranty.**

Warranty (PDF)

PART:_____QTY: _____
PROJECT:_____
CONTACT:_____
DATE:_____
NOTES:_____
APPROVAL:_____

COOLING SYSTEM

- Compressor: Hermetically-sealed, reciprocating type,

In keeping with our policy of continuing product improvement, Elkay reserves the right to change product specifications without notice. Please visit elkay.com for the most current version of Elkay product specification sheets. This specification describes an Elkay product with design, quality, and functional benefits to the user. When making a comparison of other producers' offerings, be certain these features are not overlooked.

single phase. Sealed-in lifetime lubrication.
- Condenser: Fan cooled, copper tube with aluminum fins. Fan motor is permanently lubricated.
- Cooling Unit: Combination tube-tank type. Continuous copper tubing with is fully insulated with EPS foam that meets UL requirements for self-extinguishing material.
- Refrigerant Control: Refrigerant R-134a is controlled by accurately calibrated capillary tube.
- Temperature Control: Easily accessible enclosed adjustable thermostat is factory preset. Requires no adjustment other than for altitude requirements.

Optional Accessories		
71300C	WaterSentry® PFOA/PFOS (PFAS) + Lead + Microplastics NSF/ANSI Certified 2250 Gal 12 Month Filter Spec Sheet (PDF)	
PM3	On-wall Chiller Shelf for Use With 1 or 5 or 10 GPH Chillers Spec Sheet (PDF)	

In keeping with our policy of continuing product improvement, Elkay reserves the right to change product specifications without notice. Please visit elkay.com for the most current version of Elkay product specification sheets. This specification describes an Elkay product with design, quality, and functional benefits to the user. When making a comparison of other producers' offerings, be certain these features are not overlooked.

IMPORTANT!
INSTALLER PLEASE NOTE :

This water cooler has been designed and built to provide water to the user which has not been altered by materials in the cooler waterways. The grounding of electrical equipment such as telephone, computer, etc. to water lines is a common procedure. The grounding may be in the building but may also occur away from the building. This grounding can cause electrical feedback into a water cooler creating an electrolysis which creates a metallic taste or causes an increase in the metal content of the water. This condition is avoidable by installing the cooler using the proper materials as shown below.

NOTICE

This built in water dispenser must be connected to the water supply using a dielectric coupling. The filter is furnished with a non-metallic ball valve which meets this requirement. The drain trap which is provided by the installer should also be plastic to completely isolate the cooler from the building plumbing system.
These products are designed to operate on 40 psi to 105 psi supply line pressure.

OPERATION OF QUICK CONNECT FITTINGS

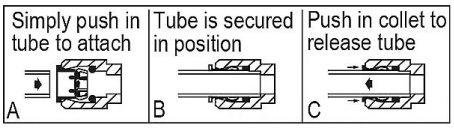

Pushing tube in before pulling it out helps to release tube

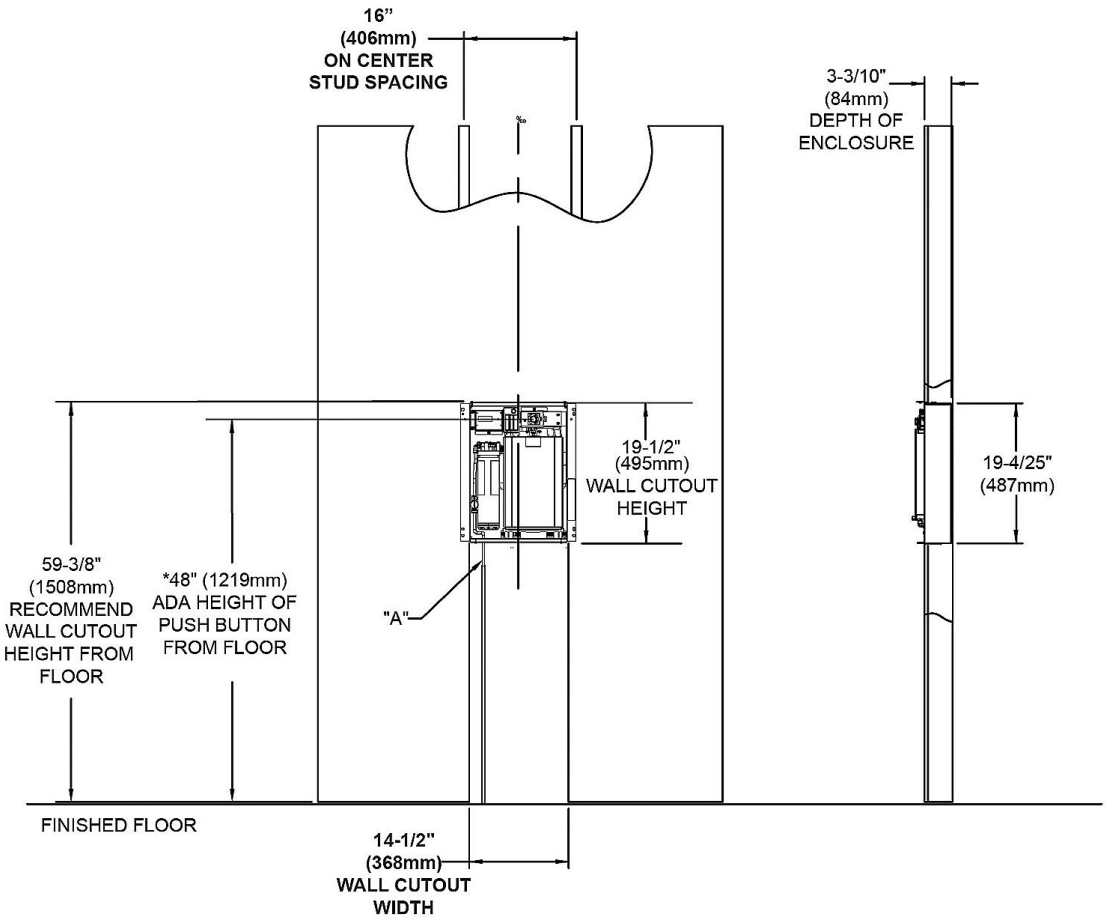

LEGEND:
A = Recommended location for 3/8" (10mm) water inlet, to connect with 3/8" (10mm) shut off valve in filter box.
*Height to top of wall cutout will need to be less than the recommended 59-3/8" (1508mm) height to meet the ADA requirement for the push button location of 48" (1219mm).

In keeping with our policy of continuing product improvement, Elkay reserves the right to change product specifications without notice. Please visit elkay.com for the most current version of Elkay product specification sheets. This specification describes an Elkay product with design, quality, and functional benefits to the user. When making a comparison of other producers' offerings, be certain these features are not overlooked.

Operating Pressures:
Supply water - recommended water pressure range is 40-105 psi

NOTE: A service stop (not included) should be installed at the chiller inlet line.

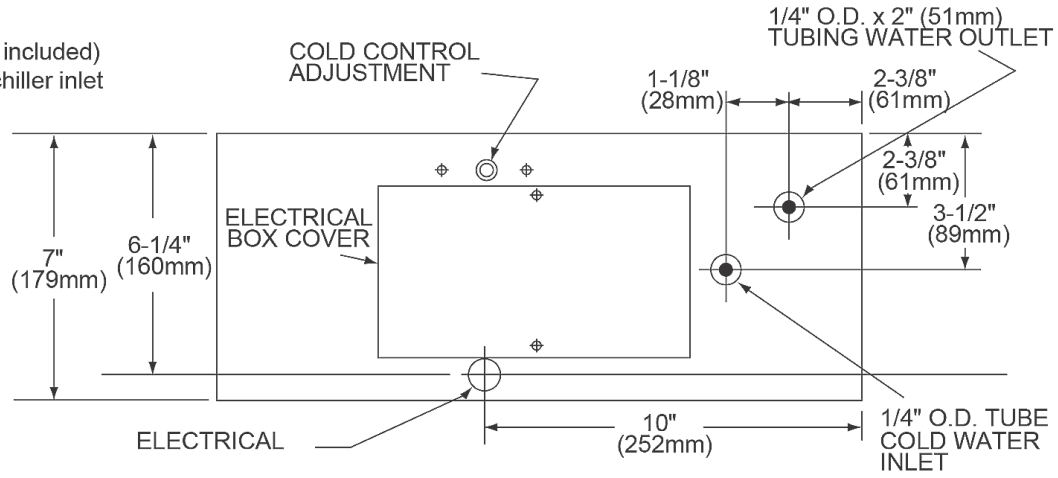

TOP VIEW

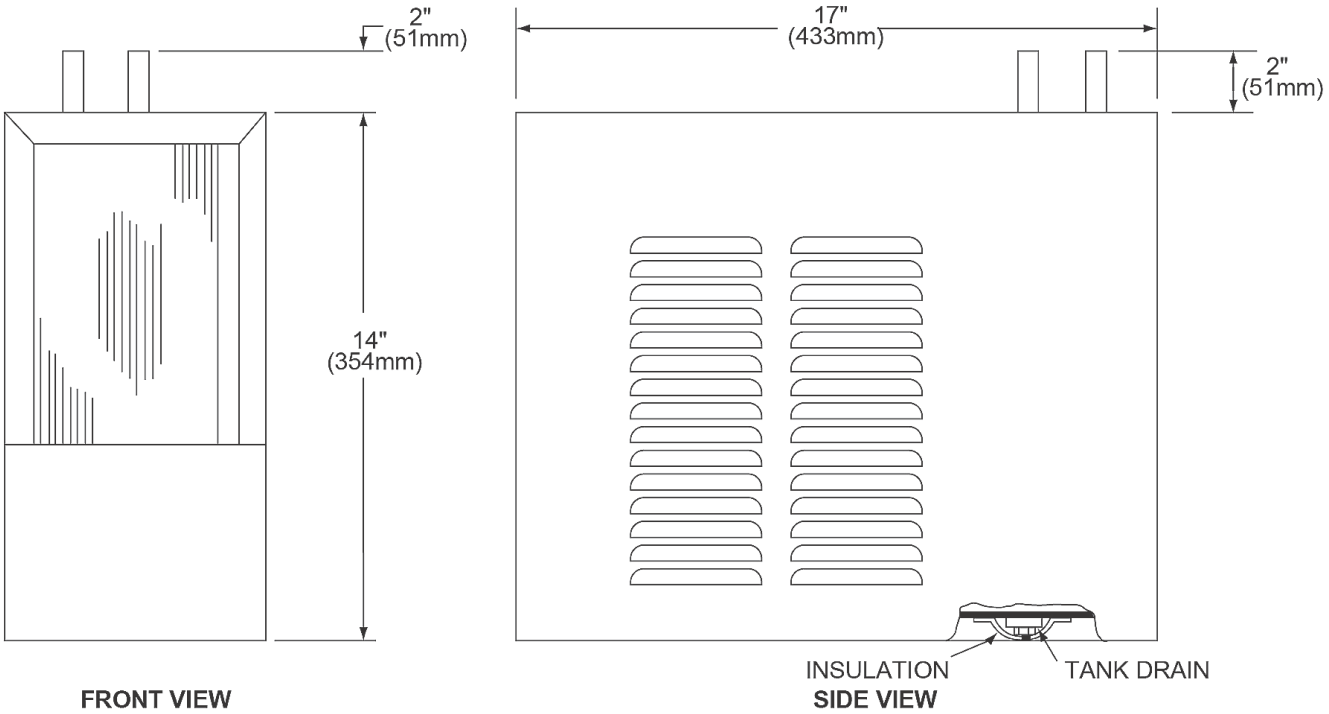

FRONT VIEW **SIDE VIEW**

NOTE: It is important to insure proper ventilation. If this remote chiller is physically placed against barrier or in enclosure of any kind, 4" (102mm) air space must be allowed on all sides.

In keeping with our policy of continuing product improvement, Elkay reserves the right to change product specifications without notice. Please visit elkay.com for the most current version of Elkay product specification sheets. This specification describes an Elkay product with design, quality, and functional benefits to the user. When making a comparison of other producers' offerings, be certain these features are not overlooked.