INSTALLATION GUIDE FOR ASH3809B and ASH3809B1

SAFETY INFORMATION

Released Date: 2020-12-09

Please read and understand this entire manual before attempting to assemble, install or operate the product.

WARNING

- RISK OF ELECTRIC SHOCK - Before beginning installation, turn off electricity at the circuit breaker box or the main fuse box.
- RISK OF FIRE - Use bulbs specified by the markings and/or labels on the fixture.

CAUTION

- For your safety, read instructions completely before beginning installation.
- If in doubt about electrical installation, consult a licensed electrician.
- Turn off electricity to fixture before replacing the bulb(s).

TOOLS REQUIRED

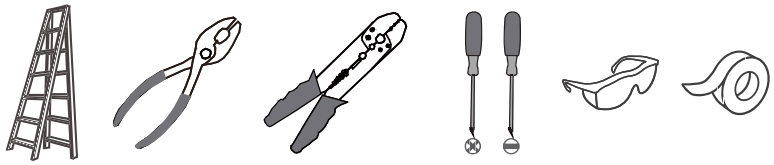

CARE AND MAINTENANCE

- Wipe clean using soft, dry cloth or static duster. Always avoid using harsh chemicals and abrasives to clean fixture as they may damage the finish.

If you need further assistance email customercare@ashleyharbour.com.

PACKAGE CONTENTS

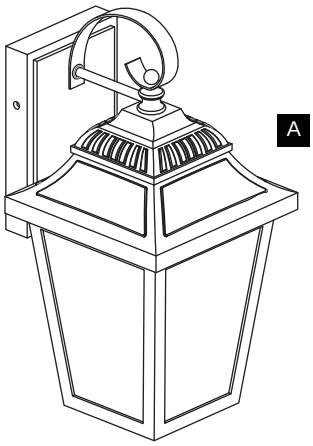

A Fixture Body x 1

MOUNTING HARDWARE

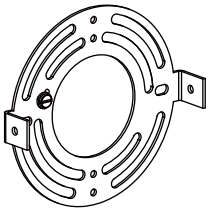

AA Inner Backplate x 1

BB Mounting Screw x 2

CC Wire Connector x 3

DD Outlet Box Screw x 2

INSTALLATION

1 Install Inner Backplate

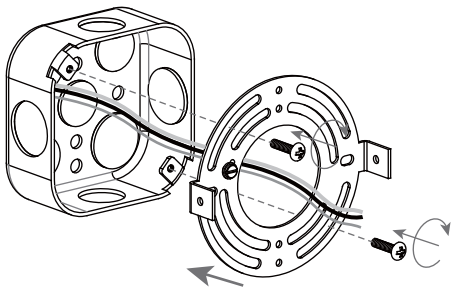

2 Wiring

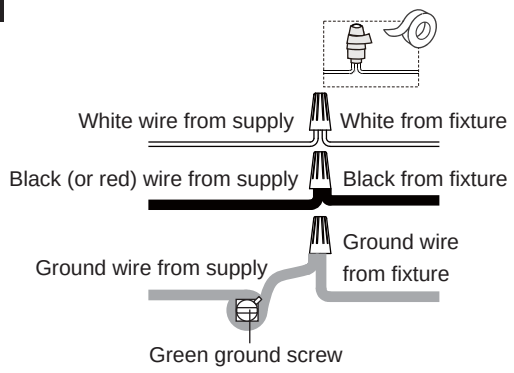

3 Install Fixture Body

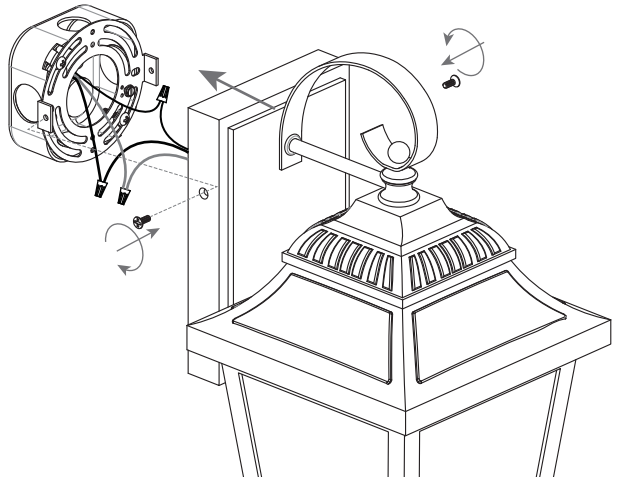

4 Install Bulb

Install one correct bulb referring to fixture markings and/or labels for maximum wattage.

Recommended Bulb type (not included):

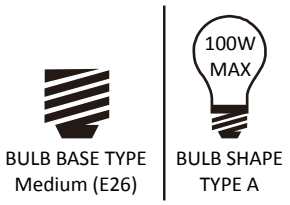

5 Apply Caulking (Backplate shape is varies depends on items purchased)

***Note:** **Do NOT caulk the bottom of the backplate to allow moisture to escape.**

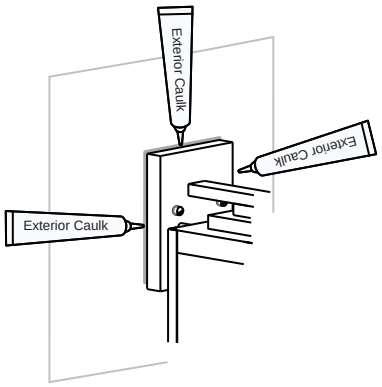

Rectangle/Square Backplate

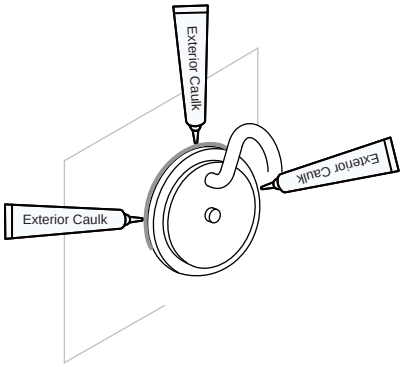

Round Backplate

Your installation is now complete! Restore electricity and save this sheet for future reference.

HOW TO REPLACE GLASS PANEL

1 **Remove Cage**

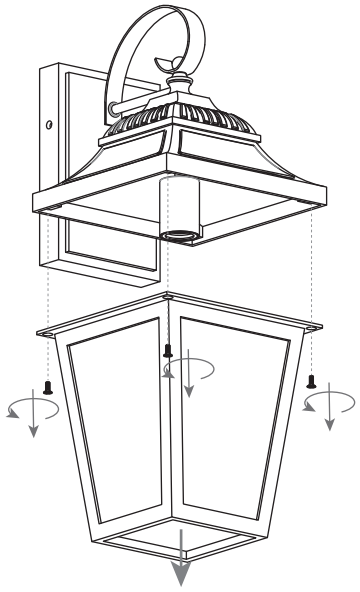

2 **Remove Glass Holder**

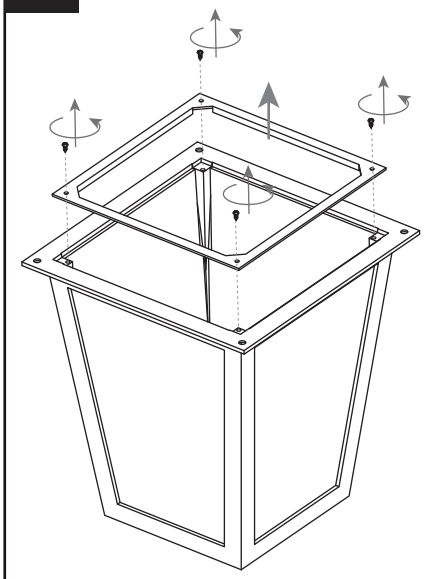

3 **Remove Glass Panel**

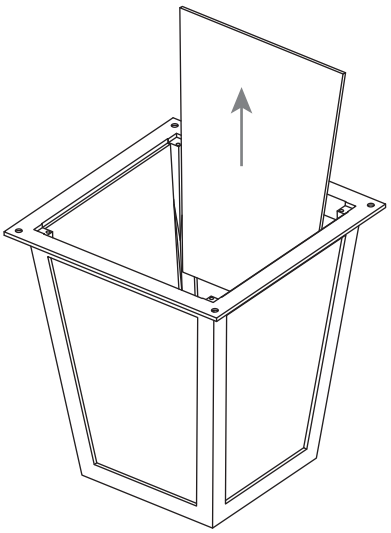

4 **Install New Glass Panel**

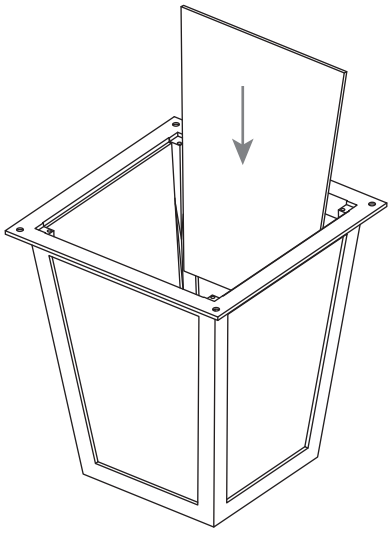

5 **Install Glass Holder**

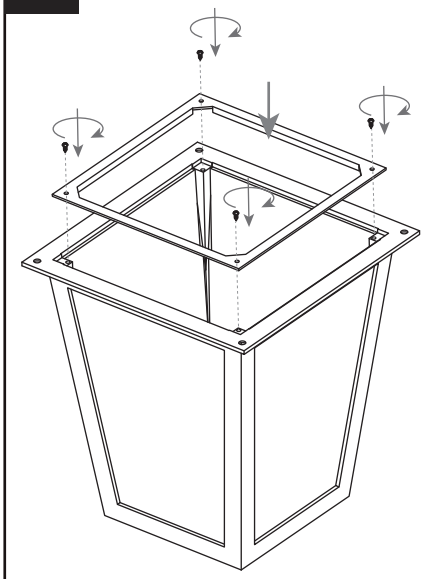
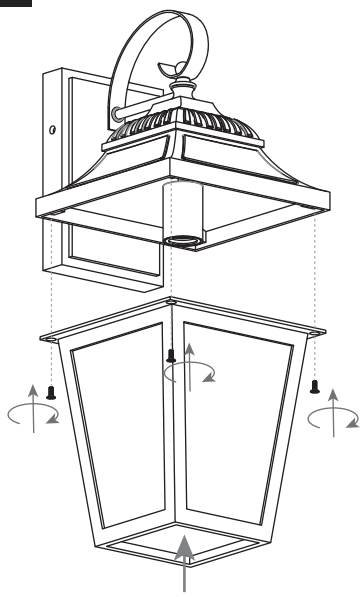
6 **Install Cage**