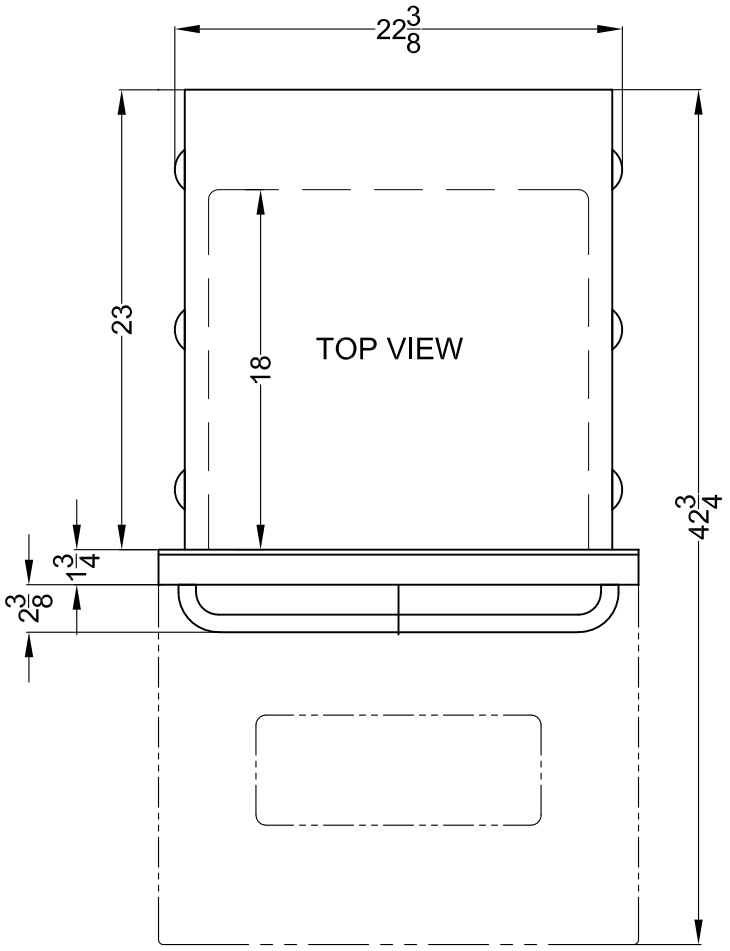

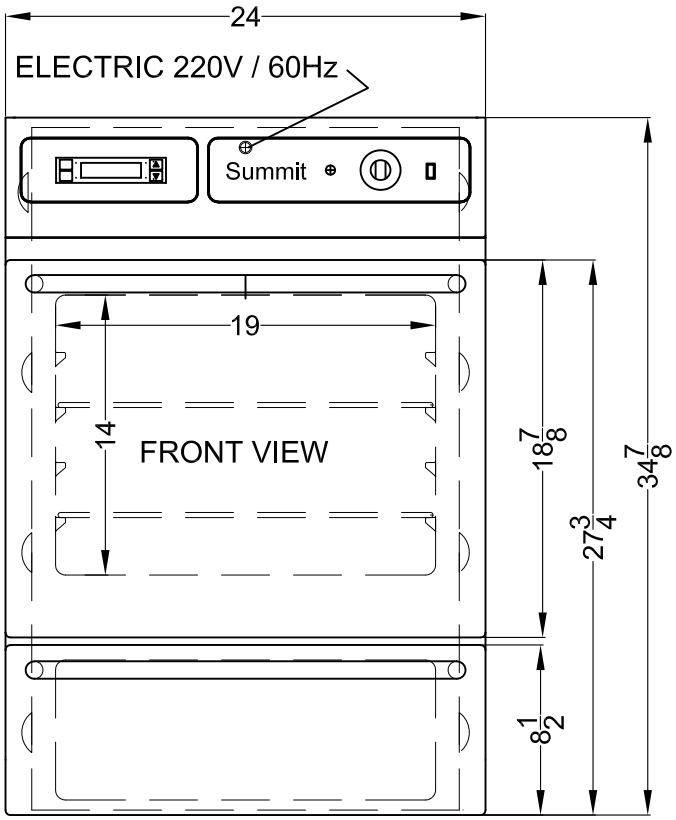

MODEL NO. TEM721BKW

TYPE:
ELECTROIC WALLOVEN

SUMMIT

FELIX STORCH, INC.
www.summitappliance.com
718-893-3900

DATE: AUG./04/2021