EUHOMY

Ice Maker

Instruction Manual

SKU: IM-18S-AZ-HM

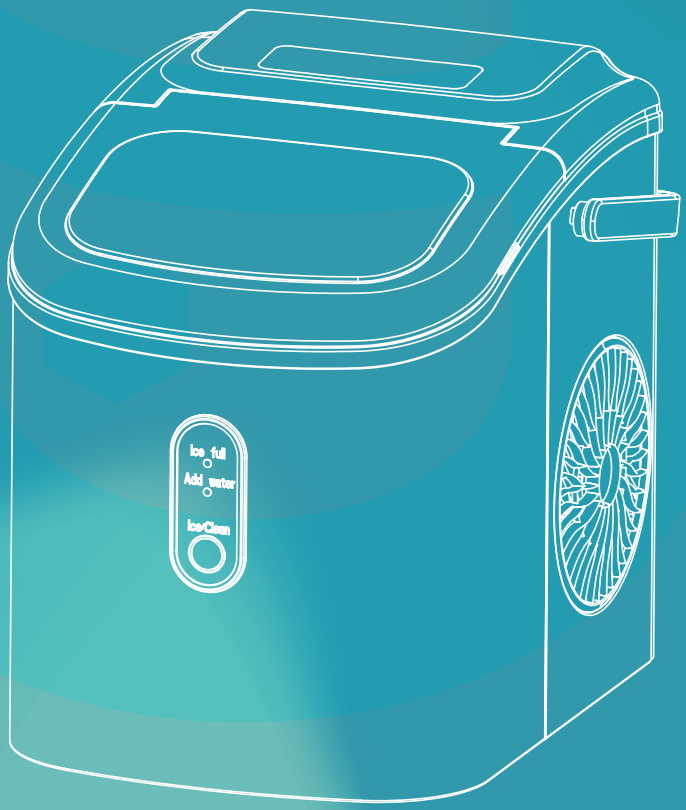

Email: support@euhomy.com

Facebook: @Euhomy.Official

Congratulations

Dear Customer:

Welcome to the our family. Thank you for purchasing one of our products.

Our goal is to provide you with superior service. If there is anything missing from or wrong with your order, or if you have any questions about using our product, PLEASE contact us.

Email: support@homyd.com

Our team is available 24/7 to address your questions, comments, and concerns. Your satisfaction is our ultimate goal. We want to make everything right so you'll share your positive experience with other shoppers.

If you experience any problems, please send an email to

support@homyd.com

Our mission:
* To be the most trusted appliance brand.
* To create practical, compact appliances that better your life.

Q&A

1. How often do I need to clean my ice maker?

It depends on your usage habits. If you use the ice maker often, it is recommended that you clean it at least once a week. Failure to clean the machine will cause scale accumulation, which will eventually block the pump and cause the product to stop working.

2. How should I clean the machine?

It is recommended to use lemon water or a solution of low-acid vinegar and water for cleaning. Drain the machine immediately after cleaning and then rinse it with pure water.
It is recommended to drain the water tank at least once every three days. This keeps the hardness of the water low, ensures that impurities can be discharged, and prevents scale buildup in the water tank.

3. Why are my ice cubes cloudy?

It means that your water quality is turbid. It is recommended to use only drinking water and distilled water. If your water quality problem is serious, it is recommended that you install a water filtration system on your faucet.

4. Can I put milk and juice into the water tank to make ice cubes?

Using liquids other than water to make ice cubes is not recommended. Our research has found that the particles in milk and beverages can easily block the pump and reduce the life of the pump. Also, the protein in milk is prone to calcification, which chemically reacts with the PU water pipe inside the machine and easily breaks it, making the product unable to continue working.

5. Why do my ice cubes melt easily?

Because the ice maker is not a refrigerator, it does not have a heat-control function. High ambient temperatures in summer will accelerate the melting of ice cubes. You can close the lid of the machine to maintain the internal temperature. Some users put electric fans by the machine to blow away hot air, which you can also try. However, if you are not going to use the ice cubes for a long time, we recommend removing them from the ice basket and storing them in your freezer.

6. Why do my ice cubes stick together?

Either the room temperature or the water temperature is too low. You can add water to increase the temperature of the water in the tank. If this does not work, then the evaporator may have sagged and become deformed. It is recommended that you push up the cubes with your hand.

7. Why do the ice cubes I made smell of plastic?

The ice cubes themselves have no taste. If they smell of plastic, first try to clean the inside of the machine with lemon water. Then run a few ice-making cycles and discard the ice cubes made. Finally, rinse the machine with distilled water.

8. Why does my machine make noise when it is running?

The machine will make a faint sound when it is running. Closing the lid can reduce the noise. If the water pump makes noise during use, it is recommended to turn off the machine first. Then turn on the machine after cleaning the filter in the water tank to see whether the noise disappears.

9. Why is water leaking from my machine?

It may be that the tube inside the machine fell off during transport. You can remove the back cover of the machine and reconnect the tube yourself. If you do not know how to do this, please contact our team. We will refer you to a professional video to help you solve the problem.

10. Why is there water flowing but not making ice?

If the ambient temperature and refrigeration pipe are OK, then the refrigerant in the machine has leaked. Please send us a video or picture, and our team will help you.

11. Why the ice making is not big?

When the ambient temperature or the initial water temperature is too high or the machine's evaporator column deformation will lead to the production of ice is not large enough.It is recommended to continue to wait for the machine to make a few more rounds of ice, or add the water temperature of the tank is not too high, and then the deformed evaporator column will be manually pulled down to restore its original state.

Contents

Safety Precautions	2-4
Unit Construction & Operation	5-8
Maintenance & Tips	9-11
Technical Parameters & Circuit Diagram	12
Warranty	13
Troubleshooting	14

Safety Precautions

Important Safety Instructions / For Household Use Only

Your safety and the safety of others are very important.

- We have provided many important safety messages in this manual and on your appliance.
- Always read and obey all safety messages.
- This is the safety alert symbol:

All safety messages are preceded by the safety alert symbol and the word "DANGER" or "WARNING".

DANGER:

WARNING:

These words mean:
You can be killed or seriously injured if you don't immediately follow the instructions.
All safety messages will tell you:

- What the potential hazard is.
- How to reduce the chance of injury.
- What can happen if the instructions are not followed.

Safety Precautions

When using electrical appliances, basic safety precautions should be followed to reduce the risk of fire, electric shock, and injury to persons or property. Read all instructions before using any appliance.

- Do not operate this or any other appliance with a damaged cord. If the supply cord is damaged, it must be replaced by the manufacturer, its service agent, or a similarly qualified person in order to prevent a hazard. This ice maker must be positioned so that the plug is accessible.
- Do not run the power cord over carpeting or other heat insulators. Do not cover the cord. Keep the cord away from traffic areas. Do not submerge the cord in water.
- We do not recommend the use of an extension cord, as it may overheat and become a fire hazard. If you must use an extension cord, use a size 14AWG at minimum, rated no less than 1875 watts.
- Unplug the ice maker before cleaning, repairing, or servicing.
- Exercise caution and provide reasonable supervision when using the appliance near children.
- Do not use your ice maker outdoors. Place the ice maker out of direct sunlight. Be sure that there is at least 6 inches of space between the back of the unit and the wall. Keep a minimum distance of 6 inches on each side of your unit free.
- Do not use liquids other than water to make ice cubes.
- Do not clean your ice maker with flammable fluids. The fumes can create a fire hazard or explosion.
- Do not tip the unit over.
- If the ice maker has been in a cold environment, give it a few hours to warm up to room temperature before plugging it in.

Safety Precautions

⚠ WARNING: This appliance must be grounded.

- DANGER: Risk of Fire or Explosion. Flammable Refrigerant Used.
  Do Not Use Mechanical Devices to Defrost Ice Maker. Do Not Puncture Refrigerant Tubing.

- DANGER: Risk of Fire or Explosion. Flammable Refrigerant Used. To Be Repaired Only by Trained Service Personnel. Do Not Puncture Refrigerant Tubing.

- CAUTION: – Risk oOf Fire oOr Explosion. Flammable Refrigerant Used. Consult Repair Manual/Owner's Guide Before Attempting tTo Install or Service This Product. All Safety Precautions Must Bbe Followed.

- CAUTION: Risk of Fire or Explosion. Dispose of Property in Accordance With Federal or Local Regulations. Flammable Refrigerant Used.

- CAUTION: Risk of Fire or Explosion Due to Puncture of Refrigerant Tubing. Follow Handling Instructions Carefully. Flammable Refrigerant Used.

- The ice maker should be installed in accordance with the safety standard for refrigeration systems, ASHRAE15. The ice maker shall not be installed in corridors or hallways of public buildings.

- If the unit needs maintenance or repairs, the service shall be performed by factory-authorized service personnel with like parts to minimize the risk of possible ignition due to incorrect parts or improper service.

⚠ Note:

The wires in the power cord are colored in accordance with the following code:

COLOR	WIRING
Green, or green with a yellow stripe	Grounding
White	Neutral
Black	Live

To prevent a hazard due to instability of the appliance, it must be placed on a flat, even surface.

I Unit Construction & Operation

General instructions

1. Ice scoop.
2. Ice full sensor
3. Ice basket
4. Top cover with transparent window
5. Air exhausting
6. Water drain cap: at the front bottom side of the unit.
7. MAXIMUM WATER LEVEL: ——▲——
   Remove the ice basket to see the water level mark.
8. Handle.

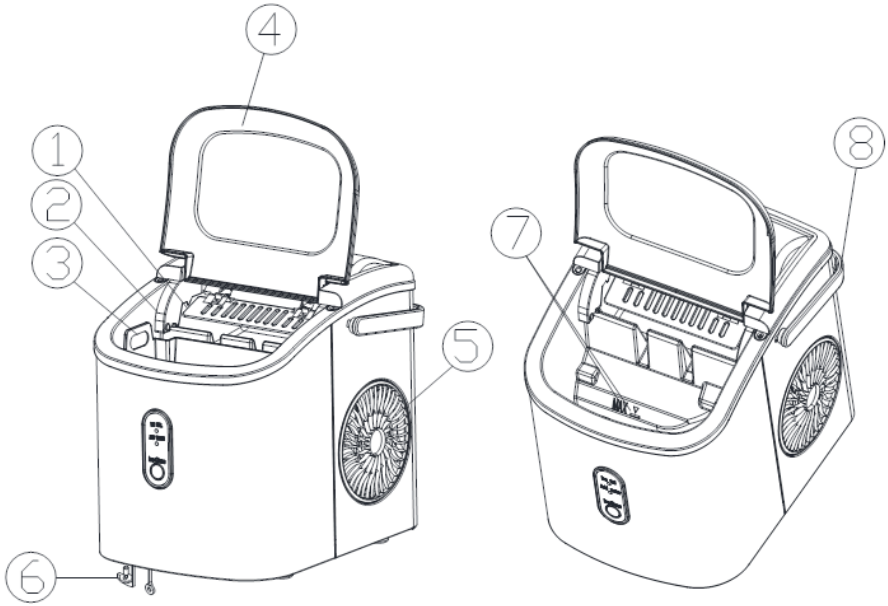

EUHOMY
Live the cool life

Unit Construction & Operation

Position of control panel and function

Control Panel: Easy to use, visible functions touch display setting.
A. Button to turn Ice/Clean the unit.
B. Water shortage indicator
C. Ice-Full indicato

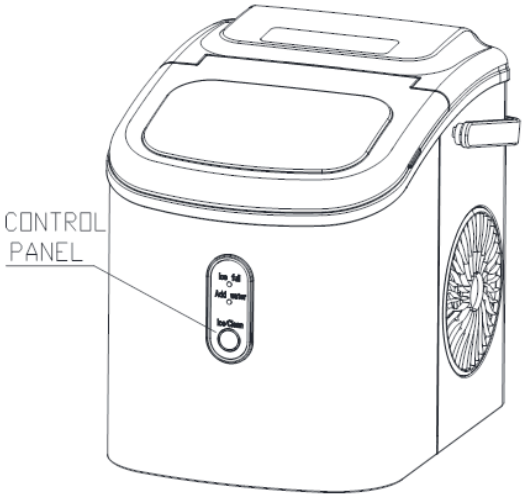

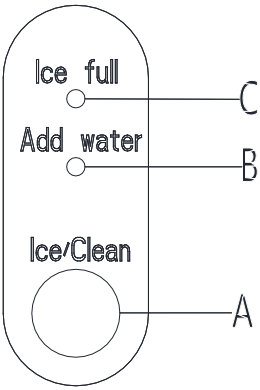

AUTOMATIC SELF-CLEANING PROGRAM

Plug in the unit; press the ICE/CLEAN button on the control panel for more than 5 seconds to enter the self-cleaning program, which runs for 30 minutes. During cleaning, the red and white lights around the button will flash in turn. After cleaning, drain the water from the inner tank through the drainage outlet at the bottom of the machine.

Unit Construction & Operation

Rotate the handle to the same angle as the mounting hole on the machin,Put It on the machine.

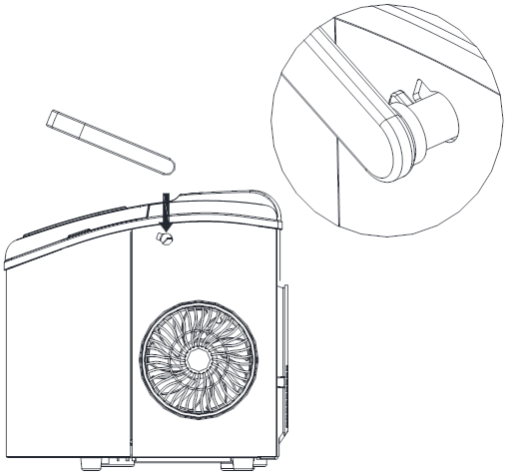

DANGER

***Improper use of the grounded plug can result in the risk of electrical shock, If the power-cord is damaged, please call our customer service.**

1. This unit should be properly grounded for your safety. The power cord of this appliance is equipped witha grounding plug which mates with standard grounding wall outlets to minimize the possibility of electric
shock.
2. Plug your appliance into an exclusive, properly installed, grounding wall outlet. Do not under anycir-cumstances; damage the grounding means of the plug. Any questions concerning power and/orgrounding should be directed toward a certified electrician.
3. This appliance regquires a standard 110-120Volt, 60Hz electrical outlet with good grounding means.

Before using your ice maker, it is strongly recommended to clean it thoroughly. Unplug theunit before cleaning or making any maintenance.

1. Take out the ice basket.
2. Clean the interior with diluted detergent, warm water and a soft cloth.
3. Then use the water to rinse the inside parts, and drain out the water by unplugging the drain cap onfront bottom side.
4. The outside of the ice maker should be cleaned regularly with a mild detergent solution and warm water.
5. Dry the interior and exterior with a clean soft cloth.
6. When the machine is not to be used for a long time, drain water completely & dry the interior.

USING YOUR ICE MAKER

1.Open the cover, remove the ice basket, and pour water into the tank.
Keep the water level below the water level mark.

2.Press the "on/off" button on the control panel to begin the ice-making cycle.

3.The ice-making cycle lasts approx. 6 to 13 minutes, depending on the ice cube size selected and the room temperature. The recommended room temperature is 50℉ to 105 ℉

4.If the water pump can't inject water, the ice maker will stop automatically, and the "ADD WATER" indicator will be on. Press the "on/off" button, and fill with water up to the max. water level mark, and press the "on/off" button again to turn on the unit again. Allow the refrigerant liquid inside the compressor at least 3 minutes to settle before restarting.

5.The ice maker stops when the ice basket is full and the "ICE FULL" indicator will be on.
Warning: Direct sunlight or sunlight reflection may cause infrared sensor malfunction. If the unit doesn't stop, or ice cubes obstruct the sensor, move the unit away from sunlight.

6.Change water in the water reservoir every 24 hours to ensure a reasonable hygiene level.
If the unit will not be used, drain out all the water and dry the tank.

Maintenance & Tips

MAINTAINING YOUR ICE MAKER

- Remove the exterior and interior packaging. Check that all the accessories are included. If any parts are missing, please contact our customer service department.
- Remove all the tape on the unit. Take out the accessory parts inside.
- Clean the interior with lukewarm water and a soft cloth.
- Place your ice maker on a level countertop or table, out of direct sunlight and far from other sources of heat (e.g., stove, furnace, or radiator). Be sure that there is at least 6 inches between the back and sides of your ice maker and any walls or other appliances.
- Allow 1 hour for the refrigerant fluid to settle before plugging your ice maker in.
- The power plug must be accessible.

⚠ NOTE:

WARNING: Fill with potable/drinking water only.

DANGER

Improper use of the grounded plug can result in electrical shock. If the power cord is damaged, please call our customer service department.

- This unit should be properly grounded for your safety. The power cord of this appliance is equipped with a grounding plug, which mates with standard grounded wall outlets to minimize the risk of electric shock.
- Plug your appliance into an exclusive, properly installed, grounded wall outlet. Do not, under any circumstances, damage the grounding prong of the plug. Any questions concerning power and/or grounding should be directed to a certified electrician.
- This appliance requires a standard 110–120 V, 60 Hz electrical outlet with good grounding.

MAINTAINING YOUR ICE MAKER

DANGER

Before using your ice maker, it is strongly recommended to clean it thoroughly.
Unplug the unit before cleaning or maintaining it.

- Take out the ice basket.
- Clean the interior with diluted detergent, warm water, and a soft cloth.
- Rinse the interior with clean water.
- Drain out the water by unplugging the drain cap at bottom front.
- Clean the exterior of the ice maker regularly with a mild detergent solution and warm water.
- Dry the interior and exterior with a clean, soft cloth.

When the machine is not to be used for a long time, drain out the water completely and dry the interior.

Maintenance & Tips

⚠ Note:

Do not use organic solvents, boiled water, detergent, strong acids, strong alkali, or other harsh substances for cleaning. Please empty the water tank and dry it before storing the ice maker if it will not be used for a long time.

CORRECT DISPOSAL OF THIS PRODUCT

	When the unit is taken out of service, disposal of this unit and its materials shall be in accordance with national regulations.

Technical Parameters & Circuit Diagram

Model	IM-18S
Protection Type	I
Power	115V/60Hz
Ice Making Current	1.5A
Ice Harvest Current	1.8A
Refrigerant	R600a 0.74Oz/21g
Design Pressure	
High Side	290Psig
Low Side	88Psig
Vesicant	C_5H_{10}
Net Weight	6.4Kg
Dimension (W * D *H)	222x294x290mm
Enclosure	Stainless

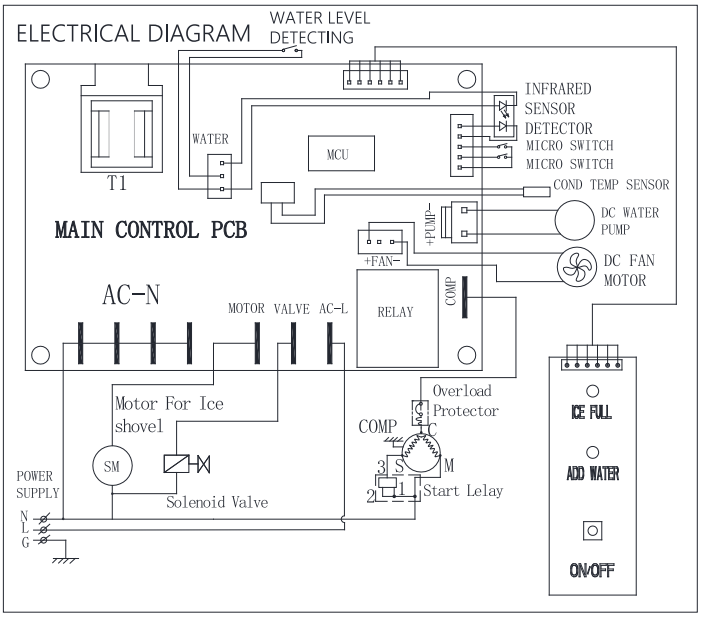

Warranty and Service

We offers a limited 1-year warranty ("warranty period") on all of our products purchased new and unused from us with an original proof of purchase and where a defect has arisen, wholly or substantially, as a result of faulty manufacture, parts, or workmanship during the warranty period. The warranty does not apply where damage is caused by other factors, including without limitation:

(a) normal wear and tear;

(b) abuse, mishandling, accident, or failure to follow operating instructions;

(c) exposure to liquid or infiltration of foreign particles;

(d) servicing or modifications of the product other than by our company;

Our warranty covers all costs related to restoring the proven defective product through repair or replacement of any defective part and necessary labor so that it conforms to its original specifications.
Areplacement product may be provided instead of repairing a defective product. Our sole obligation underthis warranty is limited to such repair or replacement.
A receipt indicating the purchase date is required forany claim, so please keep all receipts in a safe place.
Although greatly appreciated, the product registrationis not required to activate any warranty, and product registration does not eliminate the need for the original proof of purchase.
The warranty will be voided if repairs are performed by a non-authorized thirdparty and/or if spare parts other than those provided by the Company are used.
You may also arrange forservice after the warranty expires, at an additional cost.
These are our general terms for warranty service,but we always urge our customers to reach out to us with any issue, regardless of warranty terms.
If youhave an issue with our products, please contact us, and we will doour best to resolve it for you.

Troubleshooting

Problem	Possible cause(s)	Solution
ADD WATER indicator turns on	Lack of water.	Stop the ice maker,fill water, and press"ICE/CLEAN" button again torestart the unit.
ICE FULL indicator turns on	There is too much ice.	Remove any ice cubes.
	Blockage or contamination.	Remove any obstacles from inside or clean the inside of the ice-storage compartment.
Ring indicator light flashes red	Ambient temperature or water temperature in inner tank is too high.	Please ruRun the ice maker in an ambient temperature below 90 ° F. Pahrenheit degree ambient and pour colder water into tank.
	Refrigerant liquid leakage.	Press the "ICE/CLEAN" button twice, restart ice making program, if this problem show up again, Please contact support@homyd.com
	Cover motor is broken.	
	Pipe in the cooling system is blocked.	
Ice-making is too slow	Hot air vent is blocked.	Hot air vent must be more than 6 inches away from other objects or walls.
	Water temperature in inner tank is too high.	Water temperature requirement must be between 44.6°F-89.6°F.
	Refrigeration system has malfunctioned.	Please contact support@homyd.com
Water leakage	Drain plug is not in place.	Put the drain plug in place.
	Pipe joint in the appliance is loose.	Please contact support@homyd.com
	The seal has reached the end of its service life.	Please contact support@homyd.com

EUHOMY

Live the *cool life*

Email: support@euhomy.com

Facebook: @Euhomy.Official