Farmington®
Bathroom Sink
K-2905-4

Features
- With overflow
- 4" (102 mm) centers
- Drop-in installation
- 19-1/4" (489 mm) x 16-1/4" (413 mm)

Material
- KOHLER® enameled cast iron.

Recommended Accessories
K-8998 P-Trap

ADA	CSA B651	OBC

Codes/Standards
ASME A112.19.1/CSA B45.2
All applicable US Federal and State material regulations
ADA
ICC/ANSI A117.1
CSA B651
OBC

Lifetime Limited Warranty for KOHLER® Cast Iron Components
See website for detailed warranty information.

Available Color/Finishes
Color tiles intended for reference only.

Color	Code	Description
	0	White
	FF	Sea Salt™
	96	Biscuit
	47	Almond
	FD	Cane Sugar™
	NY	Dune
	95	Ice™ Grey
	G9	Sandbar
	FT	Basalt
	KA	Black 'n Tan
	7	Black Black™

Farmington®

Bathroom Sink

K-2905-4

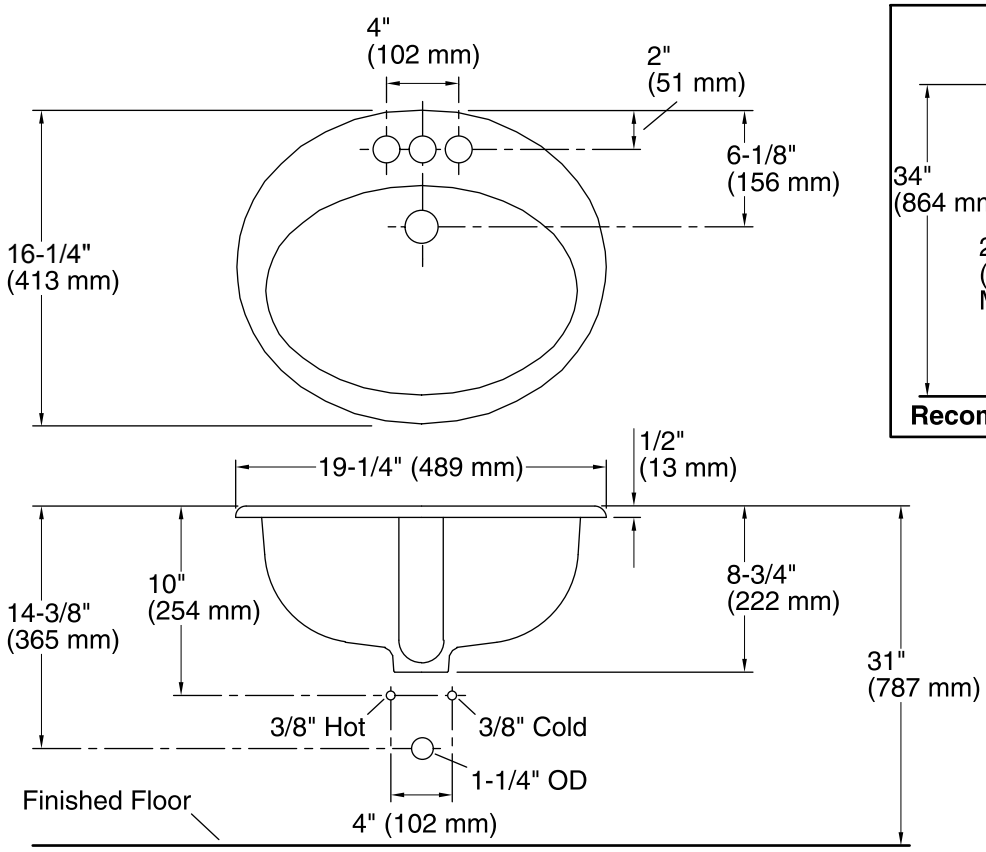

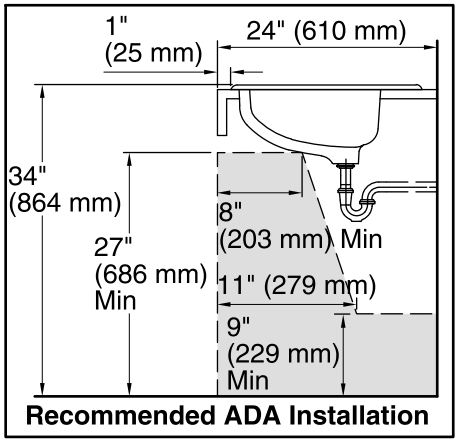

Recommended ADA Installation

Technical Information

All product dimensions are nominal.

Installation:	Drop-in
Bowl area:	Length: 16" (406 mm) Width: 11" (279 mm) Water depth: 5" (127 mm)
Number of deck holes:	3
Faucet hole(s):	1-3/8" (35 mm)
Drain hole:	1-11/16" (43 mm)
Template:	1002973-7, required, included

Notes

Install this product according to the installation instructions.

NOTICE: Countertop manufacturer or cutter must use the current product template available at www.kohler.com, or by calling 1-800-4KOHLER. Kohler Co. is not responsible for cutout errors when the incorrect cutout template is used.

ADA, OBC, CSA B651 compliant when installed to the specific requirements of these regulations.