TILE REDI®
BASE'N BENCH®

MODEL
RT3648RMBRB36KIT

(Not to scale)

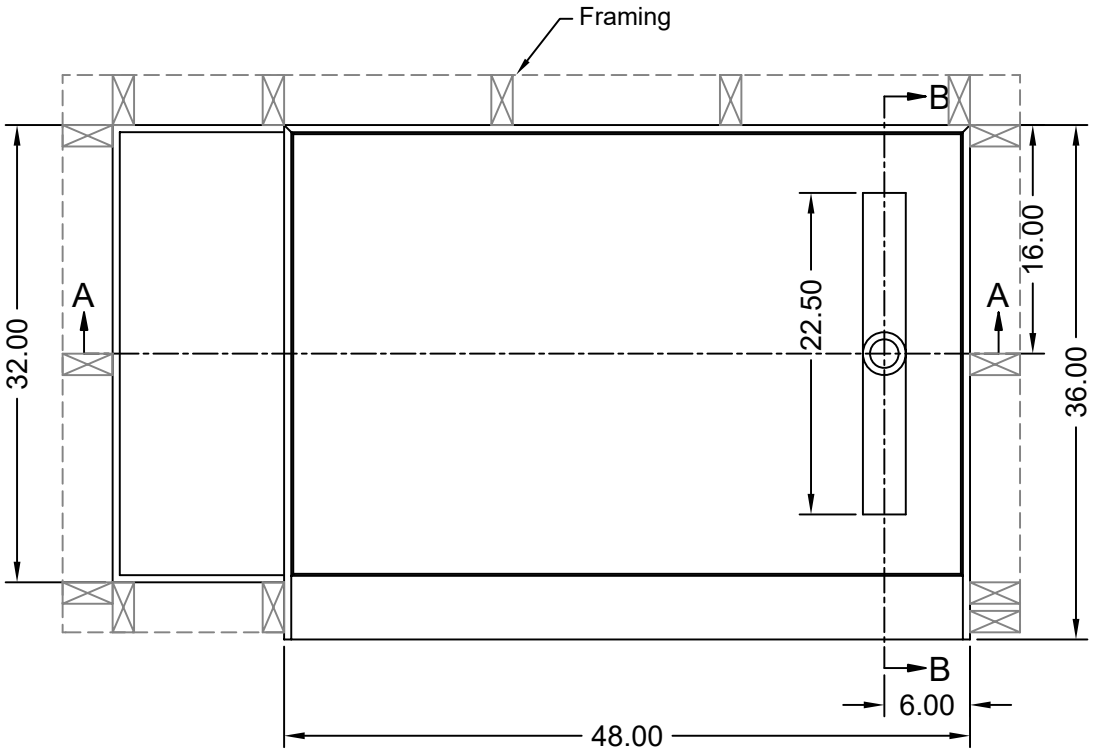

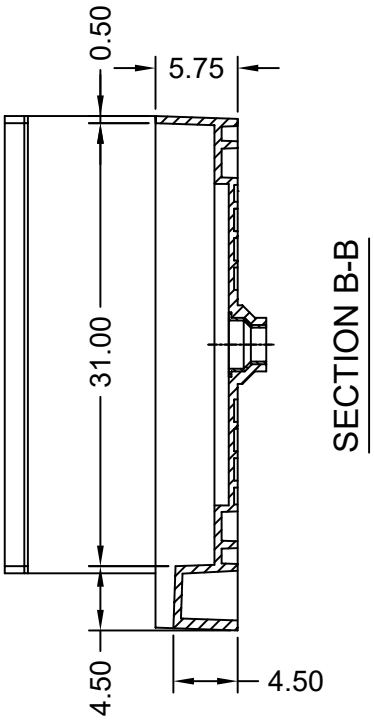

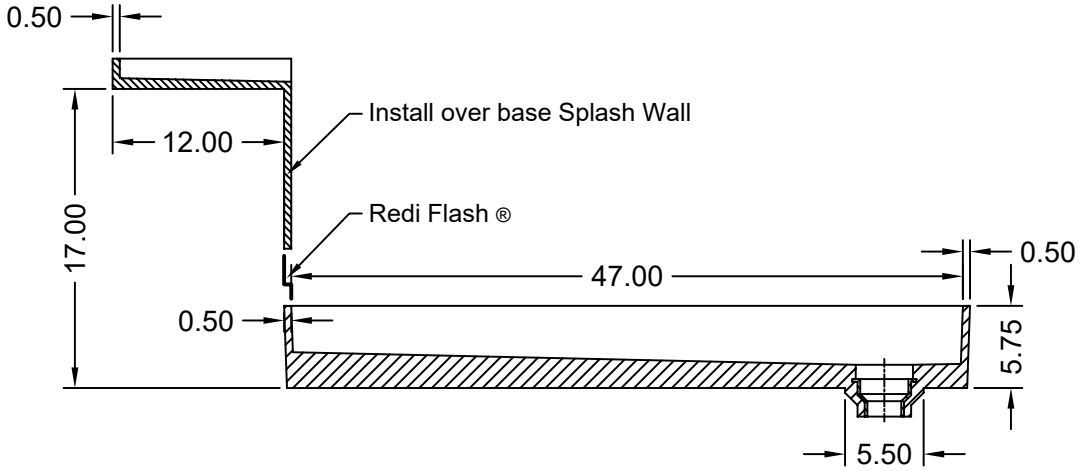

SECTION A-A

All dimensions are within tolerances of +/- 1/4" unless otherwise noted.

ANSI Z124.1-95 ASTM F462-79
ANSI Z124.2-95 B45.0-02
ICC/ANSI A117.1.98 B45.5-02

Toll Free: 800.232.6156 techsupport@tileredi.com
Tel: 954.323.0125
Fax: 954.344.8064 www.tileredi.com

2023.05.17

© 2023 TILE REDI USA, LLC