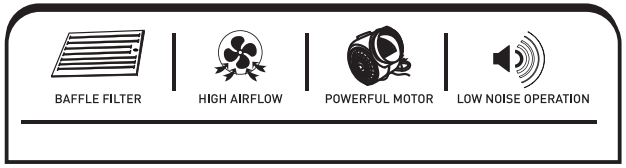

Contact your local seller for exchange or repair.
Visit: www.ekonkitchen.com for most updated information.
Email to support@ekonkitchen.com for technical support and sales activity.

Installation Guide & User Manual

Version: NAB01N-30-BG/NAB01N-30-WG/NAB01N-36-BG/NAB01N-36-WG

Built-In/Inserted Series Mount Range Hood

6'' Diameter Round Top Vent Only

RANGE HOOD

STOP and read! Test before installing

1. **Please unpack the range hood and accessories carefully.**
2. **Remove the aluminium filters, check any dent or damage inside and outside.**
3. **If found any loosing parts, please remove them.**
4. **Place the range hood on a flat stable surface, plug in 120V AC power source. Press the power button and the speed buttons to turn on.**
5. **Check if any unusual metal touching noise, check the speed variation, and press the Light button to check the lights.**
6. **Verify all functions per Section 9 RANGE HOOD OPERATIONS.**
7. **Refer to Section 10 TROUBLESHOOTING if any malfunction was found.**
8. **The plastic protective film was removed for sanding polish finishing.**

IMPORTANT:

Read and save these instructions.

NOTICE:

Installer: Leave this guide with the homeowner
Homeowner: Keep this guide for future reference

C ETL LISTED US
Intertek
5006321

NAB01N Series

Model No.: NAB01N-30-BG
NAB01N-30-WG
NAB01N-36-BG
NAB01N-36-WG

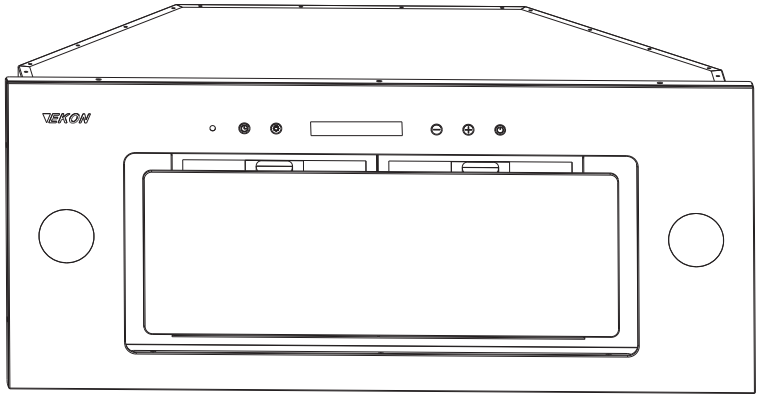

IMPORTANT READ THIS FIRST

READ BEFORE INSTALLATION

1. Carefully check all contents of packages.

2. Thoroughly inspect the unit for any shipping damages, cosmetic damages or defects.

3. Have a certified contractor/ electrician test the unit before installation.

IF THERE IS ANY PROBLEM:

1. **DO NOT INSTALL THE UNIT AND KEEP ALL ORIGINAL PACKAGING MATERIAL.**

2. Have your original invoice as proof of purchase and product serial number ready.

3. Contact your merchant for product replacement due to shipping damages, cosmetic damages or defects.

4. For all other issues, Email to support@ekonkitchen.com

IMPORTANT SAFEEY INSTRUCTIONS

- PLEASE READ THIS SECTION CAREFULLY BEFORE INSTALLATION -

⚠WARNING: TO REDUCE THE RISK OF FIRE,ELECTRIC SHOCK OR PERSONAL INJURY, OBSERVE THE FOLLOWING:

1) Installation and electrical wiring must be done by qualified professionals and in accordance with all applicable codes and standards, including fire-rated construction.
2) When cutting or drilling into wall or ceiling, be careful not to damage electrical wiring or other hidden utilities.
3) Ducted fans must be vented to the outside.
   a) Before servicing or cleaning unit, open the light panel and SWITCH POWER OFF AT SERVICE PANEL.
   b) Clean all grease-laden surfaces frequently. To reduce the risk of fire and to disperse properly, make sure to vent air outside. DO NOT vent exhaust air into wall spaces, attics, crawl spaces or garages.

NOTE - This warranty is invalid without an authorized agent's receipt or if unit is damaged due to misuse, poor installation, improper use, mistreatment, negligence or any other circumstances beyond the control of authorized agents. Any repair carried out without the supervision of authorized agents will automatically void the warranty.

- We will not be held responsible for any damages to personal property or real estate or any bodily injuries whether caused directly or indirectly by the range hood.

⚠WARNING: TO REDUCE THE RISK OF PERSONAL INJURY IN THE EVENT OF A RANGE TOP GREASE FIRE:

1. Keep all fan, baffle/spacer/filter/oil tunnel/oil container and grease-laden surfaces clean. Grease should not be allowed to accumulate on fan, baffle/spacer/filter/oil tunnel/oil container.
2. Always turn hood ON when cooking.
3. Use high settings on cooking range ONLY when necessary.
4. Do not leave cooking range unattended when cooking.
5. Always use cookware and utensils appropriate for the type and amount of food prepared.
6. Use this unit only in the manner intended by the manufacturer.
7. Before servicing, switch power off at service panel and lock service panel (if possible) to prevent power from switching on accidentally.
8. Clean ventilating fan frequently.

What to Do In The Event Of a Range Top Grease Fire

☒ SMOTHER FLAMES with a tight fitting lid, cookie sheet, or metal tray, and then turn off the burner. KEEP FLAMMABLE OR COMBUSTIBLE MATERIAL AWAY FROM FLAMES. If the flames do not go out immediately, EVACUATE THE AREA AND CALL THE FIRE DEPARTMENT or 911.
☒ NEVER PICK UP A BURNING PAN – You May Get Burned.
☒ DO NOT USE WATER, including wet dishcloths or towels – a violent steam blast will result.
☒ Use an extinguisher ONLY if:
   a) You have a Class A, B, C extinguisher and know how to operate it.
   b) The fire is small and contained in the area where it started.
   c) The fire department has been called.
   d) You can fight the fire with your back to an exit.

What to DO If You Smell Gas

☒ Extinguish any open flame.
☒ Do not try to turn on the lights or any type of appliance.
☒ Open all doors and windows to disperse the gas. If you still smell gas, call the Gas Company and Fire Department right away.

⚠ CAUTION

1. For general ventilation use only. Do not use to exhaust hazardous or explosive materials and vapors.
2. To reduce the risk of fire, use only metal ductwork. Sufficient air is needed for proper combustion and exhausting of gases through the flue (chimney) to prevent back drafting.
3. Follow the heating equipment manufacturer's guideline and safety standards such as those published by the National Fire Protection Association (NFPA), and the American Society for Heating, Refrigeration and Air Conditioning Engineers (ASHRAE), and code authorities.
4. Turning any switch on may cause ignition or an explosion.
5. Due to the size and weight of this hood, two people installation is recommended.

⚠ WARNING

ELECTRICAL SHOCK HAZARD – Can result in serious injury or death. Disconnect appliance from electric power before servicing. If equipped, the fluorescent light bulb contains small amounts of mercury, which must be recycled or disposed of according to Local, State, and Federal Codes.

INSTALLATION

PLEASE READ ENTIRE INSTRUCTIONS BEFORE PROCEEDING

Calculation before Installation

To calculate installation, please refer to TABLE 1. (All calculation in inches).

- FOR BUILT-IN / INSERT -

TABLE 1

A = Height of Floor to Ceiling
B = Height of Floor to Counter Top
(Standard: 36")
C = Height of Counter Top to Wood Frame Bottom (Recommended 26" to 30")
D = Height of Wood Frame

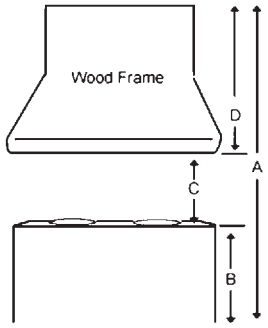

⚠ SAFETY WARNING

- ☒ **HOOD MAY HAVE SHARP EDGES; PLEASE WEAR PROTECTIVE GLOVES IF REMOVING ANY PARTS FOR INSTALLING, CLEANING, OR SERVICING.**
- ☒ **BE CAREFUL WHEN USING ELECTRICAL SCREWDRIVER, DAMAGE TO THE HOOD MAY OCCUR. USING HAND TOOLS IS RECOMMENDED. DO NOT OVER TIGHTEN SCREWS.**
- ☒ **MAKE SURE TO PREVENT ANY DEBRIS FROM ENTERING THE VENT OPENING TO AVOID DAMAGE OR MALFUNCTION.**

INSERT INSTALLATION

Before Installation

1. Read any provided document(s).
2. Test the range hood by temporarily connecting it to an outlet and turning the fan and lights ON.
3. If you run into any problems, contact support@ekonkitchen.com

Venting Requirements

4. This range hood has a top 6" Round exhaust (default).
5. Decide the location of the venting pipe from the hood to the outside. A straight, short vent run will allow the hood to perform more efficiently. Try to avoid elbows, transitions, and long run as much as possible as this may reduce the performance of the hood. Make sure that the duct work leads to the outside.
6. It is recommended to use metal/aluminum duct/pipe with a uniform size (ex. 6" round pipe from range hood to the outside.)
7. If an elbow is necessary, a minimum of 12" straight run is necessary before the elbow.

Clearance

8. Clearance is the distance between the cooktop and the bottom of the range hood. The recommended minimum clearance for this model is 26" and the maximum clearance is 30".
9. It is important to install the hood at the recommended clearance. Installing too low could result in damage and/or fire hazard while installing too high may result in reduced performance and efficiency.

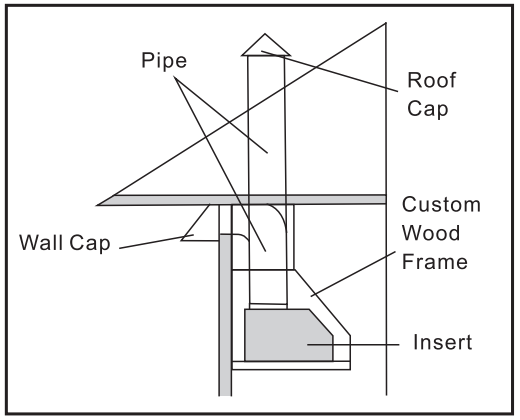

Important: Peel protective film off the hood, if any.

Use duct tape to seal joints between pipe sections.
CAUTION: If moving the cooking range is necessary to install the hood, turn off the power in an electric range at the main electrical box. SHUT OFF THE GAS BEFORE MOVING A GAS RANGE. And use a protective covering to protect cooktop and/or countertop from damage.

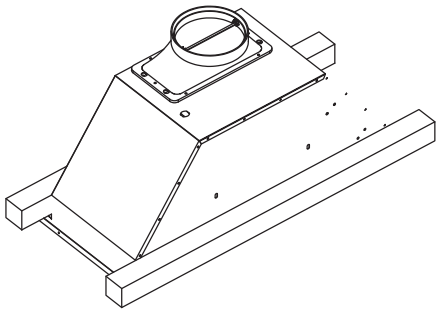

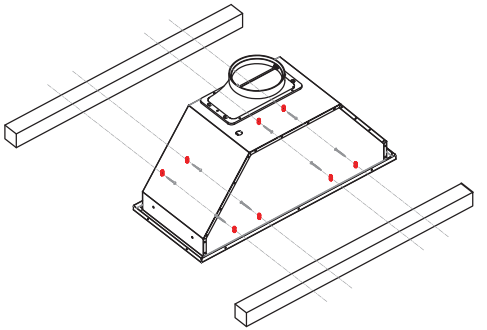

ECPLODED VIEW

NAB01N-G SERIES

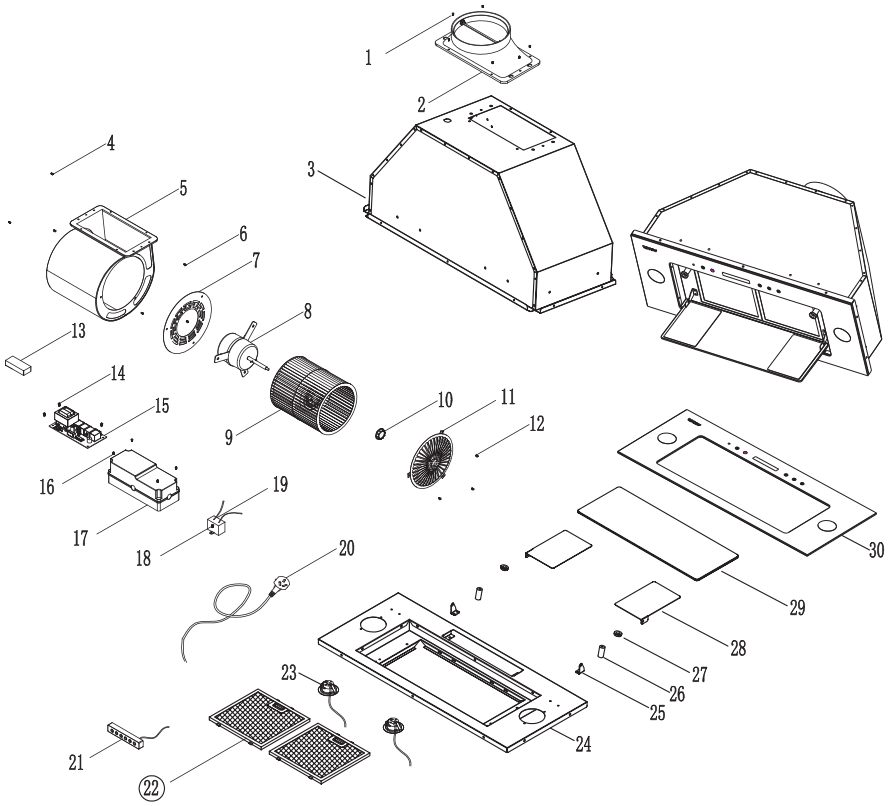

30"Range Hood

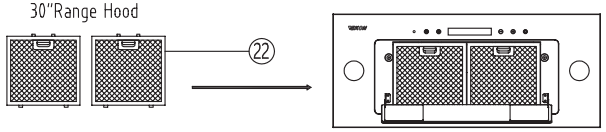

36"Range Hood

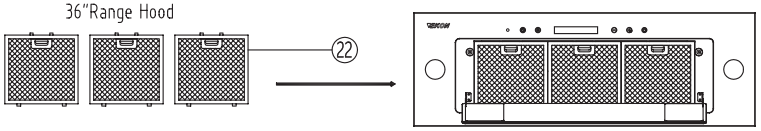

Range Hood

Model No: NAB01N-G

Stainless Steel Range Hood

Power 110V - 125V 60Hz 2.5A
Wattage 236W **Thermally Protected**

Intertek
5006321

Suitable for use in a household cooking area.
Do not install closer than 25.5 inches above the cooking surface.
For residential indoor use only.

Conveniente para el uso en un área que cocina casera.
No instale más de 25,5 pulgadas por encima de la superficie de cocción.
Sólo para uso residencial en interiores.

CONFORMS TO UL STD.507
CERTIFIED TO CSA STD.C22.2 NO.113

Serial No.: Made In China

TROUBLE SHOOTING

Issue	Possible Cause	Solution
After Installation, both motors and lights are not working.	The power is not on.	Make sure the circuit breaker and the unit's power is ON. Use a voltage meter to check the power supply.
	The wire connection is not secure.	Check and tighten wire connection.
	The control switch is defective.	Replace the control switch.
Lights are working, but motor(s) is not.	The motor(s) is defective.	Replace the motor.
	The capacitor(s) is defective.	Replace capacitor(s).
	The control switch is defective.	Replace the control switch.
The range hood is vibrating.	The blower system is not secure.	Tighten the turbine impeller/squirrel cage and air chamber.
	The turbine impeller/squirrel cage is not balanced.	Replace the turbine impeller/squirrel cage.
	Hood is not secured in place.	Check the installation of hood, tighten the mounting bracket.
The motor is working, but the lights are not working.	LED light fixture(s) is defective.	Replace LED light fixture(s)
	The light wiring(s) is loose.	Check wire continuity from Control Switch to LED Driver to LED light fixture(s).
	The control switch or LED light driver is defective.	Replace the control switch or LED light driver.
The range hood is not venting out correctly.	The range hood is installed outside of the manufacture recommended clearance.	Adjust the clearance between the range hoods and cook top to 26" to 30". For Island range hood, the clearance between the range hoods and cook top is 30" to 36".
	There is no make-up air inside the house.	Open the window to enhance the performance of the range hood by creating a sufficient make-up air.
	Obstacle blocking the pipe work.	Remove all obstacles from the duct work.
	The pipe size is smaller than the suggested pipe size.	Change the ducting according to the manufacture suggestion.
Cold air is coming into the home.	The pipe connection is not properly sealed.	Check the pipe installation.
	The damper is not properly installed or is missing from the installation.	Check the damper installation.
	The damper is not installed.	Installing the damper will help eliminate air backflow.

WARRANTY

SPARE PARTS WARRANTY

5 Years warranty for LED lights and switch conntrol

10 Years warranty for motor and blowers

If any problem, please kind send mail to us with your amazon order ID, We would like to send you spare parts immediately with free of cost

Email: support@ekonkitchen.com